NATIONAL AERONAUTICS AND SPACE ADMINISTRATION

NASA CR-
141548

(NASA-CR-141548) INVESTIGATION OF SPACE SHUTTLE VEHICLE 140C CONFIGURATION ORBITER (MODEL 16-0) WHEEL WELL PRESSURE LOADS IN THE ROCKWELL INTERNATIONAL 7.75 X 11 FOOT WIND TUNNEL (OA143) (Chrysler Corp.) 599 p G3/13

N75-28091

Unclas
31381

SPACE SHUTTLE

AEROTHERMODYNAMIC DATA REPORT

JOHNSON SPACE CENTER

HOUSTON, TEXAS

DATA MANagement services

SPACE DIVISION CHRYSLER CORPORATION

June, 1975

DMS-DR-2221
NASA CR-141,548

INVESTIGATION OF SPACE SHUTTLE VEHICLE 140C CONFIGURATION ORBITER (MODEL 16-0) WHEEL WELL PRESSURE LOADS IN THE ROCKWELL INTERNATIONAL 7.75 X 11 FOOT WIND TUNNEL (OA143)

By

R. C. Mennell
Wind Tunnel Programs
Rockwell International Space Division

Prepared under NASA Contract Number NAS9-13247

By

Data Management Services
Chrysler Corporation Space Division
New Orleans, La. 70189

for

Engineering Analysis Division

Johnson Space Center
National Aeronautics and Space Administration
Houston, Texas

WIND TUNNEL TEST SPECIFICS:

Test Number:	NAAL 737
NASA Series Number:	OA143
Model Number:	16-0
Test Dates:	11/7/74 to 11/11/74
Occupancy Hours:	55

FACILITY COORDINATOR:

R. B. Russell
Mail Code BD02
Rockwell International B-1 Division
Los Angeles International Airport
Los Angeles, California 90009

Phone: (213) 670-9151 x3343

AERODYNAMICS ANALYSIS ENGINEER:

S. Kraus
Mail Code AC07
Rockwell International
Space Division
12214 Lakewood Blvd.
Downey, California 90241

Phone: (213) 922-4800

PROJECT ENGINEER:

R. C. Mennell
Mail Code BD02
Rockwell International B-1 Division
Los Angeles International Airport
Los Angeles, California 90009

Phone: (213) 670-9151 x3343

DATA MANAGEMENT SERVICES:

Prepared by: Liaison--D. A. Sarver
Operations--W. B. Meinders

Reviewed by: D. E. Poucher, J. L. Glynn

Approved: N. D. Kemp, Manager
Data Management Services

Concurrence: For J. G. Swider, Manager
Flight Technology Branch

Chrysler Corporation Space Division assumes no responsibility for the data presented other than display characteristics.

INVESTIGATION OF SPACE SHUTTLE VEHICLE

140C CONFIGURATION ORBITER (MODEL 16-0)

WHEEL WELL PRESSURE LOADS IN THE

ROCKWELL INTERNATIONAL 7.75 X 11 FOOT WIND TUNNEL (OA143)

By

R. C. Mennell, Rockwell International Space Division

ABSTRACT

Experimental aerodynamic investigations were conducted on a sting mounted .0405-scale representation of the 140C outer mold line Space Shuttle Orbiter configuration in the Rockwell International 7.75 x 11.00 foot low speed wind tunnel during the time period from 7 to 11 November 1974. NASA designation for this test period was OA143.

The primary test objectives were to define the Orbiter wheel well pressure loading and its effects on landing gear thermal insulation and to investigate the pressure environment experienced by both the horizontal flight nose probe and air vent door probes. In order to accomplish the above objectives both steady state and dynamic pressure values were recorded in the Orbiter nose gear well, left main landing gear well, horizontal flight nose probe, and both left and right air vent door probe, (See Configurations Investigated).

Parametric variations for this test period consisted of testing the landing gear both fully retracted, at gear door positions of 0%, 40%, and 80% open, and fully extended, at a full open door position of 100%. Air vent doors were tested both fully open and fully closed. All testing was

ABSTRACT (Concluded)

conducted both in and out of the presence of the ground located at W. P. 141.13.

For this test period all steady state pressure levels were measured by Statham differential pressure transducers while dynamic pressure levels were recorded by CQL-080-25 Kulite high frequency response pressure sensors. The model was sting mounted through the base region with the model center of rotation located at the main landing gear wheel axis. The nominal angle of attack range was $-4° \leq \alpha \leq 18°$ with pitch polars recorded at sideslip angles of 0°, ± 4°, and ± 8°.

TABLE OF CONTENTS

INDEX OF MODEL FIGURES

NOMENCLATURE
General

SYMBOL	SADSAC SYMBOL	DEFINITION
a		speed of sound; m/sec, ft/sec
C_p	CP	pressure coefficient; $(p_l - p_\infty)/q$
M	MACH	Mach number; V/a
p		pressure; N/m^2, psf
q	Q(NSM) Q(PSF)	dynamic pressure; $1/2\rho V^2$, N/m^2, psf
RN/L	RN/L	unit Reynolds number; per m, per ft
V		velocity; m/sec, ft/sec
α	ALPHA	angle of attack, degrees
β	BETA	angle of sideslip, degrees
ψ	PSI	angle of yaw, degrees
ϕ	PHI	angle of roll, degrees
ρ		mass density; kg/m^3, $slugs/ft^3$
		Reference & C.G. Definitions
A_b		base area; m^2, ft^2
b	BREF	wing span or reference span; m, ft
c.g.		center of gravity
ℓ_{REF} $\bar{c}$	LREF	reference length or wing mean aerodynamic chord; m, ft
S	SREF	wing area or reference area; m^2, ft^2
	MRP	moment reference point
	XMRP	moment reference point on X axis
	YMRP	moment reference point on Y axis
	ZMRP	moment reference point on Z axis

SUBSCRIPTS

b	base
l	local
s	static conditions
t	total conditions
∞	free stream

NOMENCLATURE (Continued)

Body-Axis System

SYMBOL	SADSAC SYMBOL	DEFINITION
C_N	CN	normal-force coefficient; $\frac{\text{normal force}}{qS}$
C_A	CA	axial-force coefficient; $\frac{\text{axial force}}{qS}$
C_Y	CY	side-force coefficient; $\frac{\text{side force}}{qS}$
C_{A_b}	CAB	base-force coefficient; $\frac{\text{base force}}{qS}$ $-A_b(p_b - p_\infty)/qS$
C_{A_f}	CAF	forebody axial force coefficient, $C_A - C_{A_b}$
C_m	CLM	pitching-moment coefficient; $\frac{\text{pitching moment}}{qS\ell_{REF}}$
C_n	CYN	yawing-moment coefficient; $\frac{\text{yawing moment}}{qSb}$
C_ℓ	CBL	rolling-moment coefficient; $\frac{\text{rolling moment}}{qSb}$
		Stability-Axis System
C_L	CL	lift coefficient; $\frac{\text{lift}}{qS}$
C_D	CD	drag coefficient; $\frac{\text{drag}}{qS}$
C_{D_b}	CDB	base-drag coefficient; $\frac{\text{base drag}}{qS}$
C_{D_f}	CDF	forebody drag coefficient; $C_D - C_{D_b}$
C_Y	CY	side-force coefficient; $\frac{\text{side force}}{qS}$
C_m	CLM	pitching-moment coefficient; $\frac{\text{pitching moment}}{qS\ell_{REF}}$
C_n	CLN	yawing-moment coefficient; $\frac{\text{yawing moment}}{qSb}$
C_ℓ	CSL	rolling-moment coefficient; $\frac{\text{rolling moment}}{qSb}$
L/D	L/D	lift-to-drag ratio; C_L/C_D
L/D_f	L/DF	lift to forebody drag ratio; C_L/C_{D_f}

NOMENCLATURE
Additional List

Symbol	Plot Symbol	Definition
CP_{RMS}	CP-RMS	root mean square pressure coefficients obtained from Kulite dynamic pressure sensors = ΔPRMS/q
$CP_{S1\rightarrow3}$	CPS	static pressure coefficients obtain from the horizontal flight probe (#1), the left hand air vent door (#2), and the right hand air vent door (#3), = $(P_{S1-3}-P_o)/q$
$CP_{T1\rightarrow3}$	CPT	total pressure coefficients obtained from the horizontal flight probe (#1), the left hand air vent door (#2), and the right hand air vent door (#3) = $(P_{T1-3}-P_o)/q$
CP_{XXX}	CP	static pressure coefficients obtained from the nose gear wheel well and left main gear wheel well = $(P_{XXX} - P_o)/q$
X/ℓ	X/L	percent of wheel well local length
X/ℓ_D	X/LD	percent of wheel well local depth
X/ℓ_W	X/LW	percent of wheel well local width
δ_F	BDFLAP	body flap deflection angle, degrees
δ_e	ELEVON	elevon deflection angle, degrees
δ_R	RUDDER	rudder deflection. degrees
δ_{SB}	SPDBRK	speed brake deflection, degrees
G.P.	GRDPLN	ground plane position indicator (1 ≡ yes, o ≡ no)
LANDING GEAR	LNGRPS	landing gear position indicator (1 ≡ down, o ≡ up)
L.G. DOOR	LNDGDR	landing gear door position indicator (% fully open; 100, 80, 40, 0)

CONFIGURATIONS INVESTIGATED

The model provided for test period OA143 was an .0405-scale representation of the 140C Space Shuttle Orbiter outer mold line configuration. The basic model was of the blended wing-body design utilizing a double delta wing ($75°/45°\Lambda_{LE}$), full span, dual panel elevons (unswept hingeline and 6" gaps), a centerline vertical tail with rudder and/or speed brake deflection capability, a canopy, a body flap, and an orbital maneuvering system (OMS pods) mounted on the aft fuselage sidewalls adjacent to the vertical tail. Landing gear simulation consisted of both nose and main landing gear with either fully extended or fully retracted capability while the landing gear doors could be positioned at fully closed or 10%, 40%, 80% and 100% of fully open.

Both the nose and the left main landing gear wheel wells were instrumented with 63 static pressure orifices and a maximum of 6 dynamic pressure orifices per figures 2d, 2g, and Table IV. The horizontal flight nose pitot probe consisted of 1 total orifice and 4 static orifices per figure 2h. The left and right air vent probes consisted of one total head orifice and one static pressure orifice located per figure 2h.

For this test period the following nomenclature was used to designate the various model components:

Component	
B_{62}	140C Orbiter basic fuselage
B_{65}	B_{62} with horizontal flight nose probe, air vent doors, and air vent door probes
B_{66}	B_{62} with horizontal flight nose probe and air vent door, probes

CONFIGURATIONS INVESTIGATED (Concluded)

B_{67}	B_{62} with air vent door probes
B_{68}	B_{62} with air vent doors and air vent door probes
C_{12}	140C Orbiter canopy
E_{55}	140C Orbiter dual panel elevon with 6" gaps
F_{10}	140C Orbiter body flap
G_{17}	140C Orbiter landing gear
M_{16}	140C OMS/RCS pods
N_{28}	140C OMS nozzles
W_{127}	140C Orbiter double delta wing
R_5	140C Orbiter rudder
V_8	140C Orbiter centerline vertical tail
X_9	transition grit

TEST FACILITY DESCRIPTION

The North American Aerodynamics Laboratory (NAAL) 7.75 x 11-Foot Wind Tunnel is a continuous flow, closed circuit, single return type tunnel capable of speeds up to 200 miles per hour. The test section is vented to atmospheric pressure and is 7.75 x 11 feet wide by 12 feet in length. Power is supplied by a 1250 horsepower nacelle mounted synchronous motor driving a 19 foot, seven blade, laminated birch propeller. The airspeed is controlled by varying the degree of coupling between the motor and propeller by means of a magnetic clutch. A damping screen and honeycomb section in the settling chamber upstream from the contraction cone (ratio 7.53 to 1) minimizes turbulence in the test section. The NAAL Wind Tunnel has been in operation since June 1943 and calibrations are available over a wide range of test conditions.

Tests may be conducted using a variety of mounting systems; e.g., a single strut, double strut, sting strut, reflection plane, cable suspension, and two dimensional wall. Aerodynamic data may be measured by a planar type external balance system or sting mounted internal balances. An Astrodata Automatic Data Acquisition System is used to collect, multiplex, digitize, and record 50 channels of force and/or pressure data on magnetic tape. This data is then rapidly reduced and plotted using automatic data processing equipment and an automatic digital plotter.

DATA REDUCTION

The aerodynamic steady state and dynamic pressure data presented in this report were measured by ± 2.5 psid Statham steady state differential pressure transducers and by CQL-080-25 Kulite high frequency response pressure sensors. Steady state data from the Statham transducers was recorded directly on IBM magnetic tape for data reduction. Dynamic pressure data was recorded initially on FM magnetic tape, replayed through B & K random noise voltmeters, to obtain RMS pressure levels, and rerecorded on IBM magnetic tape for data reduction.

Corrections applied to the aforementioned data were model tunnel blockage effects on test section dynamic pressure and model support system deflection effects on model angle of attack and angle of sideslip.

A design change was initiated shortly after the completion of this test. It resolved the questions test OA143 was designed to answer. Therefore, only a tabulated listing of the source pressure data is presented. It is arranged in the following manner:

DATA REDUCTION (Concluded)

TABLE I.

TEST : 0A143 NAAL 737 DATE : 12/20/74

TEST CONDITIONS

MACH NUMBER	REYNOLDS NUMBER (per foot)	DYNAMIC PRESSURE (psf)	STAGNATION TEMPERATURE (degrees Fahrenheit)
0.20	1.42×10^6/FT.	60 #/Ft^2	80 → 120°F
0.23	1.60×10^6/FT.	74 #/Ft^2	80 → 120°F

BALANCE UTILIZED: N/A

	CAPACITY:	ACCURACY:	COEFFICIENT TOLERANCE:
NF			
SF			
AF			
PM			
RM			
YM			

COMMENTS:

TABLE II.

TEST: DA143 NAAL 737 — DATA SET/RUN NUMBER COLLATION SUMMARY — DATE: 11/26/74

DATA SET IDENTIFIER	CONFIGURATION	SCHD. α	SCHD. β	PARAMETERS/VALUES δF	δe	δR	δSB	G.P.	LANDING GEAR	L.G. DOOR	NO. OF RUNS	MACH NUMBERS .20	.23
RFC101	② + ⑤ + ⑥	A	0	-11.7	+5	0	25	YES	DOWN	100	1	1	
02			-4									2	
03			-8									3	
04			+4									4	
05			+8									5	
06			0		+10							6	
07			-4									7	
08			-8									8	
09			+4									9	
10			+8									10	
11			0		+15							11	
12			-4									12	
13			-8									13	
14			+4									14	
15			+8									15	
16			0					NO					16
17			-4										17
18			-8										18

TEST RUN NUMBERS

1 7 13 19 25 31 37 43 49 5 61 67 75 76

CP

α OR β SCHEDULES: $\alpha(A) = 0, 5, 10, 15, 18°$; $\alpha(B) = -4° \rightarrow +18°, \Delta\alpha = 2°$

COEFFICENTS: IDVAR (1) IDVAR (2) NDV — $i \equiv A, C, E, F, G, H, I, J, K, L, M, N$

① B65 C12 G17 M16 N28 F10 W127 E55 V8 R5 X9
② B66
③ B67
④ B68

⑤ WHEEL WELL PRESSURE LEVELS RECORDED
⑥ NOSE PROBE + AIR VENT DOOR PRESSURES RECORDED

TABLE II. - Continued.

TEST: OA143 NAAL 737 — DATA SET/RUN NUMBER COLLATION SUMMARY — DATE: 11/26/74

DATA SET IDENTIFIER	CONFIGURATION	SCHD. α	SCHD. β	δF	δe	δR	δSB	G.P.	LANDING GEAR	L.G. DOOR	NO. OF RUNS	MACH NUMBERS .20	MACH NUMBERS .23	TEST RUN NUMBERS
RFC 19	② + ⑤ + ⑥	A	+4	-11.7	+15	0	25	NO	DOWN	100	1		19	19
20			+8										20	20
21			0		+10								21	21
22			-4										22	22
23			-8										23	23
24			+4										24	24
25			+8										25	25
26									UP	0			26	26
27										40			27	27
29										80			29	29
30			0		+5				DOWN	100			30	30
31			-4										31	31
32			-8										32	32
33			+4										33	33
34			+8										34	34
35	① + ⑤ + ⑥		0										35	35
36			-4										36	36
37			-8										37	37

1 7 13 19 25 31 37 43 49 55 61 67 75 76

COEFFICENTS — IDVAR (1) — IDVAR (2) — NDV

α OR β SCHEDULES

α(A) = 0, 5, 10, 15, 18°

α(B) = -4 → 18°, Δα = 2°

① B65 C2 G17 M16 N28 F10 W127 E55 V3 R5 X9

② B66

③ B67

④ B68

⑤ WHEEL WELL PRESSURE LEVELS RECORDED

⑥ NOSE PROBE + AIR VENT DOOR PRESSURES RECORDED

TABLE II. - Continued.

TEST: OA143 NAAL 737 — DATA SET/RUN NUMBER COLLATION SUMMARY — DATE: 11/26/74

DATA SET IDENTIFIER	CONFIGURATION	SCHD. α	SCHD. β	PARAMETERS/VALUES δF	δe	δR	δSB	G.P.	LANDING GEAR	L.G. DOOR	NO. OF RUNS	MACH NUMBERS .20	.23	TEST RUN NUMBERS
RFC 38	①+⑤+⑥	A	+4	11.7	+5	0	25	NO	DOWN	100	1		38	38
39			+8										39	39
40	②	B	0						UP	0			40	40
41			-4										41	41
42			-8										42	42
43			+4										43	43
44			+8										44	44
46	③		0										46	46
47			-4										47	47
48			-8										48	48
49			+4										49	49
50			+8										50	50
51	④		0										51	51
52			-4										52	52
53			-8										53	53
54			+4										54	54
55			+8										55	55
56	③+⑥+⑤		0						DOWN	100			56	56

1 7 13 19 25 31 37 43 49 55 61 67 75 76

α OR β SCHEDULES: α(A) = 0, 5, 10, 15, 18° ; α(B) = -4 → +18°, Δα = 2°

COEFFICENTS

IDVAR (1) IDVAR (2) NDV

① B65 C12 G17 M16 N28 F10 W127 E55 V8 R5 X9

② B66

③ B67

④ B68

⑤ WHEEL WELL PRESSURE LEVELS RECORDED

⑥ NOSE PRESS + AIR VENT DUCT PRESSURES RECORDED.

TABLE II. - Concluded.

TEST: OA143 NAAL 737 — DATA SET/RUN NUMBER COLLATION SUMMARY — DATE: 11/26/74

DATA SET IDENTIFIER	CONFIGURATION	SCHD. α	SCHD. β	δF	δe	δR	δSB	G.P.	LANDING GEAR	L.G. DOOR	NO. OF RUNS	MACH NUMBERS .20	MACH NUMBERS .23	TEST RUN NUMBERS
RFC57	③	B	4	11.7	+5	0	25	NO	DOWN	100	1			57
58			-8											58
59			+4											59
60	③ + ⑤ + ⑥		+8											60

G.P. ≡ GRDPLN ~ GROUND PLANE IN POSITION (1=YES, 0=NO)
LANDING GEAR ≡ LNGRPS ~ LANDING GEAR POSITION (1=DOWN, 0=UP)
L.G. DOOR ≡ LNDGDR ~ LANDING GEAR DOOR POSITION (% OPEN; 100, 80, 40, 0)

1 7 13 19 25 31 37 43 49 55 61 67 75 76

COEFFICENTS — IDVAR (1) — IDVAR (2) — NDV

α OR β SCHEDULES
α(A) = 0, 5, 10, 15, 18°
α(B) = -4° → +18°, Δα = 2°

① B105 C12 G17 M16 N28 F10 W127 E55 V8 R5 X9
② B106
③ B107
④ B108

⑤ WHEEL WELL PRESSURE LEVELS RECORDED
⑥ NOSE PROBE + AIR VENT DOOR PRESSURES RECORDED

TABLE III (MODEL DIMENSIONAL DATA)

MODEL COMPONENT : BODY - B_{62}

GENERAL DESCRIPTION : Configuration 140C orbiter fuselage, MCR 200-R4. Similar to 140A/B fuselage except aft body revised and improved midbody-wing-root fairing, X_o = 940 to X_o = 1040.

MODEL SCALE · 0.0405

DRAWING NUMBER : VL70-000140C, --000202C, -000205A -000200B, -000203

DIMENSIONS :	FULL SCALE	MODEL SCALE
Length (IML: Fwd Sta X_o=238), In.	1290.3	52.257
Length (OML: Fwd Sta X =235), In.	1293.3	52.379
Max Width (@ X_o = 1528.3), In.	264.0	10.692
Max Depth (@ X_o = 1464), In.	250.00	10.125
Fineness Ratio	4.899	4.899
Area - Ft^2		
Max. Cross-Sectional	340.885	0.559
Planform		
Wetted		
Base		

TABLE III (CONT'D)

MODEL COMPONENT : BODY - B_{65}

GENERAL DESCRIPTION : Configuration 140C orbiter fuselage. Similar to 140A/B fuselage except aft body revised and midbody-wing glove area modified. B_{65} has the addition of horizontal flight test nose probe, air vent doors, and air vent door probes, per Figure 2h.

MODEL SCALE: 0.0405

DRAWING NUMBER : VL70-000140C, -000202C -000205A -000200B, -000203

DIMENSIONS :	FULL SCALE	MODEL SCALE
Length (IML: Nose @ X_o=238), In.	1290.30	52.257
Length (OML: Nose @ X_o=235), In.	1293.30	52.379
Max Width (@ X_o = 1528.3), In.	264.00	10.692
Max Depth (@ X_o = 1464), In.	250.00	10.125
Fineness Ratio	4.899	4.899
Area - Ft^2		
Max. Cross-Sectional	340.89	0.559
Planform		
Wetted		
Base		

TABLE III (CONT'D)

MODEL COMPONENT : BODY - B_{66}

GENERAL DESCRIPTION : Configuration 140C orbiter fuselage. Similar to 140A/B fuselage except aft body revised and midbody-wing glove area modified. B_{66} has the addition of horizontal flight test nose probe and air vent door probes per figure 2h. Air vent doors are closed.

MODEL SCALE: 0.0405

DRAWING NUMBER : VL70-000140C, -000202C, -000205A -000200B, -000203

DIMENSIONS :	FULL SCALE	MODEL SCALE
Length (IML Nose @ X_o=238), In.	1290.30	52.257
Length (OML Nose @ X =235), In.	1293.30	52.379
Max Width (@ X_o = 1528.3), In.	264.00	10.692
Max Depth (@ X_o = 1464), In.	250.00	10.125
Fineness Ratio	4.899	4.899
Area - Ft^2		
Max. Cross-Sectional	340.89	0.559
Planform		
Wetted		
Base		

TABLE III (CONT'D)

MODEL COMPONENT : BODY - B_{67}

GENERAL DESCRIPTION : Configuration 140C orbiter fuselage. Similar to 140A/B fuselage except aft body revised and midbody-wing glove area modified. B_{67} has the addition of air vent door probes per Figure 2h. Air vent doors are closed.

MODEL SCALE: 0.0405

DRAWING NUMBER : VL70-000140C , -000202C, -000205A -000200B, -000203

DIMENSIONS :	FULL SCALE	MODEL SCALE
Length (IML: Nose @ X_o=238), In.	1290.30	52.257
Length (OML: Nose @ X_o=235), In.	1293.30	52.379
Max Width (@ X_o = 1528.3). In.	264.0	10.692
Max Depth (@ X_o = 1464), In.	250.00	10.125
Fineness Ratio	4.899	4.899
Area - Ft^2		
Max. Cross-Sectional	340.89	0.559
Planform		
Wetted		
Base		

TABLE III (CONT'D)

MODEL COMPONENT : BODY - B_{68}

GENERAL DESCRIPTION : Configuration 140C orbiter fuselage. Similar to 140A/B fuselage except aft body revised and midbody-wing glove area modified. B_{68} has the addition of air vent doors and air vent door probes per figure 2h.

MODEL SCALE: 0.0405

DRAWING NUMBER : VL70-000140C, -000202C, -000205A -000200B, -000203

DIMENSIONS :	FULL SCALE	MODEL SCALE
Length (IML: Nose @ X_o=238), In.	1290.30	52.257
Length (OML: Nose @ X_o=235), In.	1293.30	52.379
Max Width (@ X_o = 1528.3), In.	264.0	10.692
Max Depth (@ X = 1464), In.	250.00	10.125
Fineness Ratio	4.899	4.899
Area - Ft^2		
Max. Cross-Sectional	340.89	0.559
Planform		
Wetted		
Base		

TABLE III (CONT'D)

MODEL COMPONENT : CANOPY - C_{12}

GENERAL DESCRIPTION : Configuration 140C orbiter canopy, vehicle cabin No. 31 updated to MCR 200-R4. Used with fuselage B_{62}.

MODEL SCALE: 0.0405

DRAWING NUMBER : VL70-000140C, -000202B, -000204

DIMENSIONS :	FULL SCALE	MODEL SCALE
Length (X_o=434.643-578), In.	143.357	5.806
Max Width (@ X_o = 513.127), In.	152.412	6.173
Max Depth (@ Z_o=501 to 449.39), In.	51.61	2.090
Fineness Ratio		
Area		
Max. Cross-Sectional		
Planform		
Wetted		
Base		

TABLE III (CONT'D)

MODEL COMPONENT: ELEVON - E_{55}

GENERAL DESCRIPTION: Configuration 140C dual panel elevon. Elevon hinge-line at X_o = 1387. Elevon split line at Y_o = 281 to 312.5. Upper wing/elevon gap sealed by flipper doors.

MODEL SCALE: 0.0405

DRAWING NUMBER: 1 VL70-000140C, -006089, -000200B, -006092

DIMENSIONS:	FULL-SCALE	MODEL SCALE
Area - Ft^2	210.00	0.344
Span (equivalent), In.	349.20	14.143
Inb'd equivalent chord, In.	118.0	4.779
Outb'd equivalent chord, In.	55.19	2.235
Ratio movable surface chord/ total surface chord		
At Inb'd equiv. chord	0.210	0.210
At Outb'd equiv. chord	0.400	0.400
Sweep Back Angles, degrees		
Leading Edge	0.0	0.0
Tailing Edge	- 10.056	- 10.056
Hingeline	0.00	0.00
Area Moment (Product of area & $\bar{c}$) ~~Normal to hingeline~~, Ft^3	1587.25	0.1054
Mean Aerodynamic Chord, In.	90.70	3.673

TABLE III (CONT'D)

MODEL COMPONENT : BODY FLAP - F_{10}

GENERAL DESCRIPTION : Configuration 140C body flap. Hingeline located at X_o = 1532, Z_o = 287.

MODEL SCALE: 0.0405

DRAWING NUMBER : VL70-000140C, -355114

DIMENSIONS :	FULL SCALE	MODEL SCALE
Length (X_o=1525.5- 1613), In.	87.50	3.544
Max Width (@ L.E., X_o=1525.5), In.	256.00	10.368
Max Depth (X_o = 1532), In.	19.798	0.802
Fineness Ratio		
Area - Ft^2		
Max. Cross-Sectional	35.196	0.058
Planform	135.00	0.220
Wetted		
Base (X_o = 1613)	4.89	0.008

TABLE III. (CONT'D)

MODEL COMPONENT: Landing Gear - G_{17}

GENERAL DESCRIPTION: Main and nose landing gear, including gear and gear doors.

Model Scale = 0.0405 MODEL DWG: SS-A01451

Drawing Number: SS-A01451

DIMENSIONS:	FULL SCALE	MODEL SCALE
NOSE LANDING GEAR		
STRUT	Yoked	Yoked
Number	Single Strut	Single Strut
Diameter in.	63.704	
Length in.		
Exposed	63.704	2.580
Pivot Point to Wheel Axis	76.543	3.100
Pivot Point Location in.		
X_o	375.506	15.208
Z_o	298.000	12.069
WHEELS		
Number	Two	Two
Diameter in.	32.099	1.300
Width in.	9.877	0.400
Axis Location in.		
X_o	375.506	15.208
Y_o	0.0	0.0
Z_o	221.457	8.969
DOORS		
Side		
Number	Two	Two
Length in.	111.111	4.500
Height in.	20.988	0.850
Area Ft^2		
Hingeline Location		
X_o		
Y_o	±28.815	± 1.167
Z_o	301.235	12.200
End		
Number		
Length in.		
Depth in.		
Area Ft^2		
Hingeline Location		
X_o		
Y_o		
Z_o		

TABLE III (CONT'D)

MODEL COMPONENT: Landing Gear - G (Continued) G17

DIMENSIONS:	FULL SCALE	MODEL SCALE
MAIN LANDING GEAR - EACH		
STRUT	Yoked	Yoked
Number	Single Strut	Single Strut
Diameter in.		
Length in.		
Exposed	87.901	3.560
Pivot Point to Wheel Axis	108.148	4.380
Pivot Point Location in.		
X_o	1179.926	47.787
Z_o	282.716	11.450
WHEELS		
Number	Two	Two
Diameter in.	49.383	2.000
Width in.	17.778	0.720
Axis Location in.		
X_o	1172.025	47.467
Y_o		
Z_o	174.815	7.080
DOORS		
Side		
Number	One	One
Length in.	151.012	6.116
~~Height xx in.~~ Width - In.	62.025	2.512
Area Ft^2		
Hingeline Location		
X_o		
Y_o	±163.309	± 6.614
Z_o		
END		
Number		
Length in.		
Depth in.		
Area Ft^2		
Hingeline Location		
X_o		
Y_o		
Z_o		

TABLE III (CONT'D)

MODEL COMPONENT : OMS POD - M_{16}

GENERAL DESCRIPTION : Configuration 140C orbiter OMS pod - short pod.

MODEL SCALE: 0.0405

DRAWING NUMBER : VL70-008401, -008410

DIMENSIONS :	FULL SCALE	MODEL SCALE
Length (OMS Fwd Sta. X_o=1310.5), In.	258.50	10.469
Max Width (@ X_o = 1511), In.	136.8	5.540
Max Depth (@ X_o = 1511), In.	74.70	3.025
Fineness Ratio	2.484	2.484
Area - Ft^2		
Max. Cross-Sectional	58.864	0.097
Planform		
Wetted		
Base		

TABLE III. - Continued.

MODEL COMPONENT: NOZZLES - (N_{28})

GENERAL DESCRIPTION: Configuration 140 A/B Orbiter OMS Nozzle

MODEL SCALE = .0405 Model Drawing No. SS-A00106

DRAWING NO. VL70-000140A

DIMENSIONS	FULL SCALE	MODEL SCALE
Mach No.		
Length ~ in.		
Gimbal Point to Exit Plane		
Throat to Exit Plane		
Diameter ~ in.		
Exit		
Throat		
Inlet		
Area ~ ft^2.		
Exit		
Throat		
Gimbal Point (station) ~ in.		
X	1518.0	61.479
Y	± 88.0	±3.564
Z	492.0	19.926
Null Position ~ deg.		
Pitch	15° 49'	15° 49'
Yaw	12° 17'	12° 17'

TABLE III (CONT'D)

MODEL COMPONENT: RUDDER - R_5

GENERAL DESCRIPTION: Configuration 140C Orbiter rudder (identical to Configuration 140A/B rudder).

MODEL SCALE: 0.0405

DRAWING NUMBER: VL70-000146B, -000095

DIMENSIONS:	FULL-SCALE	MODEL SCALE
Area - Ft^2	100.15	0.164
Span (equivalent), In.	201.00	8.141
Inb'd equivalent chord, In.	91.585	3.709
Outb'd equivalent chord, In.	50.833	2.059
Ratio movable surface chord/ total surface chord		
At Inb'd equiv. chord	0.400	0.400
At Outb'd equiv. chord	0.400	0.400
Sweep Back Angles, degrees		
Leading Edge	34.83	34.83
Tailing Edge	26.25	26.25
Hingeline	34.83	34.83
Area Moment (Product of area & $\bar{c}$) ~~(Normal to hingeline)~~, Ft^3	610.92	0.0406
Mean Aerodynamic Chord, In.	73.2	2.965

TABLE III (CONT'D)

MODEL COMPONENT: VERTICAL - V_8

GENERAL DESCRIPTION: Configuration 140A/B orbiter vertical tail.

MODEL SCALE: 0.0405 MODEL DRAWING: SS-A00148, Release 6

DRAWING NUMBER: VL70-000146A

DIMENSIONS:	FULL SCALE	MODEL SCALE
TOTAL DATA		
Area (Theo) - Ft^2		
Planform	413.253	0.678
Span (Theo) - In.	315.720	12.787
Aspect Ratio	1.675	1.675
Rate of Taper	0.507	0.507
Taper Ratio	0.404	0.404
Sweep-Back Angles, Degrees.		
Leading Edge	45.00	45.00
Trailing Edge	26.2	26.2
0.25 Element Line	41.130	41.130
Chords:		
Root (Theo) WP	268.500	10.874
Tip (Theo) WP	108.470	4.393
MAC	199.808	8.092
Fus. Sta. of .25 MAC	1463.50	59.272
W.P. of .25 MAC	635.522	25.738
B.L. of .25 MAC	0.00	0.00
Airfoil Section		
Leading Wedge Angle - Deg.	10.00	10.00
Trailing Wedge Angle - Deg.	14.920	14.920
Leading Edge Radius	2.00	2.00
Void Area	13.17	0.022
Blanketed Area	0.0	0.0-

ORIGINAL PAGE IS
OF POOR QUALITY

TABLE III (CONT'D)

MODEL COMPONENT: WING-W_{127}

GENERAL DESCRIPTION: Configuration 140C orbiter wing, MCR 200-R4. Similar to 140A/B wing W_{116} but with refinements. Improved wing-boot-midbody fairing (X_o = 940 to X_o = 1040): elevon split line relocated from Y_o = 281 to Y_o = 312.5

MODEL SCALE: -.0405

TEST NO. DWG. NO. VL70-000140C, -000200B

DIMENSIONS:	FULL-SCALE	MODEL SCALE
TOTAL DATA		
Area (Theo.) Ft^2		
Planform	2690.00	4.412
Span (Theo In.	936.68	37.936
Aspect Ratio	2.265	2.265
Rate of Taper	1.177	1.177
Taper Ratio	0.200	0.200
Dihedral Angle, degrees	3.500	3.500
Incidence Angle, degrees	0.500	0.500
Aerodynamic Twist, degrees	3.000	3.000
Sweep Back Angles, degrees		
Leading Edge	45.000	45.000
Trailing Edge	- 10.056	- 10.056
0.25 Element Line	35.209	35.209
Chords:		
Root (Theo) B.P.O.O.	689.24	27.914
Tip, (Theo) B.P.	137.85	5.583
MAC	474.81	19.230
Fus. Sta. of .25 MAC	1136.83	46.042
W.P. of .25 MAC	290.58	11.769
B.L. of .25 MAC	182.13	7.376
EXPOSED DATA		
Area (Theo) Ft^2	1751.50	2.873
Span, (Theo) In. BP108	720.68	29.188
Aspect Ratio	2.059	2.059
Taper Ratio	0.245	0.245
Chords		
Root BP108	562.09	22.765
Tip 1.00 $\frac{b}{2}$	137.85	5.583
MAC	392.83	15.910
Fus. Sta. of .25 MAC	1185.98	48.032
W.P. of .25 MAC	294.30	11.919
B.L. of .25 MAC	251.77	10.197
Airfoil Section (Rockwell Mod NASA) XXXX-64		
Root $\frac{b}{2}$ =	0.113	0.113
Tip $\frac{b}{2}$ =	0.120	0.120
Data for (1) of (2) Sides		
Leading Edge Cuff		
Planform Area Ft^2	113.18	0.186
Leading Edge Intersects Fus M. L. @ Sta	500.00	20.250
Leading Edge Intersects Wing @ Sta	1024.00	41.472

TABLE III (CONL'D)

MODEL COMPONENT: TRANSITION GRIT - X_9

GENERAL DESCRIPTION: Grit located on model nose and all swept surfaces to provide forced boundary layer transition.

NOMINAL GRIT DIAMETER - In.	
Fuselage	0.0054
All surfaces except fuselage	0.0076
STRIP THICKNESS, - In.	0.100
LOCATION:	
Aft of local leading edge - In. (streamwise)	1.00

TABLE IV.

NOSE LANDING GEAR WHEEL WELL PRESSURE TAPS

		NOSE ~ FRONT WALL ~ PERCENT WIDTH					NO. OF TAPS
		5	25	50	75	95	
PERCENT DEPTH	5	P106		P105		P104	3
	50	P107 *		P109		P103 *	3
	95	P108		P101		P102	3
						SUB~TOTAL	9

		NOSE ~ AFT WALL ~ PERCENT WIDTH					NO. OF TAPS
		5	25	50	75	95	
PERCENT DEPTH	5	P160		P159		P158	3
	50	P161		P163		P157 *	3
	95	P162		P155		P156	3
						SUB~TOTAL	9

		NOSE ~ LEFT SIDEWALL ~ PERCENT LENGTH					NO. OF TAPS
		5	25	50	75	95	
PERCENT DEPTH	5	P112	P121	P130	P139	P148	5
	50	P111	P120	P129 *	P138	P147	5
	95	P110	P119	P128	P137	P146	5
						SUB~TOTAL	15

		NOSE ~ TOP WALL ~ PERCENT LENGTH					NO. OF TAPS
		5	25	50	75	95	
PERCENT WIDTH	5	P115	P124	P133	P142	P151	5
	50	P114	P123	P132	P141	P150	5
	95	P113	P122	P131	P140	P149	5
						SUB~TOTAL	15

		NOSE ~ RIGHT SIDEWALL ~ PERCENT LENGTH					NO. OF TAPS
		5	25	50	75	95	
PERCENT DEPTH	5	P116	P125	P134	P143	P152	5
	50	P117	P126	P135 *	P144	P153	5
	95	P118	P127	P136	P145	P154	5
						SUB~TOTAL	15

* THESE TAPS HAVE ASSOCIATED KULITES PK XXX

TABLE IV. (Concluded)

MAIN LANDING GEAR WHEEL WELL PRESSURE TAPS

		MAIN ~ FRONT WALL ~ PERCENT WIDTH					NO. OF TAPS
		5	25	50	75	95	
PERCENT DEPTH	5	P206		P205		P204	3
	50	P207 *		P209		P203 *	3
	95	P208		P201		P202	3
						SUB~TOTAL	9

		MAIN ~ AFT WALL ~ PERCENT WIDTH					NO. OF TAPS
		5	25	50	75	95	
PERCENT DEPTH	5	P260		P259		P258	3
	50	P261 *		P263		P257 *	3
	95	P262		P255		P256	3
						SUB~TOTAL	9

		MAIN ~ LEFT SIDEWALL ~ PERCENT LENGTH					NO. OF TAPS
		5	25	50	75	95	
PERCENT DEPTH	5	P212	P221	P230	P239	P248	5
	50	P211	P220	P229 *	P238	P247	5
	95	P210	P219	P228	P237	P246	5
						SUB~TOTAL	15

		MAIN ~ TOP WALL ~ PERCENT LENGTH					NO. OF TAPS
		5	25	50	75	95	
PERCENT WIDTH	5	P215	P224	P233	P242	P251	5
	50	P214	P223	P232	P241	P250	5
	95	P213	P222	P231	P240	P249	5
						SUB~TOTAL	15

		MAIN ~ RIGHT SIDEWALL ~ PERCENT LENGTH					NO. OF TAPS
		5	25	50	75	95	
PERCENT DEPTH	5	P216	P225	P234	P243	P252	5
	50	P217	P226	P235 *	P244	P253	5
	95	P218	P227	P236	P245	P254	5
						SUB~TOTAL	15

* THESE TAPS HAVE ASSOCIATED KULITES PK XXX

Notes:

1. Positive directions of force coefficients, moment coefficients, and angles are indicated by arrows
2. For clarity, origins of wind and stability axes have been displaced from the center of gravity

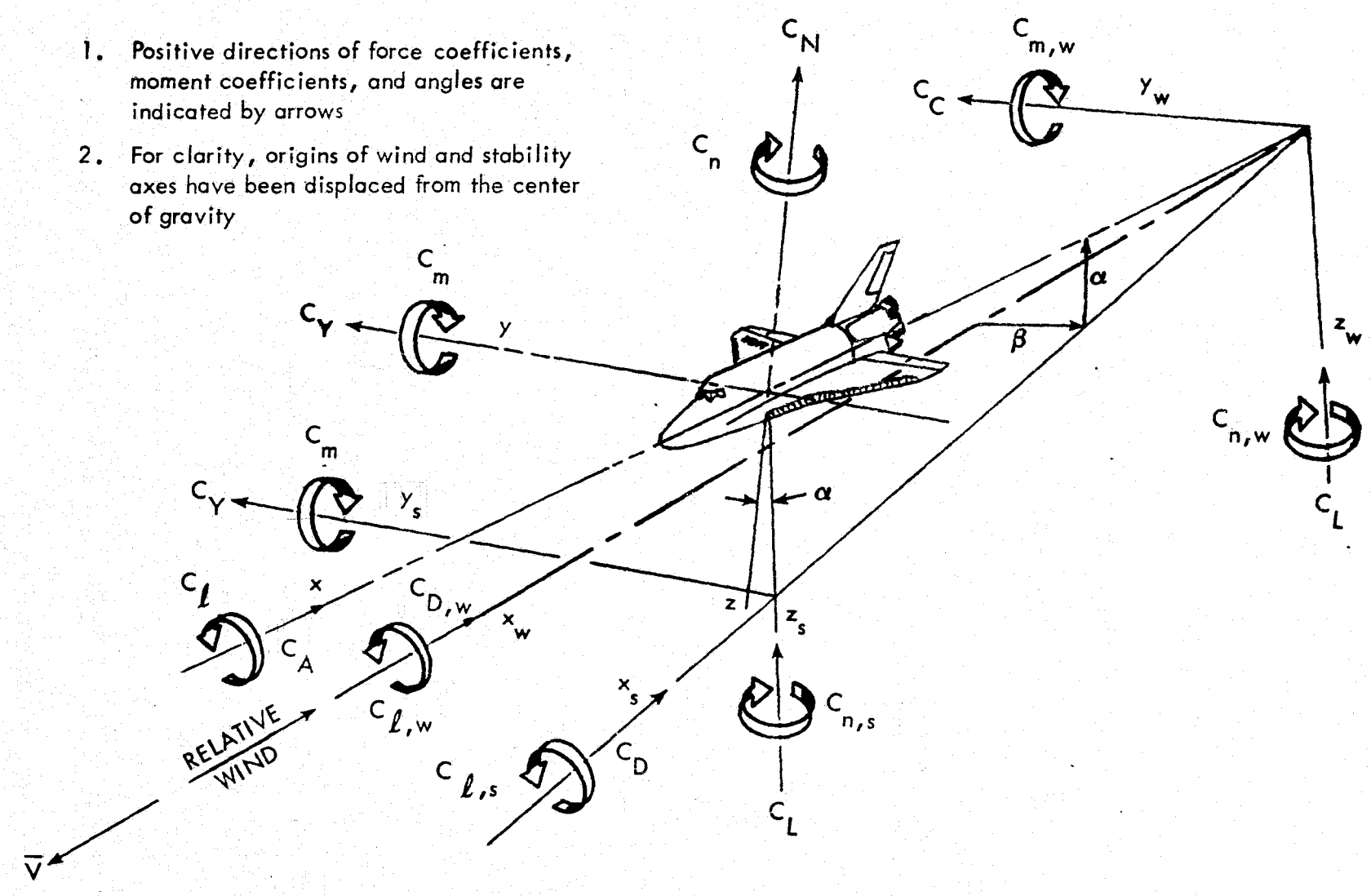

Figure 1. - Axis systems.

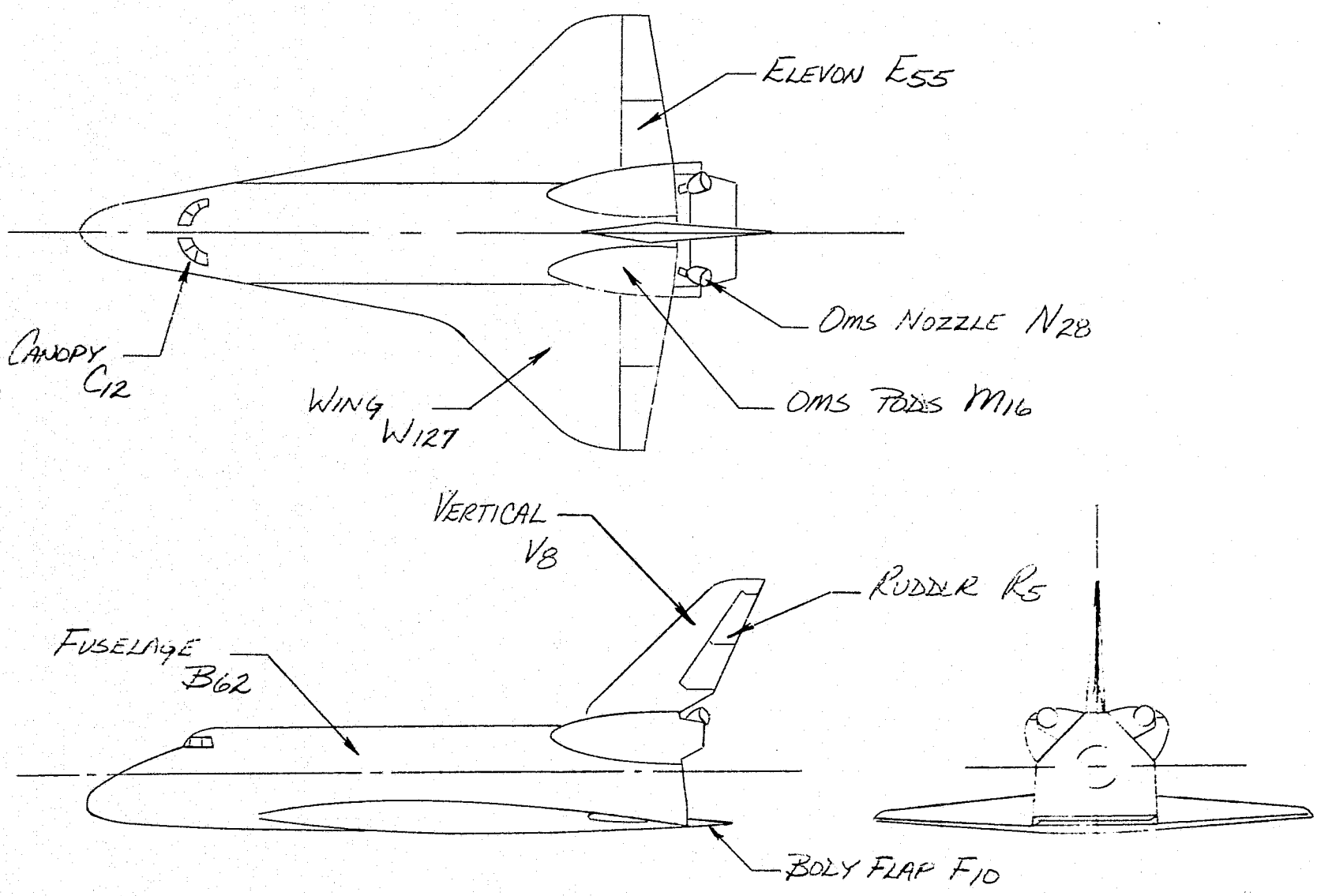

a. 140C Orbiter General Arrangement

Figure 2. - Model sketches.

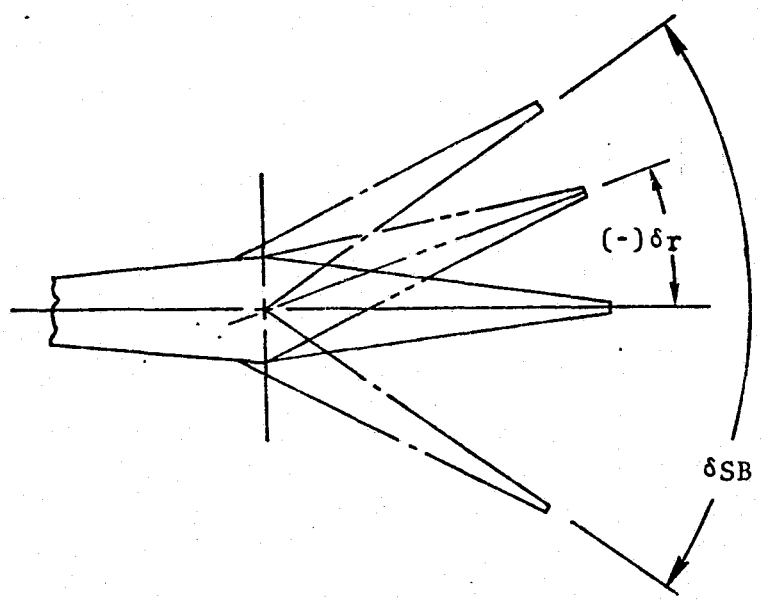

Rudder and Speed Brake Deflections

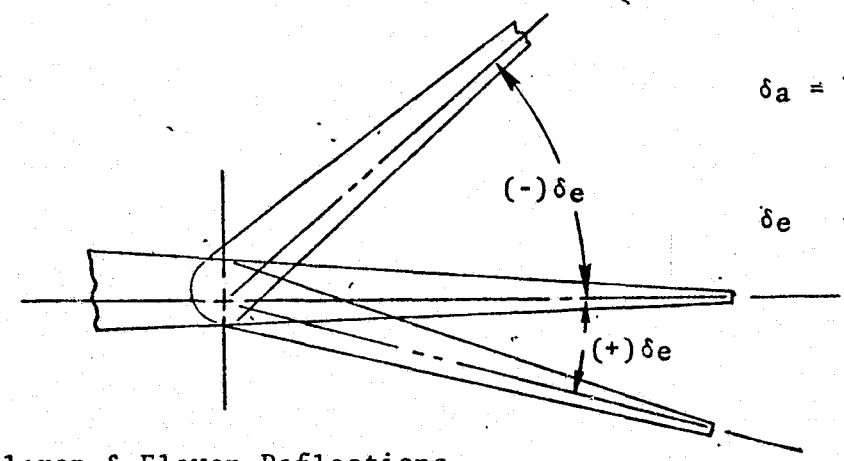

$$\delta a = \frac{\delta eL - \delta eR}{2}$$

$$\delta e \quad \frac{\delta e_L + \delta e_R}{2}$$

Aileron & Elevon Deflections

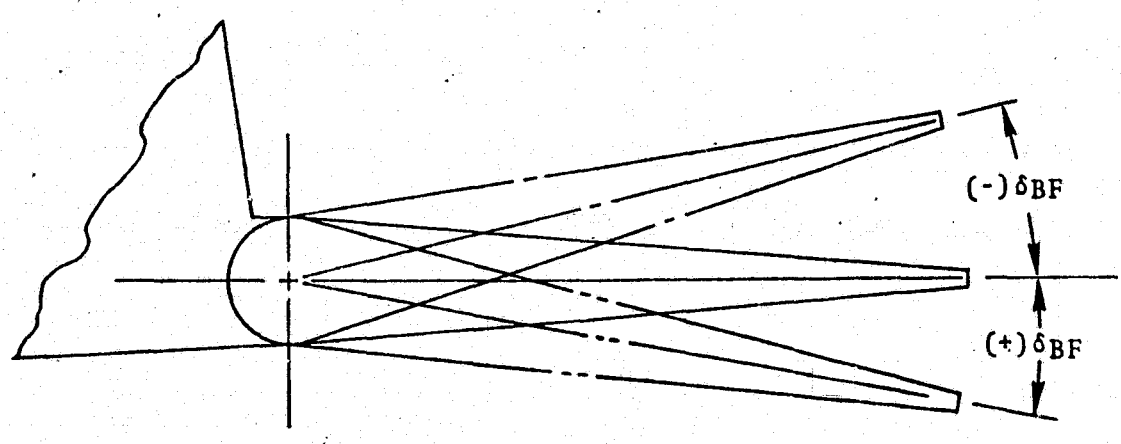

Body Flap Deflections

b. Sign Convention for Control Surfaces

Figure 2. - Continued.

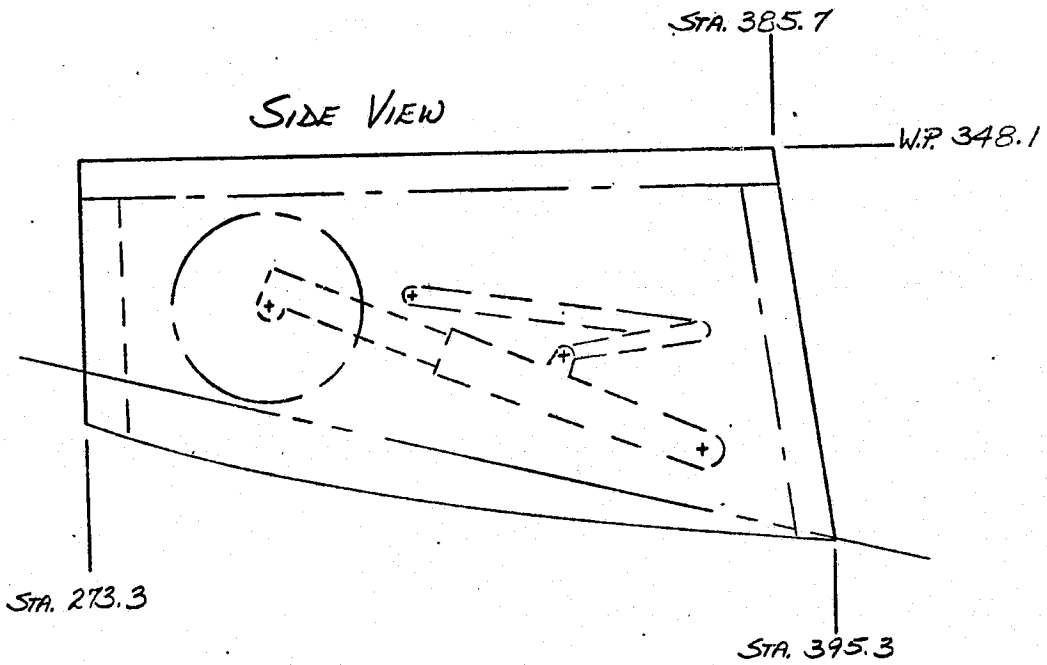

FIGURE 2c. ORBITER NOSE LANDING GEAR

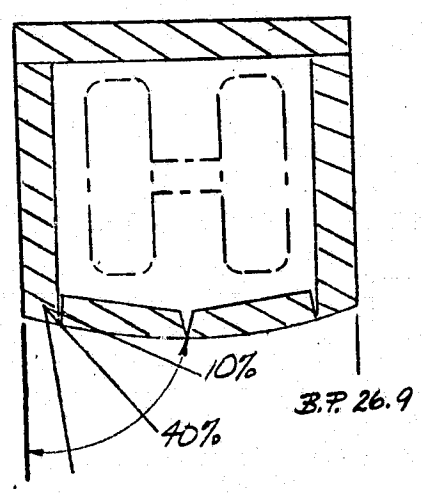

c. Orbiter Nose Landing Gear

Figure 2. - Continued.

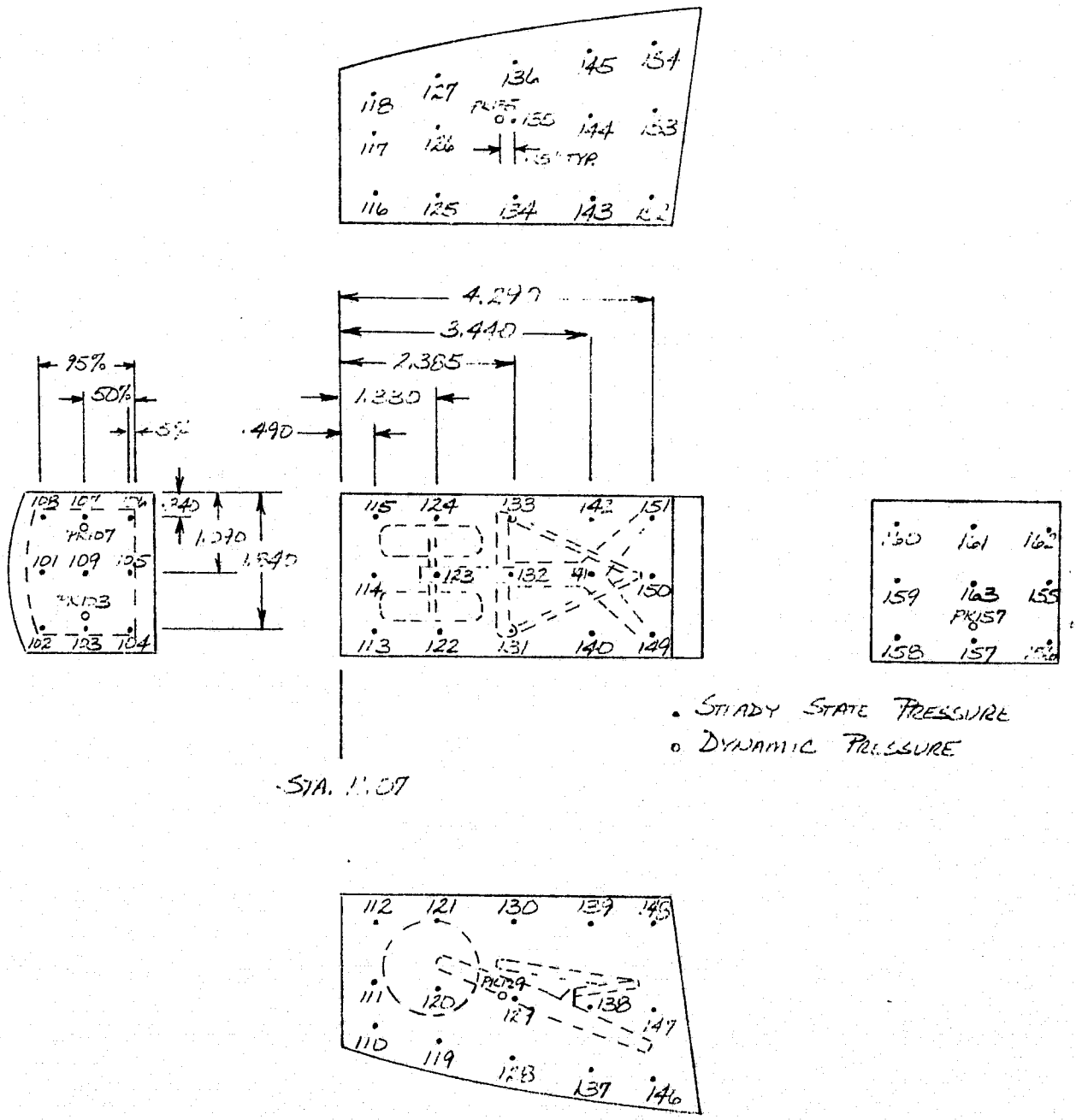

d. Nose Landing Gear Wheel Well Pressure Tap Locations

Figure 2. - Continued.

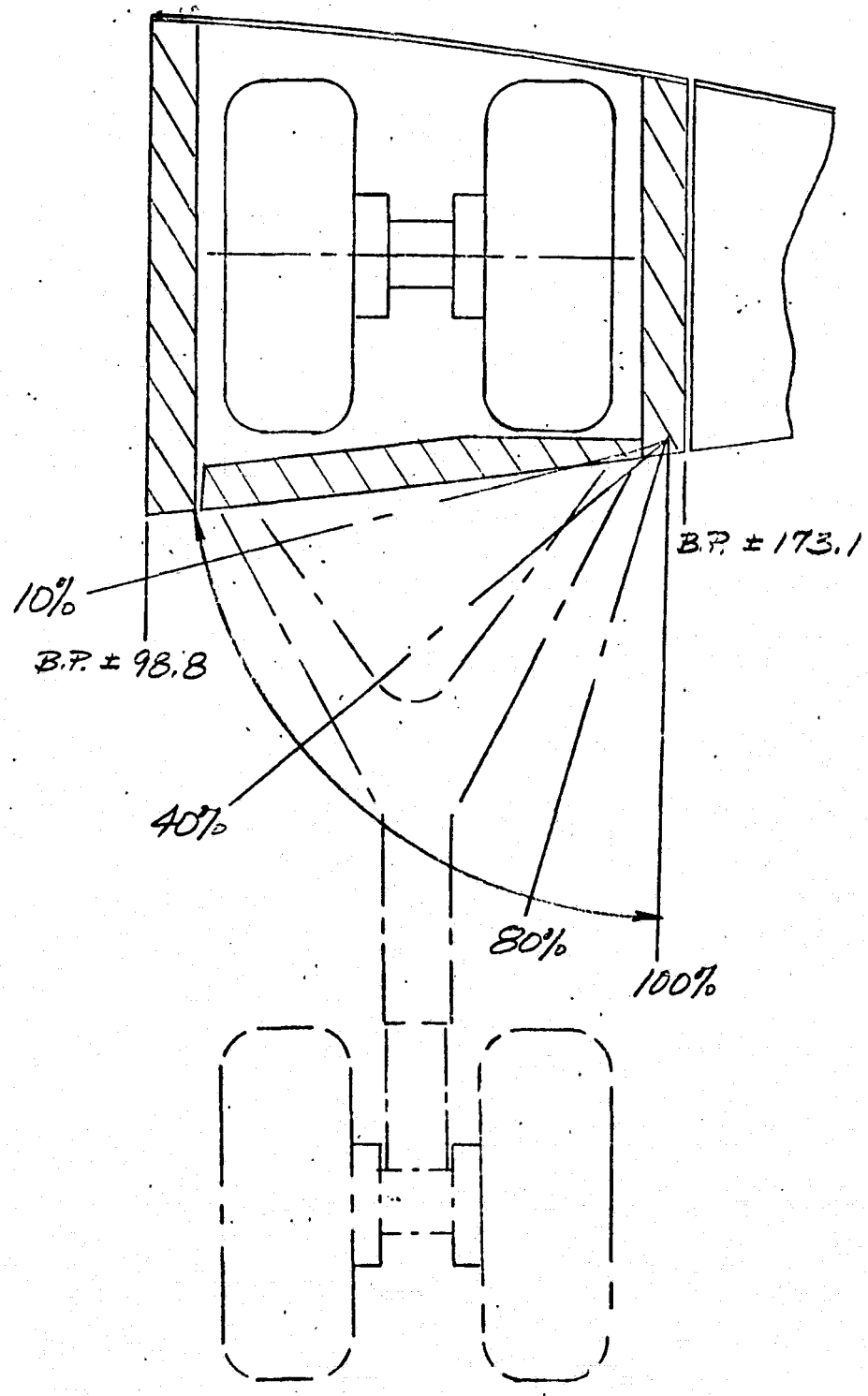

e. Orbiter Main Landing Gear, Front View

Figure 2. - Continued.

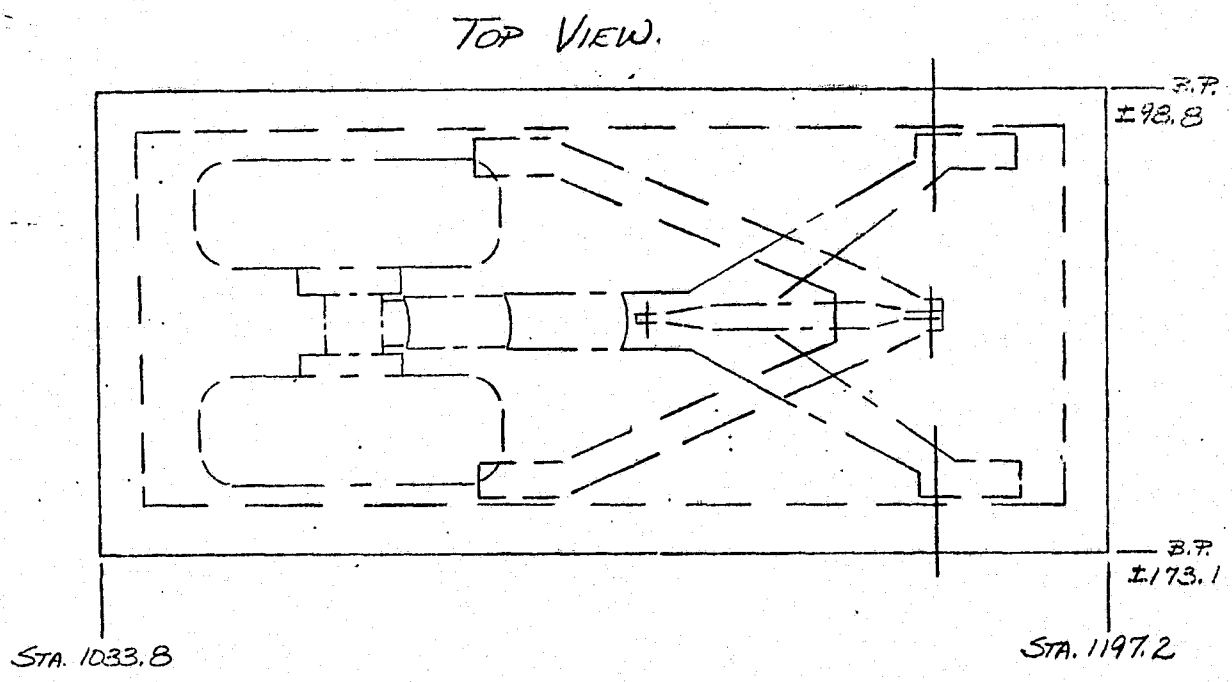

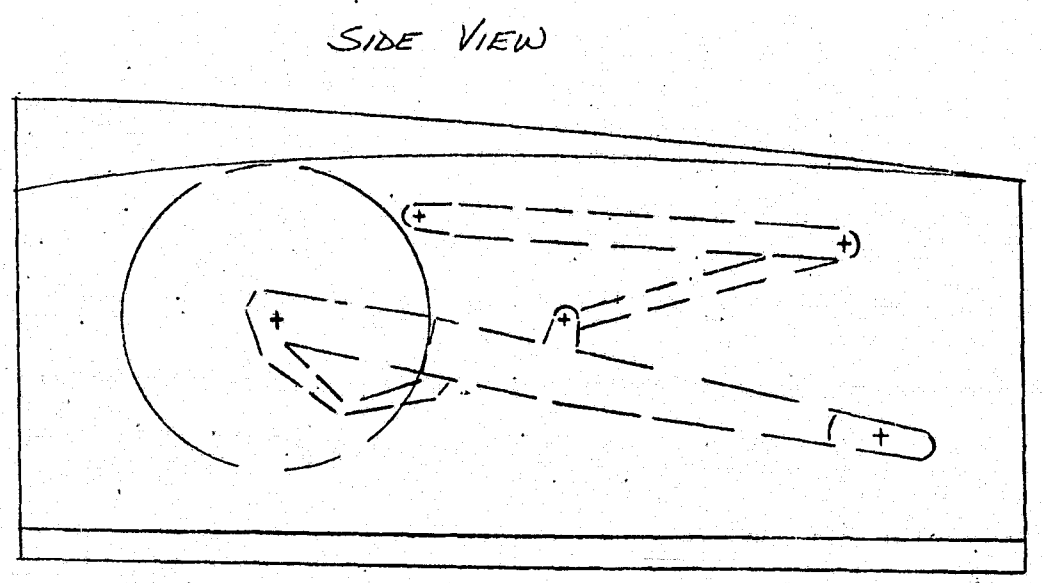

f. Orbiter Main Landing Gear, Top and Side Views.

Figure 2. - Continued.

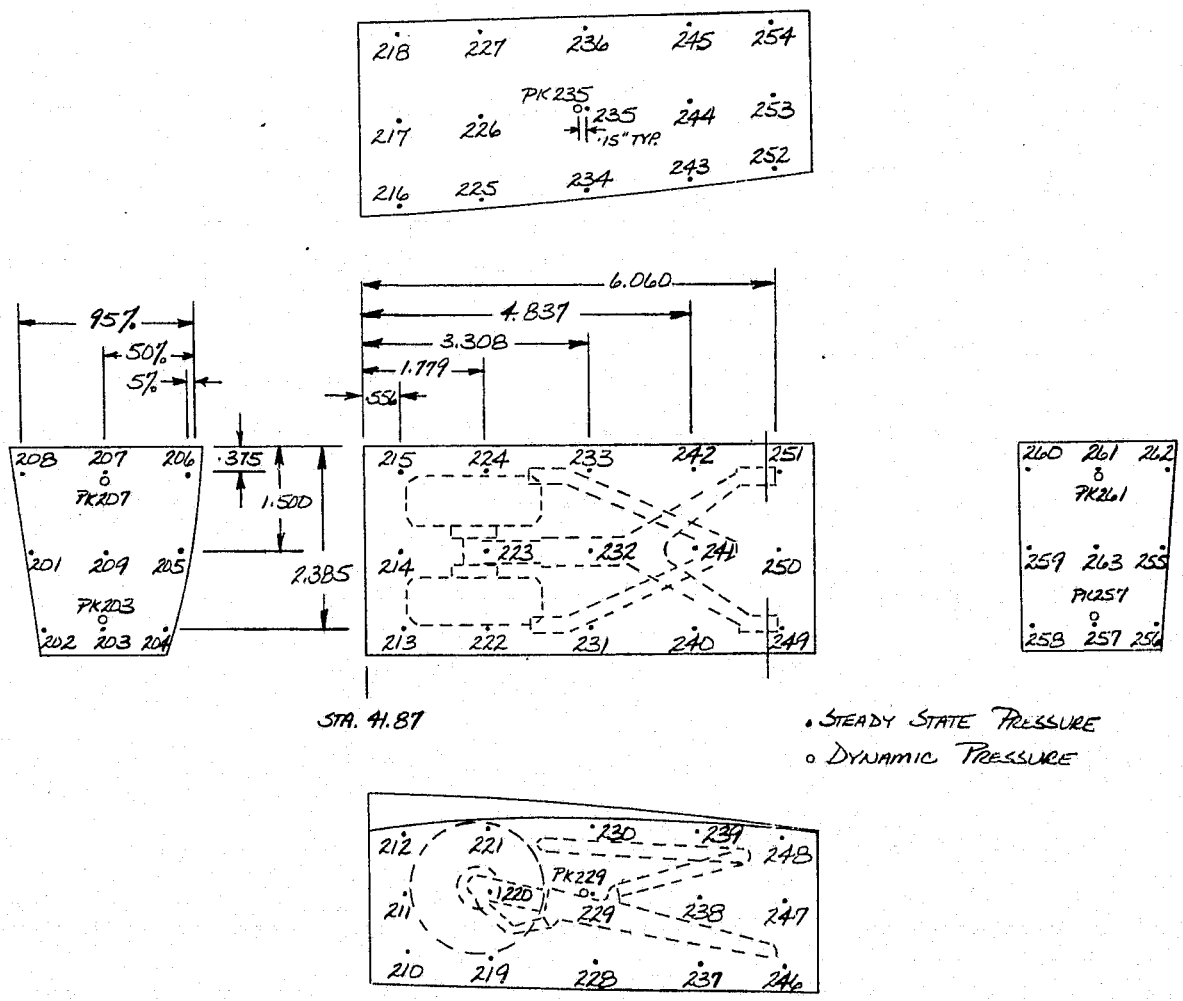

g. Main Landing Gear Wheel Well Pressure Tap Locations

Figure 2. - Continued.

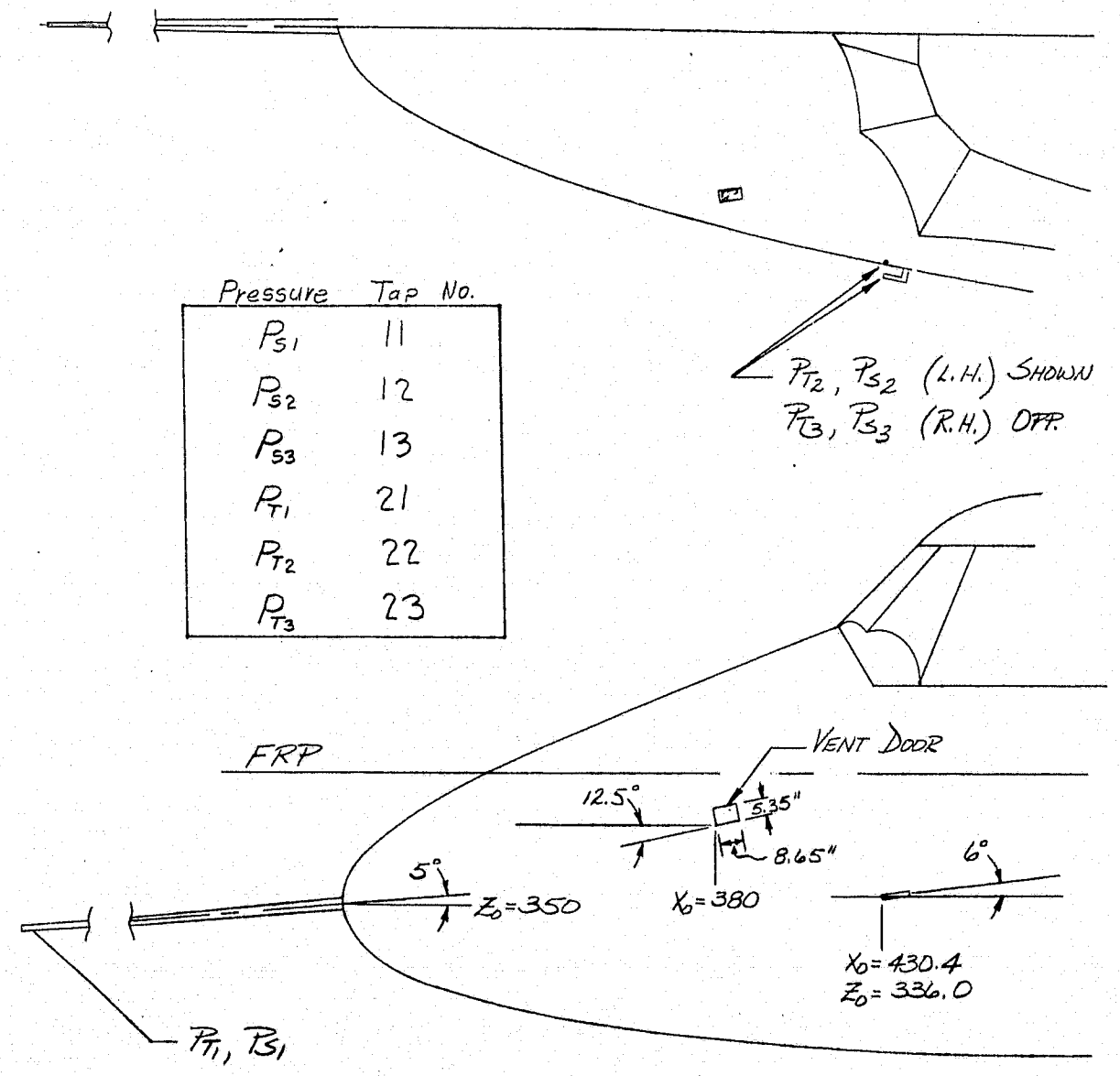

h. Orbiter Nose Probe and Air Vent Door Instrumentation

Figure 2. - Concluded.

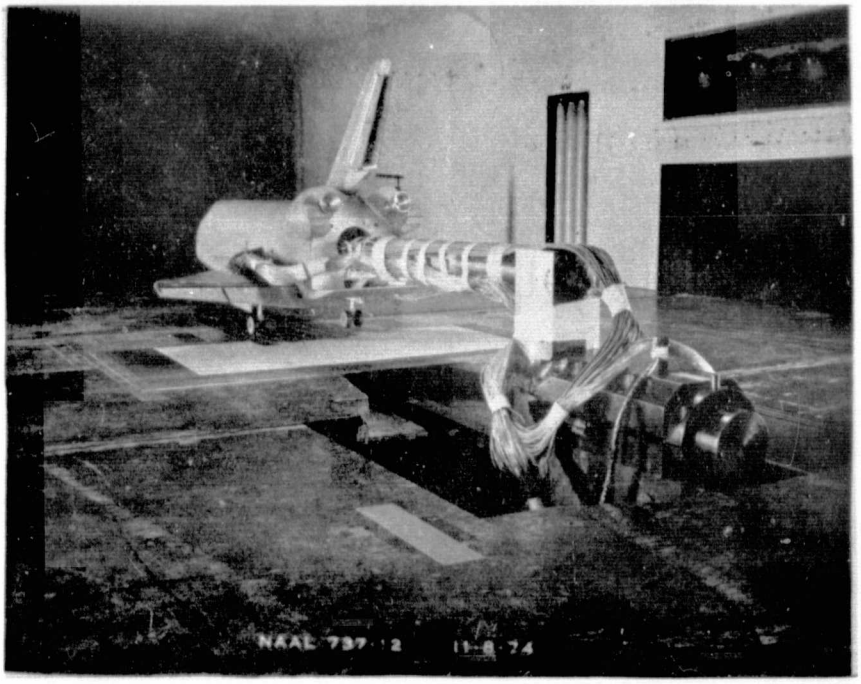

a. Rear View, Model Installation, Configuration B_{66} C_{12} G_{17} M_{16} N_{28} F_{10} W_{127} E_{55} V_8 R_5 X_9 + Ground Plane

Figure 3. - Model photographs.

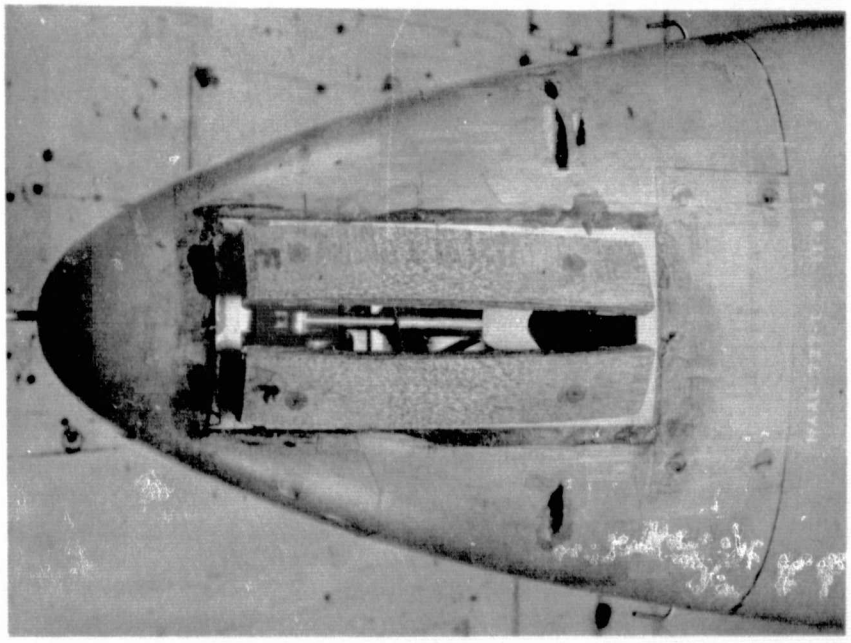

b. Bottom View, Nose Gear, Gear Door Open 40%

Figure 3. - Continued.

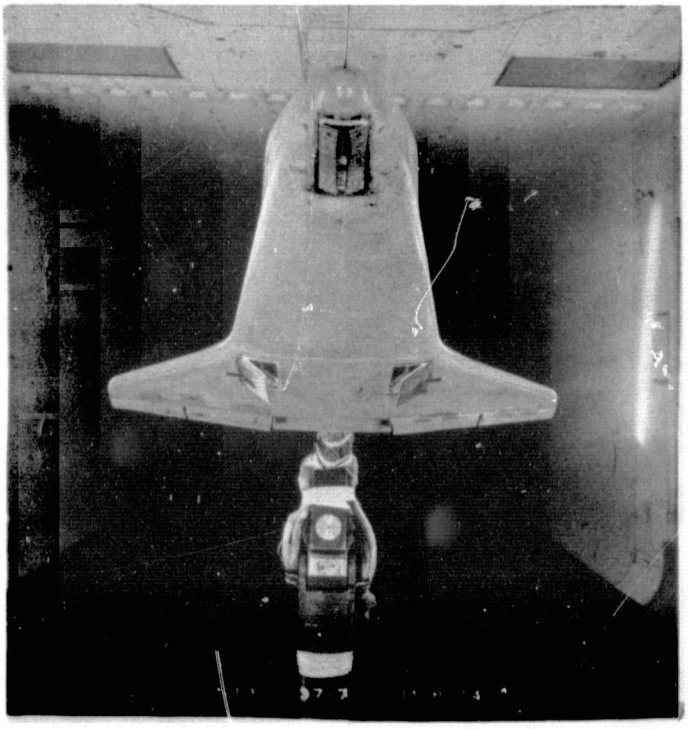

c. Bottom View, Main Gear, Gear Door Open 40%

Figure 3. - Continued.

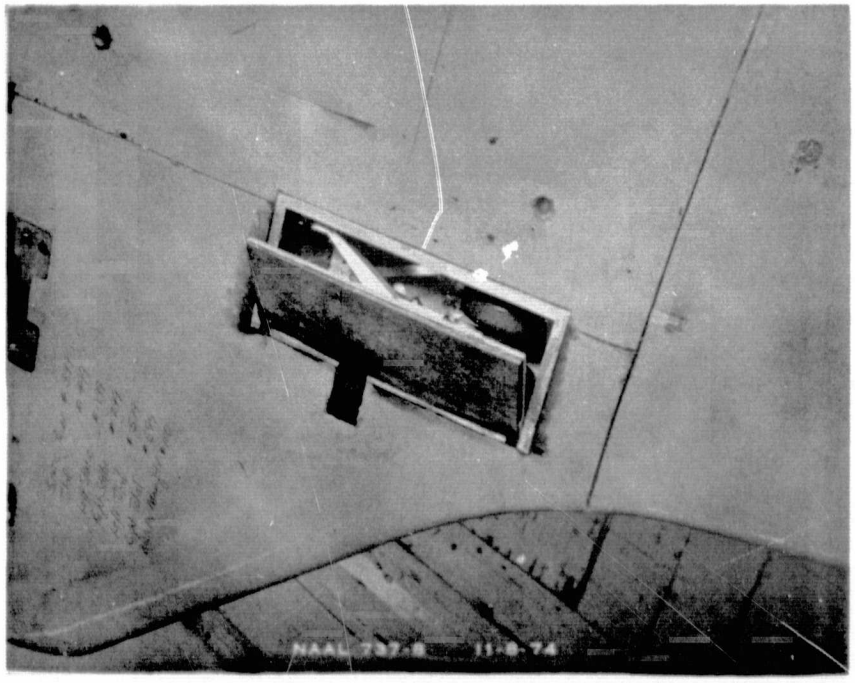

d. Front View, Gear Door Open 40%

Figure 3. - Continued.

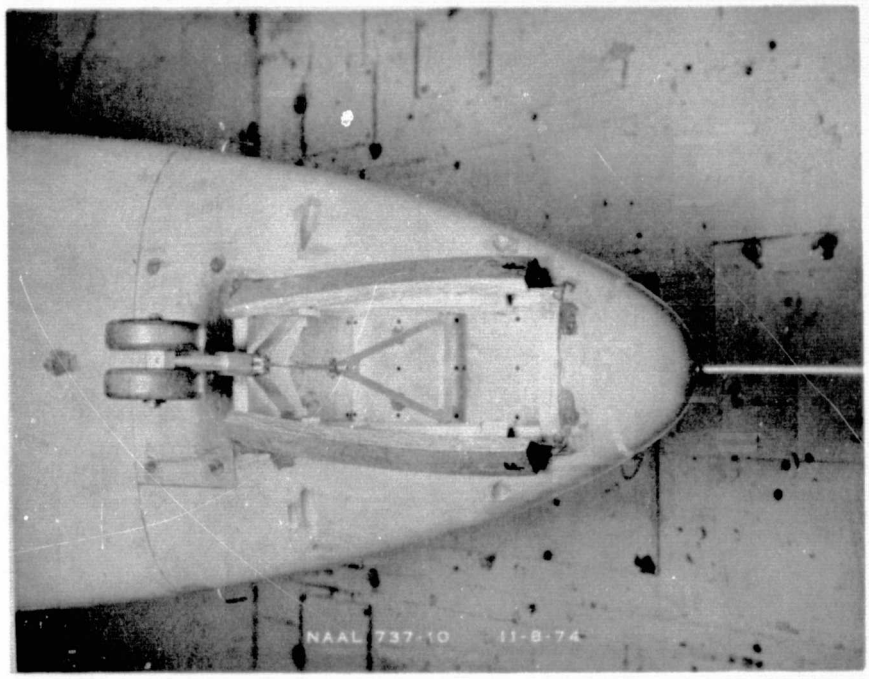

e. Bottom View, Nose Gear, Gear Door Open 100%

Figure 3. - Continued.

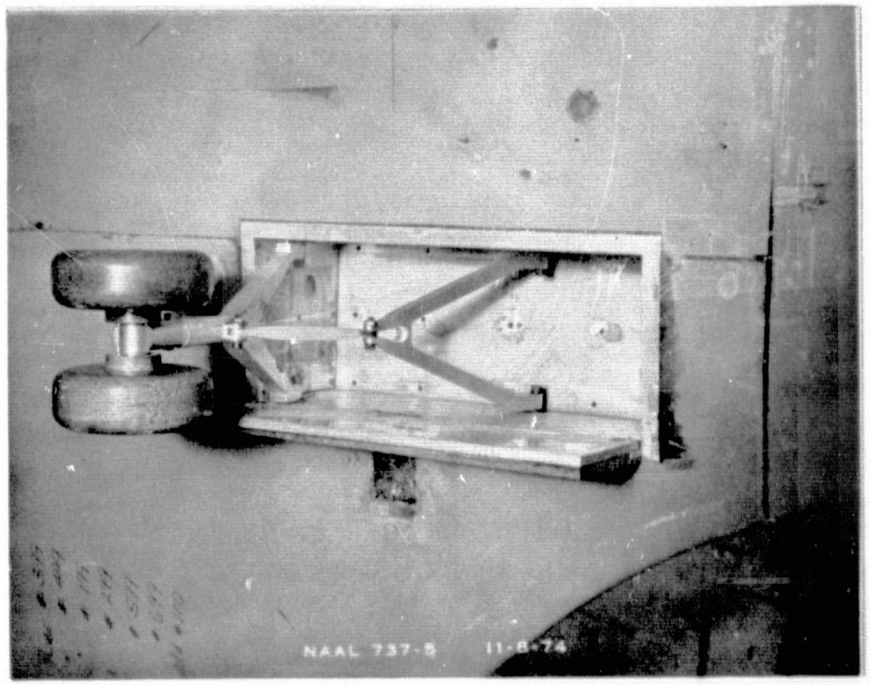

f. Bottom View, Main Gear, Gear Door Open 100%

Figure 3. - Concluded.

APPENDIX

TABULATED SOURCE DATA - PRESSURE

NAAL 737 OA143 ORB/BBB-NOSE PRB+VNT DR CPS (RFCA01) (14 MAY 75)

REFERENCE DATA

SREF =	2890.0000 SQ.FT.	XMRP =	1078.7000 IN.XO		
LREF =	474.8000 IN.	YMRP =	.0000 IN.YO		
BREF =	938.6800 IN.	ZMRP =	375.0000 IN.ZO		
SCALE =	.0405				

PARAMETRIC DATA

BETA =	.000	BDFLAP =	-11.700
ELEVON =	5.000	RUDDER =	.000
SPDBRK =	25.000	GRDPLN =	1.000
LNGRPS =	1.000	LNDGDR =	100.000

SECTION (1)PROBE+VENT DR DEPENDENT VARIABLE CP

MACH (1) = .200 ALPHA (1) = .010

TAP	11.000	12.000	13.000	21.000	22.000	23.000
D1						
.000	.0578	-.1082	-.0824	.9975	.9932	.9971

MACH (1) = .200 ALPHA (2) = 5.380

TAP	11.000	12.000	13.000	21.000	22.000	23.000
D1						
.000	.0460	-.0800	-.0533	.9956	.9957	.9958

MACH (1) = .200 ALPHA (3) = 10.710

TAP	11.000	12.000	13.000	21.000	22.000	23.000
D1						
.000	.0294	-.0802	-.0544	.9919	.9916	.9838

MACH (1) = .200 ALPHA (4) = 16.[illegible]

TAP	11.000	12.000	13.000	21.000	22.000	23.000
D1						
.000	.0038	-.1057	-.0847	.9802	.9752	.9272

MACH (1) = .200 ALPHA (5) = 19.380

TAP	11.000	12.000	13.000	21.000	22.000	23.000
D1						
.000	-.0079	-.1450	-.1243	.9683	.9540	.8812

NAAL 737 OA143 ORB/866-NOSE PRB+VNT DR CPS (RFCA02) (14 MAY 75)

REFERENCE DATA

SREF =	2690.0000 SQ.FT.	XMRP =	1076.7000 IN.XO		
LREF =	474.8000 IN.	YMRP =	.0000 IN.YO		
BREF =	936.6800 IN.	ZMRP =	375.0000 IN.ZO		
SCALE =	.0405				

PARAMETRIC DATA

BETA =	-4.000	BDFLAP =	-11.700
ELEVON =	5.000	RUDDER =	.000
SPDBRK =	25.000	GRDPLN =	1.000
LNGRPS =	1.000	LNDGDR =	100.000

SECTION (1)PROBE+VENT DR DEPENDENT VARIABLE CP

MACH (1) = .200 ALPHA (1) = .010

TAP	11.000	12.000	13.000	21.000	22.000	23.000
D1						
.000	.0556	-.0390	-.1442	.9969	.9902	.9954

MACH (1) = .200 ALPHA (2) = 5.370

TAP	11.000	12.000	13.000	21.000	22.000	23.000
D1						
.000	.0439	-.0105	-.1139	.9958	.9947	.9943

MACH (1) = .200 ALPHA (3) = 10.760

TAP	11.000	12.000	13.000	21.000	22.000	23.000
D1						
.000	.0240	-.0109	-.1262	.9927	.9956	.6955

MACH (1) = .200 ALPHA (4) = 15.150

TAP	11.000	12.000	13.000	21.000	22.000	23.000
D1						
.000	-.0075	-.0340	-.1501	.9785	.9774	.8986

MACH (1) = .200 ALPHA (5) = 19.360

TAP	11.000	12.000	13.000	21.000	22.000	23.000
D1						
.000	-.0193	-.0643	-.1825	.9683	.9649	.7910

NAAL 737 OA143 ORB/B66-NOSE PRB+VNT DR CPS (RFCA03) (14 MAY 75)

REFERENCE DATA

SREF =	2690.0000 SQ.FT.	XMRP =	1076.7000 IN.XO		
LREF =	474.8000 IN.	YMRP =	.0000 IN.YO		
BREF =	936.6800 IN.	ZMRP =	375.0000 IN.ZO		
SCALE =	.0405				

PARAMETRIC DATA

BETA =	-8.000	BDFLAP =	-11.700
ELEVON =	5.000	RUDDER =	.000
SPDBRK =	25.000	GRDPLN =	1.000
LNGRPS =	1.000	LNDGDR =	100.000

SECTION (1)PROBE+VENT DR DEPENDENT VARIABLE CP

MACH (1) = .200 ALPHA (1) = .030

TAP	11.000	12.000	13.000	21.000	22.000	23.000
D1						
.000	.0527	.0378	-.1931	.9968	.9905	.9952

MACH (1) = .200 ALPHA (2) = 5.380

TAP	11.000	12.000	13.000	21.000	22.000	23.000
D1						
.000	.0270	.0671	-.1699	.9960	.9969	.9789

MACH (1) = .200 ALPHA (3) = 10.760

TAP	11.000	12.000	13.000	21.000	22.000	23.000
D1						
.000	.0190	.0680	-.1760	.9902	.9923	.5512

MACH (1) = .200 ALPHA (4) = 16.170

TAP	11.000	12.000	13.000	21.000	22.000	23.000
D1						
.000	-.0030	.0451	-.2079	.9782	.9863	.8749

MACH (1) = .200 ALPHA (5) = 19.400

TAP	11.000	12.000	13.000	21.000	22.000	23.000
D1						
.000	-.0144	.0202	-.245[illegible]	.9661	.9741	.8413

NAAL 737 OA143 ORB/B66-NOSE PRB+VNT DR CPS (RFCA04) (14 MAY 75)

REFERENCE DATA

SREF =	2690.0000 SQ.FT.	XMRP =	1076.7000 IN.XO		
LREF =	474.8000 IN.	YMRP =	.0000 IN.YO		
BREF =	936.6800 IN.	ZMRP =	375.0000 IN.ZO		
SCALE =	.0405				

PARAMETRIC DATA

BETA =	4.000	BDFLAP =	-11.700
ELEVON =	5.000	RUDDER =	.000
SPDBRK =	25.000	GRDPLN =	1.000
LNGRPS =	1.000	LNDGDR =	100.000

SECTION (1)PROBE+VENT DR DEPENDENT VARIABLE CP

MACH (1) = .200 ALPHA (1) = .000

TAP	11.000	12.000	13.000	21.000	22.000	23.000
D1						
.000	.0489	-.1693	-.0145	.9966	.9931	.9951

MACH (1) = .200 ALPHA (2) = 5.340

TAP	11.000	12.000	13.000	21.000	22.000	23.000
D1						
.000	.0431	-.1412	.0163	.9962	.9947	.9943

MACH (1) = .200 ALPHA (3) = 10.730

TAP	11.000	12.000	13.000	21.000	22.000	23.000
D1						
.000	.0257	-.1406	.0151	.9890	.6200	.9862

MACH (1) = .200 ALPHA (4) = 16.140

TAP	11.000	12.000	13.000	21.000	22.000	23.000
D1						
.000	.0067	-.1764	-.0156	.9795	.9357	.9558

MACH (1) = .200 ALPHA (5) = 19.370

TAP	11.000	12.000	13.000	21.000	22.000	23.000
D1						
.000	.0002	-.2064	-.0469	.9572	.8817	.9062

NAAL 737 OA143 ORB/B66-NOSE PRB+VNT DR CPS (RFCA05) (14 MAY 75)

REFERENCE DATA

SREF =	2690.0000 SQ.FT.	XMRP =	1076.7000 IN.XO
LREF =	474.8000 IN.	YMRP =	.0000 IN.YO
BREF =	936.6800 IN.	ZMRP =	375.0000 IN.ZO
SCALE =	.0405		

PARAMETRIC DATA

BETA =	8.000	BDFLAP =	-11.700
ELEVON =	5.000	RUDDER =	.000
SPDBRK =	25.000	GRDPLN =	1.000
LNGRPS =	1.000	LNDGDR =	100.000

SECTION (1)PROBE+VENT DR DEPENDENT VARIABLE CP

MACH (1) = .200 ALPHA (1) = .030

TAP	11.000	12.000	13.000	21.000	22.000	23.000
DI						
.000	.0356	-.2168	.0575	.9925	.9938	.9951

MACH (1) = .200 ALPHA (2) = 5.360

TAP	11.000	12.000	13.000	21.000	22.000	23.000
DI						
.000	.0332	-.1936	.0893	.9936	.9665	.9961

MACH (1) = .200 ALPHA (3) = 10.770

TAP	11.000	12.000	13.000	21.000	22.000	23.000
DI						
.000	.0334	-.1929	.0920	.9842	.6286	.9866

MACH (1) = .200 ALPHA (4) = 16.160

TAP	11.000	12.000	13.000	21.000	22.000	23.000
DI						
.000	.0337	-.2349	.0650	.9737	.9600	.9584

MACH (1) = .200 ALPHA (5) = 19.390

TAP	11.000	12.000	13.000	21.000	22.000	23.000
DI						
.000	.0331	-.2697	.0375	.9605	.9312	.9218

NAAL 737 OA143 ORB/B66-NOSE PRB+VNT DR CPS (RFCA06) (14 MAY 75)

REFERENCE DATA

SREF =	2690.0000 SQ.FT.	XMRP =	1076.7000 IN.XO		
LREF =	474.8000 IN.	YMRP =	.0000 IN.YO		
BREF =	936.6800 IN.	ZMRP =	375.0000 IN.ZO		
SCALE =	.0405				

PARAMETRIC DATA

BETA =	.000	BDFLAP =	-11.700
ELEVON =	10.000	RUDDER =	.000
SPDBRK =	25.000	GRDPLN =	1.000
LNGRPS =	1.000	LNDGDR =	100.000

SECTION (1)PROBE+VENT DR DEPENDENT VARIABLE CP

MACH (1) = .200 ALPHA (1) = .110

TAP	11.000	12.000	13.000	21.000	22.000	23.000
D1						
.000	.0571	-.1073	-.0838	.9985	.9938	.9969

MACH (1) = .200 ALPHA (2) = 5.470

TAP	11.000	12.000	13.000	21.000	22.000	23.000
D1						
.000	.0468	-.0780	-.0536	.9971	.9956	.9946

MACH (1) = .200 ALPHA (3) = 10.840

TAP	11.000	12.000	13.000	21.000	22.000	23.000
D1						
.000	.0298	-.0766	-.0549	.9875	.9878	.9791

MACH (1) = .200 ALPHA (4) = 16.230

TAP	11.000	12.000	13.000	21.000	22.000	23.000
D1						
.000	.0038	-.1031	-.0869	.9804	.9746	.9277

MACH (1) = .200 ALPHA (5) = 19.450

TAP	11.000	12.000	13.000	21.000	22.000	23.000
D1						
.000	-.0067	-.1429	-.1260	.9704	.9596	.8833

NAAL 737 OA143 ORB/B66-NOSE PRB+VNT DR CPS (RFCA07) (14 MAY 75)

REFERENCE DATA

SREF = 2690.0000 SQ.FT. XMRP = 1076.7000 IN.XO
LREF = 474.8000 IN. YMRP = .0000 IN.YO
BREF = 936.6800 IN. ZMRP = 375.0000 IN.ZO
SCALE = .0405

PARAMETRIC DATA

BETA = -4.000 BDFLAP = -11.700
ELEVON = 10.000 RUDDER = .000
SPDBRK = 25.000 GRDPLN = 1.000
LNGRPS = 1.000 LNDGDR = 100.000

SECTION (1)PROBE+VENT DR DEPENDENT VARIABLE CP

MACH (1) = .200 ALPHA (1) = .130

TAP	11.000	12.000	13.000	21.000	22.000	23.000
DI						
.000	.0563	-.0349	-.1435	.9956	.9921	.9962

MACH (1) = .200 ALPHA (2) = 5.470

TAP	11.000	12.000	13.000	21.000	22.000	23.000
DI						
.000	.0447	-.0084	-.1138	.9943	.9924	.9912

MACH (1) = .200 ALPHA (3) = 10.870

TAP	11.000	12.000	13.000	21.000	22.000	23.000
DI						
.000	.0224	-.0109	-.1277	.9925	.9954	.6709

MACH (1) = .200 ALPHA (4) = 16.240

TAP	11.000	12.000	13.000	21.000	22.000	23.000
DI						
.000	-.0087	-.0318	-.1538	.9798	.9791	.8968

MACH (1) = .200 ALPHA (5) = 19.450

TAP	11.000	12.000	13.000	21.000	22.000	23.000
DI						
.000	-.0197	-.0612	-.1854	.9639	.9621	.7949

NAAL 737 OA143 ORB/B66-NOSE PRB+VNT DR CPS (RFCA08) (14 MAY 75)

REFERENCE DATA

SREF =	2690.0000 SQ.FT.	XMRP =	1076.7000 IN.XO		
LREF =	474.8000 IN.	YMRP =	.0000 IN.YO		
BREF =	936.6800 IN.	ZMRP =	375.0000 IN.ZO		
SCALE =	.0405				

PARAMETRIC DATA

BETA =	-8.000	BDFLAP =	-11.700
ELEVON =	10.000	RUDDER =	.000
SPDBRK =	25.000	GRDPLN =	1.000
LNGRPS =	1.000	LNDGDR =	100.000

SECTION (1)PROBE+VENT DR DEPENDENT VARIABLE CP

MACH (1) = .200 ALPHA (1) = .120

TAP	11.000	12.000	13.000	21.000	22.000	23.000
D1						
.000	.0531	.0427	-.1924	.9953	.9910	.9966

MACH (1) = .200 ALPHA (2) = 5.490

TAP	11.000	12.000	13.000	21.000	22.000	23.000
D1						
.000	.0274	.0667	-.1687	.9959	.9944	.9743

MACH (1) = .200 ALPHA (3) = 10.870

TAP	11.000	12.000	13.000	21.000	22.000	23.000
D1						
.000	.0186	.0712	-.1751	.9891	.9920	.5527

MACH (1) = .200 ALPHA (4) = 16.230

TAP	11.000	12.000	13.000	21.000	22.000	23.000
D1						
.000	-.0022	.0478	-.2066	.9730	.9851	.8781

MACH (1) = .200 ALPHA (5) = 19.440

TAP	11.000	12.000	13.000	21.000	22.000	23.000
D1						
.000	-.0161	.0218	-.2481	.9665	.9770	.8392

NAAL 737 OA143 ORB/B66-NOSE PRB+VNT DR CPS (RFCA09) (14 MAY 75)

REFERENCE DATA

SREF =	2690.0000 SQ.FT.	XMRP =	1076.7000 IN.XO		
LREF =	474.8000 IN.	YMRP =	.0000 IN.YO		
BREF =	936.6800 IN.	ZMRP =	375.0000 IN.ZO		
SCALE =	.0405				

PARAMETRIC DATA

BETA =	4.000	BDFLAP =	-11.700
ELEVON =	10.000	RUDDER =	.000
SPDBRK =	25.000	GRDPLN =	1.000
LNGRPS =	1.000	LNDGDR =	100.000

SECTION (1)PROBE+VENT DR DEPENDENT VARIABLE CP

MACH (1) = .200 ALPHA (1) = .110

TAP	11.000	12.000	13.000	21.000	22.000	23.000
DI						
.000	.0501	-.1660	-.0137	.9956	.9945	.9957

MACH (1) = .200 ALPHA (2) = 5.450

TAP	11.000	12.000	13.000	21.000	22.000	23.000
DI						
.000	.0435	-.1390	.0159	.9974	.9970	.9959

MACH (1) = .200 ALPHA (3) = 10.830

TAP	11.000	12.000	13.000	21.000	22.000	23.000
DI						
.000	.0268	-.1376	.0162	.9862	.6115	.9826

MACH (1) = .200 ALPHA (4) = 16.230

TAP	11.000	12.000	13.000	21.000	22.000	23.000
DI						
.000	.0083	-.1718	-.0160	.9770	.9324	.9503

MACH (1) = .200 ALPHA (5) = 19.440

TAP	11.000	12.000	13.000	21.000	22.000	23.000
DI						
.000	.0002	-.2054	-.0503	.9671	.8892	.9045

NAAL 737 OA143 ORB/B66-NOSE PRB+VNT DR CPS (RFCA10) (14 MAY 75)

REFERENCE DATA

SREF =	2690.0000 SQ.FT.	XMRP =	1076.7000 IN.XO		
LREF =	474.8000 IN.	YMRP =	.0000 IN.YO		
BREF =	936.6800 IN.	ZMRP =	375.0000 IN.ZO		
SCALE =	.0405				

PARAMETRIC DATA

BETA =	8.000	BDFLAP =	-11.700
ELEVON =	10.000	RUDDER =	.000
SPDBRK =	25.000	GRDPLN =	1.000
LNGRPS =	1.000	LNDGDR =	100.000

SECTION (1)PROBE+VENT DR DEPENDENT VARIABLE CP

MACH (1) = .200 ALPHA (1) = .110

TAP	11.000	12.000	13.000	21.000	22.000	23.000
DI						
.000	.0362	-.2143	.0574	.9932	.9958	.9970

MACH (1) = .200 ALPHA (2) = 5.430

TAP	11.000	12.000	13.000	21.000	22.000	23.000
DI						
.000	.0336	-.1906	.0899	.9937	.9658	.9941

MACH (1) = .200 ALPHA (3) = 10.830

TAP	11.000	12.000	13.000	21.000	22.000	23.000
DI						
.000	.0335	-.1921	.0912	.9844	.6353	.9843

MACH (1) = .200 ALPHA (4) = 16.230

TAP	11.000	12.000	13.000	21.000	22.000	23.000
DI						
.000	.0365	-.2289	.0673	.9679	.9642	.9582

MACH (1) = .200 ALPHA (5) = 19.430

TAP	11.000	12.000	13.000	21.000	22.000	23.000
DI						
.000	.0307	-.2691	.0327	.9601	.9312	.9182

NAAL 737 OA143 ORB/BSS-NOSE PRB+VNT DR CPS (RFCA11) (14 MAY 75)

REFERENCE DATA

SREF = 2690.0000 SQ.FT. XMRP = 1076.7000 IN.XO
LREF = 474.8000 IN. YMRP = .0000 IN.YO
BREF = 936.6800 IN. ZMRP = 375.0000 IN.ZO
SCALE = .0405

PARAMETRIC DATA

BETA = .000 BDFLAP = -11.700
ELEVON = 15.000 RUDDER = .000
SPDBRK = 25.000 GRDPLN = 1.000
LNGRPS = 1.000 LNDGDR = 100.000

SECTION (1)PROBE+VENT DR DEPENDENT VARIABLE CP

MACH (1) = .200 ALPHA (1) = .190

TAP	11.000	12.000	13.000	21.000	22.000	23.000
D1						
.000	.0574	-.1050	-.0828	.9980	.9925	.9964

MACH (1) = .200 ALPHA (2) = 5.560

TAP	11.000	12.000	13.000	21.000	22.000	23.000
D1						
.000	.0469	-.0786	-.0535	.9987	.9948	.9943

MACH (1) = .200 ALPHA (3) = 10.920

TAP	11.000	12.000	13.000	21.000	22.000	23.000
D1						
.000	.0307	-.0763	-.0545	.9925	.9950	.9872

MACH (1) = .200 ALPHA (4) = 16.300

TAP	11.000	12.000	13.000	21.000	22.000	23.000
D1						
.000	.0051	-.1013	-.0851	.9770	.9720	.9259

MACH (1) = .200 ALPHA (5) = 19.510

TAP	11.000	12.000	13.000	21.000	22.000	23.000
D1						
.000	-.0058	-.1396	-.1241	.9655	.9496	.8768

NAAL 737 OA143 ORB/B66-NOSE PRB+VNT DR CPS (RFCA12) (14 MAY 75)

REFERENCE DATA

SREF =	2690.0000 SQ.FT.	XMRP =	1076.7000 IN.XO		
LREF =	474.8000 IN.	YMRP =	.0000 IN.YO		
BREF =	936.6800 IN.	ZMRP =	375.0000 IN.ZO		
SCALE =	.0405				

PARAMETRIC DATA

BETA =	-4.000	BDFLAP =	-11.700
ELEVON =	15.000	RUDDER =	.000
SPDBRK =	25.000	GRDPLN =	1.000
LNGRPS =	1.000	LNDGDR =	100.000

SECTION (1)PROBE+VENT DR DEPENDENT VARIABLE CP

MACH (1) = .200 ALPHA (1) = .200

TAP	11.000	12.000	13.000	21.000	22.000	23.000
D1						
.000	.0565	-.0346	-.1440	1.0003	.9944	.9992

MACH (1) = .200 ALPHA (2) = 5.570

TAP	11.000	12.000	13.000	21.000	22.000	23.000
D1						
.000	.0440	-.0073	-.1158	.9975	.9964	.9956

MACH (1) = .200 ALPHA (3) = 10.970

TAP	11.000	12.000	13.000	21.000	22.000	23.000
D1						
.000	.0248	-.0068	-.1253	.9914	.9915	.6489

MACH (1) = .200 ALPHA (4) = 16.300

TAP	11.000	12.000	13.000	21.000	22.000	23.000
D1						
.000	-.0084	-.0315	-.1539	.9822	.9823	.8973

MACH (1) = .200 ALPHA (5) = 19.500

TAP	11.000	12.000	13.000	21.000	22.000	23.000
D1						
.000	-.0214	-.0630	-.1883	.9705	.9664	.8028

NAAL 737 OA143 ORB/B66-NOSE PRB+VNT DR CPS (RFCA13) (14 MAY 75)

REFERENCE DATA

SREF = 2690.0000 SQ.FT. XMRP = 1076.7000 IN.XO
LREF = 474.8000 IN. YMRP = .0000 IN.YO
BREF = 936.6800 IN. ZMRP = 375.0000 IN.ZO
SCALE = .0405

PARAMETRIC DATA

BETA = -8.000 BDFLAP = -11.700
ELEVON = 15.000 RUDDER = .000
SPDBRK = 25.000 GRDPLN = 1.000
LNGRPS = 1.000 LNDGDR = 100.000

SECTION (1)PROBE+VENT DR DEPENDENT VARIABLE CP

MACH (1) = .200 ALPHA (1) = .210

TAP	11.000	12.000	13.000	21.000	22.000	23.000
DI						
.000	.0534	.0450	-.1916	.9968	.9913	.9970

MACH (1) = .200 ALPHA (2) = 5.590

TAP	11.000	12.000	13.000	21.000	22.000	23.000
DI						
.000	.0278	.0685	-.1695	.9984	.9973	.9759

MACH (1) = .200 ALPHA (3) = 10.970

TAP	11.000	12.000	13.000	21.000	22.000	23.000
DI						
.000	.0211	.0712	-.1737	.9876	.9925	.5585

MACH (1) = .200 ALPHA (4) = 16.340

TAP	11.000	12.000	13.000	21.000	22.000	23.000
DI						
.000	-.0043	.0467	-.2112	.9816	.9912	.8828

MACH (1) = .200 ALPHA (5) = 19.520

TAP	11.000	12.000	13.000	21.000	22.000	23.000
DI						
.000	-.0157	.0238	-.2476	.9657	.9723	.8343

NAAL 737 OA143 ORB/866-NOSE PRB+VNT DR CPS (RFCA14) (14 MAY 75)

REFERENCE DATA

SREF =	2690.0000 SQ.FT.	XMRP =	1076.7000 IN.XO		
LREF =	474.8000 IN.	YMRP =	.0000 IN.YO		
BREF =	936.6800 IN.	ZMRP =	375.0000 IN.ZO		
SCALE =	.0405				

PARAMETRIC DATA

BETA =	4.000	BDFLAP =	-11.700
ELEVON =	15.000	RUDDER =	.000
SPDBRK =	25.000	GRDPLN =	1.000
LNGRPS =	1.000	LNDGDR =	100.000

SECTION (1)PROBE+VENT DR DEPENDENT VARIABLE CP

MACH (1) = .200 ALPHA (1) = .170

TAP	11.000	12.000	13.000	21.000	22.000	23.000
DI						
.000	.0503	-.1645	-.0138	.9980	.9945	.9964

MACH (1) = .200 ALPHA (2) = 5.550

TAP	11.000	12.000	13.000	21.000	22.000	23.000
DI						
.000	.0440	-.1368	.0163	.9964	.9953	.9948

MACH (1) = .200 ALPHA (3) = 10.910

TAP	11.000	12.000	13.000	21.000	22.000	23.000
DI						
.000	.0278	-.1373	.0163	.9915	.6295	.9862

MACH (1) = .200 ALPHA (4) = 16.300

TAP	11.000	12.000	13.000	21.000	22.000	23.000
DI						
.000	.0095	-.1704	-.0155	.9758	.9322	.9501

MACH (1) = .200 ALPHA (5) = 19.500

TAP	11.000	12.000	13.000	21.000	22.000	23.000
DI						
.000	.0010	-.2033	-.0508	.9690	.8906	.9047

NAAL 737 OA143 ORB/B66-NOSE PRB+VNT DR CPS (RFCA15) (14 MAY 75)

REFERENCE DATA

SREF = 2690.0000 SQ.FT. XMRP = 1076.7000 IN.XO
LREF = 474.8000 IN. YMRP = .0000 IN.YO
BREF = 936.6800 IN. ZMRP = 375.0000 IN.ZO
SCALE = .0405

PARAMETRIC DATA

BETA = 8.000 BDFLAP = -11.700
ELEVON = 15.000 RUDDER = .000
SPDBRK = 25.000 GRDPLN = 1.000
LNGRPS = 1.000 LNDGDR = 100.000

SECTION (1)PROBE+VENT DR DEPENDENT VARIABLE CP

MACH (1) = .200 ALPHA (1) = .200

TAP	11.000	12.000	13.000	21.000	22.000	23.000
D1						
.000	.0369	-.2116	.0581	.9940	.9941	.9953

MACH (1) = .200 ALPHA (2) = 5.550

TAP	11.000	12.000	13.000	21.000	22.000	23.000
D1						
.000	.0345	-.1895	.0907	.9938	.9644	.9960

MACH (1) = .200 ALPHA (3) = 10.930

TAP	11.000	12.000	13.000	21.000	22.000	23.000
D1						
.000	.0354	-.1891	.0927	.9830	.6337	.9867

MACH (1) = .200 ALPHA (4) = 16.300

TAP	11.000	12.000	13.000	21.000	22.000	23.000
D1						
.000	.0341	-.2304	.0643	.9725	.9616	.9579

MACH (1) = .200 ALPHA (5) = 19.510

TAP	11.000	12.000	13.000	21.000	22.000	23.000
D1						
.000	.0343	-.2655	.0358	.9556	.9252	.9146

NAAL 737 OA143 ORB/B66-NOSE PRB+VNT DR CPS (RFCA16) (14 MAY 75)

REFERENCE DATA

SREF =	2690.0000 SQ.FT.	XMRP =	1076.7000 IN.XO		
LREF =	474.8000 IN.	YMRP =	.0000 IN.YO		
BREF =	936.6800 IN.	ZMRP =	375.0000 IN.ZO		
SCALE =	.0405				

PARAMETRIC DATA

BETA =	.000	BDFLAP =	-11.700
ELEVON =	15.000	RUDDER =	.000
SPDBRK =	25.000	GRDPLN =	.000
LNGRPS =	1.000	LNDGDR =	100.000

SECTION (1)PROBE+VENT DR DEPENDENT VARIABLE CP

MACH (1) = .230 ALPHA (1) = .120

TAP	11.000	12.000	13.000	21.000	22.000	23.000
D1						
.000	.0406	-.1087	-.0920	.9996	.9944	.9978

MACH (1) = .230 ALPHA (2) = 5.370

TAP	11.000	12.000	13.000	21.000	22.000	23.000
D1						
.000	.0391	-.0854	-.0665	.9982	.9985	.9985

MACH (1) = .230 ALPHA (3) = 10.620

TAP	11.000	12.000	13.000	21.000	22.000	23.000
D1						
.000	.0234	-.0917	-.0746	.9978	.9997	.9950

MACH (1) = .230 ALPHA (4) = 15.880

TAP	11.000	12.000	13.000	21.000	22.000	23.000
D1						
.000	-.0070	-.1226	-.1098	.9961	.9786	.9313

MACH (1) = .230 ALPHA (5) = 19.030

TAP	11.000	12.000	13.000	21.000	22.000	23.000
D1						
.000	-.0251	-.1614	-.1507	.9901	.9814	.9129

NAAL 737 OA143 ORB/B66-NOSE PRB+VNT DR CPS (RFCA17) (14 MAY 75)

REFERENCE DATA

SREF =	2690.0000 SQ.FT.	XMRP =	1076.7000 IN.XO		
LREF =	474.8000 IN.	YMRP =	.0000 IN.YO		
BREF =	936.6800 IN.	ZMRP =	375.0000 IN.ZO		
SCALE =	.0405				

PARAMETRIC DATA

BETA =	-4.000	BDFLAP =	-11.700
ELEVON =	15.000	RUDDER =	.000
SPDBRK =	25.000	GRDPLN =	.000
LNGRPS =	1.000	LNDGDR =	100.000

SECTION (1)PROBE+VENT DR DEPENDENT VARIABLE CP

MACH (1) = .230 ALPHA (1) = .130

TAP	11.000	12.000	13.000	21.000	22.000	23.000
D1						
.000	.0398	-.0475	-.1464	1.0001	.9927	.9978

MACH (1) = .230 ALPHA (2) = 5.410

TAP	11.000	12.000	13.000	21.000	22.000	23.000
D1						
.000	.0369	-.0194	-.1238	.9992	.9998	.9997

MACH (1) = .230 ALPHA (3) = 10.040

TAP	11.000	12.000	13.000	21.000	22.000	23.000
D1						
.000	.0212	-.0194	-.1439	1.0002	1.0006	.7783

MACH (1) = .230 ALPHA (4) = 15.910

TAP	11.000	12.000	13.000	21.000	22.000	23.000
D1						
.000	-.0158	-.0485	-.1776	.9986	.9983	.9247

MACH (1) = .230 ALPHA (5) = 19.080

TAP	11.000	12.000	13.000	21.000	22.000	23.000
D1						
.000	-.0321	-.0790	-.2129	.9895	.9869	.7968

NAAL 737 OA143 ORB/B66-NOSE PRB+VNT DR CPS (RFCA18) (14 MAY 75)

REFERENCE DATA

SREF =	2690.0000 SQ.FT.	XMRP =	1076.7000 IN.XO		
LREF =	474.8000 IN.	YMRP =	.0000 IN.YO		
BREF =	936.6900 IN.	ZMRP =	375.0000 IN.ZO		
SCALE =	.0405				

PARAMETRIC DATA

BETA =	-8.000	BDFLAP =	-11.700
ELEVON =	15.000	RUDDER =	.000
SPDBRK =	25.000	GRDPLN =	.000
LNGRPS =	1.000	LNDGDR =	100.000

SECTION (1)PROBE+VENT DR DEPENDENT VARIABLE CP

MACH (1) = .230 ALPHA (1) = .140

TAP	11.000	12.000	13.000	21.000	22.000	23.000
D1						
.000	.0439	.0243	-.1867	.9994	.9911	.9851

MACH (1) = .230 ALPHA (2) = 5.420

TAP	11.000	12.000	13.000	21.000	22.000	23.000
D1						
.000	.0289	.0521	-.1736	.9986	.9992	.9968

MACH (1) = .230 ALPHA (3) = 10.650

TAP	11.000	12.000	13.000	21.000	22.000	23.000
D1						
.000	.0003	.0566	-.1933	.9991	1.0004	.4996

MACH (1) = .230 ALPHA (4) = 15.920

TAP	11.000	12.000	13.000	21.000	22.000	23.000
D1						
.000	-.0050	.0348	-.2302	.9936	.9985	.8878

MACH (1) = .230 ALPHA (5) = 19.070

TAP	11.000	12.000	13.000	21.000	22.000	23.000
D1						
.000	-.0255	.0055	-.2728	.9861	.9914	.8668

NAAL 737 OA143 ORB/B66-NOSE PRB+VNT DR CPS (RFCA19) (14 MAY 75)

REFERENCE DATA

SREF =	2690.0000 SQ.FT.	XMRP =	1076.7000 IN.XO		
LREF =	474.8000 IN.	YMRP =	.0000 IN.YO		
BREF =	936.6800 IN.	ZMRP =	375.0000 IN.ZO		
SCALE =	.0405				

PARAMETRIC DATA

BETA =	4.000	BDFLAP =	-11.700
ELEVON =	15.000	RUDDER =	.000
SPDBRK =	25.000	GRDPLN =	.000
LNGRPS =	1.000	LNDGDR =	100.000

SECTION (1)PROBE+VENT DR DEPENDENT VARIABLE CP

MACH (1) = .230 ALPHA (1) = .150

TAP	11.000	12.000	13.000	21.000	22.000	23.000
D1						
.000	.0285	-.1620	-.0295	.9980	.9935	.9951

MACH (1) = .230 ALPHA (2) = 5.360

TAP	11.000	12.000	13.000	21.000	22.000	23.000
D1						
.000	.0326	-.1453	-.0044	.9996	.9990	.9988

MACH (1) = .230 ALPHA (3) = 10.620

TAP	11.000	12.000	13.000	21.000	22.000	23.000
D1						
.000	.0202	-.1531	-.0051	.9991	.7969	.9965

MACH (1) = .230 ALPHA (4) = 15.860

TAP	11.000	12.000	13.000	21.000	22.000	23.000
D1						
.000	-.0029	-.1892	-.0392	.9927	.9712	.9725

MACH (1) = .230 ALPHA (5) = 19.040

TAP	11.000	12.000	13.000	21.000	22.000	23.000
D1						
.000	-.0147	-.2279	-.0743	.9840	.8411	.9327

NAAL 737 OA143 ORB/B66-NOSE PRB+VNT DR CPS (RFCA20) (14 MAY 75)

REFERENCE DATA

SREF =	2690.0000 SQ.FT.	XMRP =	1076.7000 IN.XO		
LREF =	474.8000 IN.	YMRP =	.0000 IN.YO		
BREF =	936.6800 IN.	ZMRP =	375.0000 IN.ZO		
SCALE =	.0405				

PARAMETRIC DATA

BETA =	8.000	BDFLAP =	-11.700
ELEVON =	15.000	RUDDER =	.000
SPDBRK =	25.000	GRDPLN =	.000
LNGRPS =	1.000	LNDGDR =	100.000

SECTION (1)PROBE+VENT DR DEPENDENT VARIABLE CP

MACH (1) = .230 ALPHA (1) = .130

TAP	11.000	12.000	13.000	21.000	22.000	23.000
D1						
.000	.0167	-.2064	.0378	.9927	.9767	.9921

MACH (1) = .230 ALPHA (2) = 5.350

TAP	11.000	12.000	13.000	21.000	22.000	23.000
D1						
.000	.0246	-.1894	.0711	.9960	.9970	.9986

MACH (1) = .230 ALPHA (3) = 10.610

TAP	11.000	12.000	13.000	21.000	22.000	23.000
D1						
.000	.0188	-.2035	.0707	.9928	.5482	.9955

MACH (1) = .230 ALPHA (4) = 15.840

TAP	11.000	12.000	13.000	21.000	22.000	23.000
D1						
.000	.0283	-.2486	.0419	.9876	.9541	.9757

MACH (1) = .230 ALPHA (5) = 19.010

TAP	11.000	12.000	13.000	21.000	22.000	23.000
D1						
.000	.0202	-.2932	.0122	.9798	.9583	.9447

NAAL 737 OA143 ORB/B66-NOSE PRB+VNT DR CPS (RFCA21) (14 MAY 75)

REFERENCE DATA

SREF =	2690.0000 SQ.FT.	XMRP =	1076.7000 IN.XO		
LREF =	474.8000 IN.	YMRP =	.0000 IN.YO		
BREF =	936.6800 IN.	ZMRP =	375.0000 IN.ZO		
SCALE =	.0405				

PARAMETRIC DATA

BETA =	.000	BDFLAP =	-11.700
ELEVON =	10.000	RUDDER =	.000
SPDBRK =	25.000	GRDPLN =	.000
LNGRPS =	1.000	LNDGDR =	100.000

SECTION (1)PROBE+VENT DR DEPENDENT VARIABLE CP

MACH (1) = .230 ALPHA (1) = .080

TAP	11.000	12.000	13.000	21.000	22.000	23.000
D1						
.000	.0427	-.1065	-.0906	.9977	.9925	.9961

MACH (1) = .230 ALPHA (2) = 5.340

TAP	11.000	12.000	13.000	21.000	22.000	23.000
D1						
.000	.0407	-.0842	-.0655	.9998	.9995	.9996

MACH (1) = .230 ALPHA (3) = 10.550

TAP	11.000	12.000	13.000	21.000	22.000	23.000
D1						
.000	.0248	-.0898	-.0740	.9987	.9987	.9946

MACH (1) = .230 ALPHA (4) = 15.810

TAP	11.000	12.000	13.000	21.000	22.000	23.000
D1						
.000	-.0019	-.1154	-.1046	.9974	.9770	.9300

MACH (1) = .230 ALPHA (5) = 18.980

TAP	11.000	12.000	13.000	21.000	22.000	23.000
D1						
.000	-.0184	-.1523	-.1443	.9899	.9819	.9168

NAAL 737 OA143 ORB/B66-NOSE PRB+VNT DR CPS (RFCA22) (14 MAY 75)

REFERENCE DATA

SREF =	2690.0000 SQ.FT.	XMRP =	1076.7000 IN.XO		
LREF =	474.8000 IN.	YMRP =	.0000 IN.YO		
BREF =	936.6800 IN.	ZMRP =	375.0000 IN.ZO		
SCALE =	.0405				

PARAMETRIC DATA

BETA =	-4.000	BDFLAP =	-11.700
ELEVON =	10.000	RUDDER =	.000
SPDBRK =	25.000	GRDPLN =	.000
LNGRPS =	1.000	LNDGDR =	100.000

SECTION (1)PROBE+VENT DR DEPENDENT VARIABLE CP

MACH (1) = .230 ALPHA (1) = .090

TAP	11.000	12.000	13.000	21.000	22.000	23.000
D1						
.000	.0415	-.0462	-.1446	1.0000	.9920	.9974

MACH (1) = .230 ALPHA (2) = 5.300

TAP	11.000	12.000	13.000	21.000	22.000	23.000
D1						
.000	.0357	-.0204	-.1262	1.0020	1.0004	1.0002

MACH (1) = .230 ALPHA (3) = 10.570

TAP	11.000	12.000	13.000	21.000	22.000	23.000
D1						
.000	.0224	-.0183	-.1439	.9980	.9986	.8045

MACH (1) = .230 ALPHA (4) = 15.810

TAP	11.000	12.000	13.000	21.000	22.000	23.000
D1						
.000	-.0140	-.0453	-.1748	.9943	.9979	.9243

MACH (1) = .230 ALPHA (5) = 18.980

TAP	11.000	12.000	13.000	21.000	22.000	23.000
D1						
.000	-.0341	-.0807	-.2149	.9884	.9881	.7906

NAAL 737 OA143 ORB/B66-NOSE PRB+VNT DR CPS (RFCA23) (14 MAY 75)

REFERENCE DATA

SREF = 2690.0000 SQ.FT. XMRP = 1076.7000 IN.XO
LREF = 474.8000 IN. YMRP = .0000 IN.YO
BREF = 936.6800 IN. ZMRP = 375.0000 IN.ZO
SCALE = .0405

PARAMETRIC DATA

BETA = -8.000 BDFLAP = -11.700
ELEVON = 10.000 RUDDER = .000
SPDBRK = 25.000 GRDPLN = .000
LNGRPS = 1.000 LNDGDR = 100.000

SECTION (1)PROBE+VENT DR DEPENDENT VARIABLE CP

MACH (1) = .230 ALPHA (1) = .100

TAP	11.000	12.000	13.000	21.000	22.000	23.000
D1						
.000	.0432	.0230	-.1886	1.0000	.9906	.9806

MACH (1) = .230 ALPHA (2) = 5.320

TAP	11.000	12.000	13.000	21.000	22.000	23.000
D1						
.000	.0310	.0540	-.1719	1.0002	.9996	.9983

MACH (1) = .230 ALPHA (3) = 10.590

TAP	11.000	12.000	13.000	21.000	22.000	23.000
D1						
.000	.0020	.0578	-.1917	.9993	.9999	.5042

MACH (1) = .230 ALPHA (4) = 15.850

TAP	11.000	12.000	13.000	21.000	22.000	23.000
D1						
.000	-.0043	.0354	-.2311	.9926	.9981	.8897

MACH (1) = .230 ALPHA (5) = 19.010

TAP	11.000	12.000	13.000	21.000	22.000	23.000
D1						
.000	-.0244	.0055	-.2726	.9847	.9909	.8669

NAAL 737 OA143 ORB/B66-NOSE PRB+VNT DR CPS (RFCA24) (14 MAY 75)

REFERENCE DATA

SREF =	2690.0000 SQ.FT.	XMRP =	1076.7000 IN.XO		
LREF =	474.8000 IN.	YMRP =	.0000 IN.YO		
BREF =	936.6800 IN.	ZMRP =	375.0000 IN.ZO		
SCALE =	.0405				

PARAMETRIC DATA

BETA =	4.000	BDFLAP =	-11.700
ELEVON =	10.000	RUDDER =	.000
SPDBRK =	25.000	GRDPLN =	.000
LNGRPS =	1.000	LNDGDR =	100.000

SECTION (1)PROBE+VENT DR DEPENDENT VARIABLE CP

MACH (1) = .230 ALPHA (1) = .070

TAP	11.000	12.000	13.000	21.000	22.000	23.000
D1						
.000	.0291	-.1621	-.0304	.9957	.9935	.9952

MACH (1) = .230 ALPHA (2) = 5.290

TAP	11.000	12.000	13.000	21.000	22.000	23.000
D1						
.000	.0340	-.1434	-.0034	.9990	.9993	.9994

MACH (1) = .230 ALPHA (3) = 10.530

TAP	11.000	12.000	13.000	21.000	22.000	23.000
D1						
.000	.0215	-.1512	-.0057	.9978	.8163	.9959

MACH (1) = .230 ALPHA (4) = 15.790

TAP	11.000	12.000	13.000	21.000	22.000	23.000
D1						
.000	-.0029	-.1879	-.0396	.9924	.9709	.9731

MACH (1) = .230 ALPHA (5) = 18.950

TAP	11.000	12.000	13.000	21.000	22.000	23.000
D1						
.000	-.0136	-.2243	-.0709	.9830	.8357	.9342

NAAL 737 OA143 ORB/B66-NOSE PRB+VNT DR CPS (RFCA25) (14 MAY 75)

REFERENCE DATA

SREF =	2690.0000 SQ.FT.	XMRP =	1076.7000 IN.XO		
LREF =	474.8000 IN.	YMRP =	.0000 IN.YO		
BREF =	936.6800 IN.	ZMRP =	375.0000 IN.ZO		
SCALE =	.0405				

PARAMETRIC DATA

BETA =	8.000	BDFLAP =	-11.700
ELEVON =	10.000	RUDDER =	.000
SPDBRK =	25.000	GRDPLN =	.000
LNGRPS =	1.000	LNDGDR =	100.000

SECTION (1)PROBE+VENT DR DEPENDENT VARIABLE CP

MACH (1) = .230 ALPHA (1) = .100

TAP	11.000	12.000	13.000	21.000	22.000	23.000
DI						
.000	.0168	-.2060	.0380	.9947	.9783	.9930

MACH (1) = .230 ALPHA (2) = 5.310

TAP	11.000	12.000	13.000	21.000	22.000	23.000
DI						
.000	.0246	-.1896	.0709	.9968	.9978	.9987

MACH (1) = .230 ALPHA (3) = 10.550

TAP	11.000	12.000	13.000	21.000	22.000	23.000
DI						
.000	.0189	-.2027	.0695	.9950	.5387	.9966

MACH (1) = .230 ALPHA (4) = 15.830

TAP	11.000	12.000	13.000	21.000	22.000	23.000
DI						
.000	.0279	-.2462	.0432	.9861	.9498	.9756

MACH (1) = .230 ALPHA (5) = 18.970

TAP	11.000	12.000	13.000	21.000	22.000	23.000
DI						
.000	.0225	-.2870	.0151	.9797	.9589	.9461

NAAL 737 OA143 ORB/B66-NOSE PRB+VNT DR CPS (RFCA26) (14 MAY 75)

REFERENCE DATA

SREF =	2690.0000 SQ.FT.	XMRP =	1076.7000 IN.XO		
LREF =	474.8000 IN.	YMRP =	.0000 IN.YO		
BREF =	936.6800 IN.	ZMRP =	375.0000 IN.ZO		
SCALE =	.0405				

PARAMETRIC DATA

BETA =	8.000	BDFLAP =	-11.700
ELEVON =	10.000	RUDDER =	.000
SPDBRK =	25.000	GRDPLN =	.000
LNGRPS =	.000	LNDGDR =	.000

SECTION (1)PROBE+VENT DR DEPENDENT VARIABLE CP

MACH (1) = .230 ALPHA (1) = .070

TAP	11.000	12.000	13.000	21.000	22.000	23.000
D1						
.000	.0138	-.1960	.0381	.9964	.9667	.9940

MACH (1) = .230 ALPHA (2) = 5.330

TAP	11.000	12.000	13.000	21.000	22.000	23.000
D1						
.000	.0212	-.1913	.0745	.9978	1.0004	.9998

MACH (1) = .230 ALPHA (3) = 10.570

TAP	11.000	12.000	13.000	21.000	22.000	23.000
D1						
.000	.0165	-.2115	.0757	.9957	1.0000	.9977

MACH (1) = .230 ALPHA (4) = 15.850

TAP	11.000	12.000	13.000	21.000	22.000	23.000
D1						
.000	.0285	-.2537	.0518	.9870	.9942	.9760

MACH (1) = .230 ALPHA (5) = 19.010

TAP	11.000	12.000	13.000	21.000	22.000	23.000
D1						
.000	.0201	-.3013	.0189	.9775	.9811	.9457

NAAL 737 OA143 ORB/B6S-NOSE PRB+VNT DR CPS (RFCA27) (14 MAY 75)

REFERENCE DATA

SREF =	2690.0000 SQ.FT.	XMRP =	1076.7000 IN.XO		
LREF =	474.8000 IN.	YMRP =	.0000 IN.YO		
BREF =	936.6800 IN.	ZMRP =	375.0000 IN.ZO		
SCALE =	.0405				

PARAMETRIC DATA

BETA =	8.000	BDFLAP =	-11.700
ELEVON =	10.000	RUDDER =	.000
SPDBRK =	25.000	GRDPLN =	.000
LNGRPS =	.000	LNDGDR =	40.000

SECTION (1)PROBE+VENT DR DEPENDENT VARIABLE CP

MACH (1) = .230 ALPHA (1) = .080

TAP	11.000	12.000	13.000	21.000	22.000	23.000
D1						
.000	.0155	-.2014	.0377	.9945	.9729	.9948

MACH (1) = .230 ALPHA (2) = 5.320

TAP	11.000	12.000	13.000	21.000	22.000	23.000
D1						
.000	.0209	-.1921	.0696	.9983	1.0000	1.0000

MACH (1) = .230 ALPHA (3) = 10.550

TAP	11.000	12.000	13.000	21.000	22.000	23.000
D1						
.000	.0178	-.2096	.0750	.9962	.9911	.9975

MACH (1) = .230 ALPHA (4) = 15.820

TAP	11.000	12.000	13.000	21.000	22.000	23.000
D1						
.000	.0282	-.2530	.0500	.9873	.9887	.9755

MACH (1) = .230 ALPHA (5) = 18.970

TAP	11.000	12.000	13.000	21.000	22.000	23.000
D1						
.000	.0224	-.3003	.0193	.9792	.9800	.9468

NAAL 737 OA143 ORB/B66-NOSE PRB+VNT DR CPS (RFCA29) (14 MAY 75)

REFERENCE DATA

SREF =	2690.0000 SQ.FT.	XMRP =	1076.7000 IN.XO		
LREF =	474.8000 IN.	YMRP =	.0000 IN.YO		
BREF =	936.6800 IN.	ZMRP =	375.0000 IN.ZO		
SCALE =	.0405				

PARAMETRIC DATA

BETA =	8.000	BDFLAP =	-11.700
ELEVON =	10.000	RUDDER =	.000
SPDBRK =	25.000	GRDPLN =	.000
LNGRPS =	.000	LNDGDR =	80.000

SECTION (1)PROBE+VENT DR DEPENDENT VARIABLE CP

MACH (1) = .230 ALPHA (1) = .090

TAP	11.000	12.000	13.000	21.000	22.000	23.000
DI						
.000	.0188	-.1994	.0426	.9961	.9729	.9948

MACH (1) = .230 ALPHA (2) = 5.330

TAP	11.000	12.000	13.000	21.000	22.000	23.000
DI						
.000	.0195	-.1927	.0700	.9985	.9995	.9996

MACH (1) = .230 ALPHA (3) = 10.560

TAP	11.000	12.000	13.000	21.000	22.000	23.000
DI						
.000	.0185	-.2044	.0741	.9981	.6543	.9981

MACH (1) = .230 ALPHA (4) = 15.810

TAP	11.000	12.000	13.000	21.000	22.000	23.000
DI						
.000	.0275	-.2547	.0471	.9896	.9230	.9772

MACH (1) = .230 ALPHA (5) = 18.970

TAP	11.000	12.000	13.000	21.000	22.000	23.000
DI						
.000	.0205	-.2950	.0151	.9809	.9099	.9460

NAAL 737 OA143 ORB/B66-NOSE PRB+VNT DR CPS (RFCA30) (14 MAY 75)

REFERENCE DATA

SREF =	2690.0000 SQ.FT.	XMRP =	1076.7000 IN.XO		
LREF =	474.8000 IN.	YMRP =	.0000 IN.YO		
BREF =	936.6800 IN.	ZMRP =	375.0000 IN.ZO		
SCALE =	.0405				

PARAMETRIC DATA

BETA =	.000	BDFLAP =	-11.700
ELEVON =	5.000	RUDDER =	.000
SPDBRK =	25.000	GRDPLN =	.000
LNGRPS =	1.000	LNDGDR =	100.000

SECTION (1)PROBE+VENT DR DEPENDENT VARIABLE CP

MACH (1) = .230 ALPHA (1) = .010

TAP	11.000	12.000	13.000	21.000	22.000	23.000
D1						
.000	.0380	-.1136	-.0960	1.0003	.9939	.9977

MACH (1) = .230 ALPHA (2) = 5.240

TAP	11.000	12.000	13.000	21.000	22.000	23.000
D1						
.000	.0389	-.0875	-.0689	.9995	1.0001	1.0003

MACH (1) = .230 ALPHA (3) = 10.470

TAP	11.000	12.000	13.000	21.000	22.000	23.000
D1						
.000	.0239	-.0914	-.0743	1.0017	1.0007	.9966

MACH (1) = .230 ALPHA (4) = 15.730

TAP	11.000	12.000	13.000	21.000	22.000	23.000
D1						
.000	-.0036	-.1156	-.1064	1.0000	.9731	.9365

MACH (1) = .230 ALPHA (5) = 18.890

TAP	11.000	12.000	13.000	21.000	22.000	23.000
D1						
.000	-.0252	-.1606	-.1486	.9913	.9781	.9253

NAAL 737 OA143 ORB/B66-NOSE PRB+VNT DR CPS (RFCA31) (14 MAY 75)

REFERENCE DATA

SREF =	2690.0000 SQ.FT.	XMRP =	1076.7000 IN.XO		
LREF =	474.8000 IN.	YMRP =	.0000 IN.YO		
BREF =	936.6800 IN.	ZMRP =	375.0000 IN.ZO		
SCALE =	.0405				

PARAMETRIC DATA

BETA =	-4.000	BDFLAP =	-11.700
ELEVON =	5.000	RUDDER =	.000
SPDBRK =	25.000	GRDPLN =	.000
LNGRPS =	1.000	LNDGDR =	100.000

SECTION (1)PROBE+VENT DR DEPENDENT VARIABLE CP

MACH (1) = .230 ALPHA (1) = .000

TAP	11.000	12.000	13.000	21.000	22.000	23.000
D1						
.000	.0421	-.0461	-.1458	1.0007	.9932	.9998

MACH (1) = .230 ALPHA (2) = 5.250

TAP	11.000	12.000	13.000	21.000	22.000	23.000
D1						
.000	.0363	-.0211	-.1251	1.0019	1.0003	1.0004

MACH (1) = .230 ALPHA (3) = 10.480

TAP	11.000	12.000	13.000	21.000	22.000	23.000
D1						
.000	.0222	-.0194	-.1429	1.0024	1.0015	.8214

MACH (1) = .230 ALPHA (4) = 15.760

TAP	11.000	12.000	13.000	21.000	22.000	23.000
D1						
.000	-.0157	-.0480	-.1772	.9961	.9993	.9278

MACH (1) = .230 ALPHA (5) = 18.910

TAP	11.000	12.000	13.000	21.000	22.000	23.000
D1						
.000	-.0322	-.0791	-.2132	.9904	.9850	.7858

NAAL 737 OA143 ORB/B66-NOSE PRB+VNT DR CPS (RFCA32) (14 MAY 75)

REFERENCE DATA

SREF =	2690.0000 SQ.FT.	XMRP =	1076.7000 IN.XO		
LREF =	474.8000 IN.	YMRP =	.0000 IN.YO		
BREF =	936.6800 IN.	ZMRP =	375.0000 IN.ZO		
SCALE =	.0405				

PARAMETRIC DATA

BETA =	-8.000	BDFLAP =	-11.700
ELEVON =	5.000	RUDDER =	.000
SPDBRK =	25.000	GRDPLN =	.000
LNGRPS =	1.000	LNDGDR =	100.000

SECTION (1)PROBE+VENT DR DEPENDENT VARIABLE CP

MACH (1) = .230 ALPHA (1) = .050

TAP	11.000	12.000	13.000	21.000	22.000	23.000
D1						
.000	.0438	.0207	-.1889	1.0001	.9914	.9835

MACH (1) = .230 ALPHA (2) = 5.250

TAP	11.000	12.000	13.000	21.000	22.000	23.000
D1						
.000	.0297	.0510	-.1737	1.0019	1.0009	.9983

MACH (1) = .230 ALPHA (3) = 10.520

TAP	11.000	12.000	13.000	21.000	22.000	23.000
D1						
.000	-.0006	.0541	-.1926	.9991	1.0007	.5188

MACH (1) = .230 ALPHA (4) = 15.790

TAP	11.000	12.000	13.000	21.000	22.000	23.000
D1						
.000	-.0036	.0372	-.2290	.9956	.9998	.8852

MACH (1) = .230 ALPHA (5) = 18.960

TAP	11.000	12.000	13.000	21.000	22.000	23.000
D1						
.000	-.0237	.0058	-.2715	.9841	.9926	.8815

NAAL 737 OA143 ORB/866-NOSE PRB+VNT DR CPS (RFCA33) (14 MAY 75)

REFERENCE DATA

SREF =	2690.0000 SQ.FT.	XMRP =	1076.7000 IN.XO
LREF =	474.8000 IN.	YMRP =	.0000 IN.YO
BREF =	936.6800 IN.	ZMRP =	375.0000 IN.ZO
SCALE =	.0405		

PARAMETRIC DATA

BETA =	4.000	BDFLAP =	-11.700
ELEVON =	5.000	RUDDER =	.000
SPDBRK =	25.000	GRDPLN =	.000
LNGRPS =	1.000	LNDGDR =	100.000

SECTION (1)PROBE+VENT DR DEPENDENT VARIABLE CP

MACH (1) = .230 ALPHA (1) = .010

TAP	11.000	12.000	13.000	21.000	22.000	23.000
D1						
.000	.0271	-.1674	-.0343	1.0008	.9950	.9968

MACH (1) = .230 ALPHA (2) = 5.230

TAP	11.000	12.000	13.000	21.000	22.000	23.000
D1						
.000	.0354	-.1443	-.0038	.9997	1.0010	1.0007

MACH (1) = .230 ALPHA (3) = 10.470

TAP	11.000	12.000	13.000	21.000	22.000	23.000
D1						
.000	.0212	-.1522	-.0054	.9997	.8468	.9972

MACH (1) = .230 ALPHA (4) = 15.750

TAP	11.000	12.000	13.000	21.000	22.000	23.000
D1						
.000	-.0016	-.1876	-.0374	.9949	.9539	.9742

MACH (1) = .230 ALPHA (5) = 18.910

TAP	11.000	12.000	13.000	21.000	22.000	23.000
D1						
.000	-.0120	-.2229	-.0690	.9875	.8720	.9355

NAAL 737 OA143 ORB/B66-NOSE PRB+VNT DR CPS (RFCA34) (14 MAY 75)

REFERENCE DATA

SREF =	2690.0000 SQ.FT.	XMRP =	1078.7000 IN.XO		
LREF =	474.8000 IN.	YMRP =	.0000 IN.YO		
BREF =	936.6800 IN.	ZMRP =	375.0000 IN.ZO		
SCALE =	.0405				

PARAMETRIC DATA

BETA =	8.000	BDFLAP =	-11.700
ELEVON =	5.000	RUDDER =	.000
SPDBRK =	25.000	GRDPLN =	.000
LNGRPS =	1.000	LNDGDR =	100.000

SECTION (1)PROBE+VENT DR DEPENDENT VARIABLE CP

MACH (1) = .230 ALPHA (1) = -4.170

TAP	11.000	12.000	13.000	21.000	22.000	23.000
D1						
.000	.0040	-.2368	-.0139	.9932	.9800	.9778

MACH (1) = .230 ALPHA (2) = -2.060

TAP	11.000	12.000	13.000	21.000	22.000	23.000
D1						
.000	.0044	-.2177	.0122	.9946	.9076	.9878

MACH (1) = .230 ALPHA (3) = .020

TAP	11.000	12.000	13.000	21.000	22.000	23.000
D1						
.000	.0171	-.2063	.0347	.9949	.9765	.9942

MACH (1) = .230 ALPHA (4) = 2.090

TAP	11.000	12.000	13.000	21.000	22.000	23.000
D1						
.000	.0239	-.1977	.0511	.9969	.9986	.9972

MACH (1) = .230 ALPHA (5) = 4.170

TAP	11.000	12.000	13.000	21.000	22.000	23.000
D1						
.000	.0236	-.1904	.0632	.9957	.9993	.9994

MACH (1) = .230 ALPHA (6) = 6.270

TAP	11.000	12.000	13.000	21.000	22.000	23.000
D1						
.000	.0233	-.1919	.0710	.9982	.9775	1.0001

MACH (1) = .230 ALPHA (7) = 8.370

TAP	11.000	12.000	13.000	21.000	22.000	23.000
D1						
.000	.0279	-.1960	.0736	.9956	.7241	.9990

MACH (1) = .230 ALPHA (8) = 10.470

TAP	11.000	12.000	13.000	21.000	22.000	23.000
D1						
.000	.0188	-.2028	.0681	.9961	.5381	.9981

MACH (1) = .230 ALPHA (9) = 12.570

TAP	11.000	12.000	13.000	21.000	22.000	23.000
D1						
.000	.0198	-.2135	.0624	.9928	.8507	.9925

MACH (1) = .230 ALPHA (10) = 14.650

TAP	11.000	12.000	13.000	21.000	22.000	23.000
D1						
.000	.0275	-.2357	.0503	.9899	.9381	.9835

NAAL 737 OA143 ORB/B66-NOSE PRB+VNT DR CPS (RFCA34)

SECTION (1)PROBE+VENT DR DEPENDENT VARIABLE CP

MACH (1) = .230 ALPHA (11) = 16.770

TAP	11.000	12.000	13.000	21.000	22.000	23.000
D1						
.000	.0222	-.2584	.0351	.9863	.9689	.9690

MACH (1) = .230 ALPHA (12) = 18.860

TAP	11.000	12.000	13.000	21.000	22.000	23.000
D1						
.000	.0144	-.2878	.0138	.9796	.9475	.9471

NAAL 737 OA143 ORB/B65-NOSE PRB+VNT DR CPS (RFCA35) (14 MAY 75)

REFERENCE DATA

SREF =	2690.0000 SQ.FT.	XMRP =	1076.7000 IN.XO		
LREF =	474.8000 IN.	YMRP =	.0000 IN.YO		
BREF =	936.6800 IN.	ZMRP =	375.0000 IN.ZO		
SCALE =	.0405				

PARAMETRIC DATA

BETA =	.000	BDFLAP =	-11.700
ELEVON =	5.000	RUDDER =	.000
SPDBRK =	25.000	GRDPLN =	.000
LNGRPS =	1.000	LNDGDR =	100.000

SECTION (1)PROBE+VENT DR DEPENDENT VARIABLE CP

MACH (1) = .230 ALPHA (1) = .030

TAP	11.000	12.000	13.000	21.000	22.000	23.000
D1						
.000	.0414	-.1104	-.0944	.9997	.9936	.9974

MACH (1) = .230 ALPHA (2) = 5.230

TAP	11.000	12.000	13.000	21.000	22.000	23.000
D1						
.000	.0376	-.0883	-.0716	.9978	1.0000	1.0002

MACH (1) = .230 ALPHA (3) = 10.470

TAP	11.000	12.000	13.000	21.000	22.000	23.000
D1						
.000	.0242	-.0902	-.0757	1.0020	1.0010	.9965

MACH (1) = .230 ALPHA (4) = 15.750

TAP	11.000	12.000	13.000	21.000	22.000	23.000
D1						
.000	-.0050	-.1178	-.1100	.9958	.9736	.9375

MACH (1) = .230 ALPHA (5) = 18.910

TAP	11.000	12.000	13.000	21.000	22.000	23.000
D1						
.000	-.0242	-.1593	-.1505	.9905	.9783	.9225

NAAL 737 OA143 ORB/B65-NOSE PRB+VNT DR CPS (RFCA36) (14 MAY 75)

REFERENCE DATA

SREF =	2690.0000 SQ.FT.	XMRP =	1078.7000 IN.XO		
LREF =	474.8000 IN.	YMRP =	.0000 IN.YO		
BREF =	936.6800 IN.	ZMRP =	375.0000 IN.ZO		
SCALE =	.0405				

PARAMETRIC DATA

BETA =	-4.000	BDFLAP =	-11.700
ELEVON =	5.000	RUDDER =	.000
SPDBRK =	25.000	GRDPLN =	.000
LNGRPS =	1.000	LNDGDR =	100.000

SECTION (1)PROBE+VENT DR DEPENDENT VARIABLE CP

MACH (1) = .230 ALPHA (1) = .000

TAP	11.000	12.000	13.000	21.000	22.000	23.000
D1						
.000	.0415	-.0478	-.1479	1.0006	.9932	.9987

MACH (1) = .230 ALPHA (2) = 5.260

TAP	11.000	12.000	13.000	21.000	22.000	23.000
D1						
.000	.0341	-.0234	-.1296	1.0021	1.0014	1.0012

MACH (1) = .230 ALPHA (3) = 10.490

TAP	11.000	12.000	13.000	21.000	22.000	23.000
D1						
.000	.0201	-.0220	-.1461	1.0018	1.0005	.8133

MACH (1) = .230 ALPHA (4) = 15.770

TAP	11.000	12.000	13.000	21.000	22.000	23.000
D1						
.000	-.0163	-.0475	-.1782	.9940	.9985	.9243

MACH (1) = .230 ALPHA (5) = 18.920

TAP	11.000	12.000	13.000	21.000	22.000	23.000
D1						
.000	-.0331	-.0783	-.2139	.9882	.9840	.7851

NAAL 737 OA143 ORB/B65-NOSE PRB+VNT DR CPS (RFCA37) (14 MAY 75)

REFERENCE DATA

SREF =	2690.0000 SQ.FT.	XMRP =	1076.7000 IN.XO		
LREF =	474.8000 IN.	YMRP =	.0000 IN.YO		
BREF =	936.6800 IN.	ZMRP =	375.0000 IN.ZO		
SCALE =	.0405				

PARAMETRIC DATA

BETA =	-8.000	BDFLAP =	-11.700
ELEVON =	5.000	RUDDER =	.000
SPDBRK =	25.000	GRDPLN =	.000
LNGRPS =	1.000	LNDGDR =	100.000

SECTION (1)PROBE+VENT DR DEPENDENT VARIABLE CP

MACH (1) = .230 ALPHA (1) = .030

TAP	11.000	12.000	13.000	21.000	22.000	23.000
D1						
.000	.0448	.0233	-.1903	.9998	.9908	.9789

MACH (1) = .230 ALPHA (2) = 5.250

TAP	11.000	12.000	13.000	21.000	22.000	23.000
D1						
.000	.0323	.0543	-.1730	1.0001	1.0014	.9992

MACH (1) = .230 ALPHA (3) = 10.510

TAP	11.000	12.000	13.000	21.000	22.000	23.000
D1						
.000	.0017	.0569	-.1920	1.0004	1.0013	.5019

MACH (1) = .230 ALPHA (4) = 15.790

TAP	11.000	12.000	13.000	21.000	22.000	23.000
D1						
.000	-.0040	.0367	-.2304	.9941	.9993	.8879

MACH (1) = .230 ALPHA (5) = 18.950

TAP	11.000	12.000	13.000	21.000	22.000	23.000
D1						
.000	-.0234	.0062	-.2723	.9835	.9926	.8790

NAAL 737 OA143 ORB/B65-NOSE PRB+VNT DR CPS (RFCA38) (14 MAY 75)

REFERENCE DATA

SREF =	2690.0000 SQ.FT.	XMRP =	1076.7000 IN.XO		
LREF =	474.8000 IN.	YMRP =	.0000 IN.YO		
BREF =	936.6800 IN.	ZMRP =	375.0000 IN.ZO		
SCALE =	.0405				

PARAMETRIC DATA

BETA =	4.000	BDFLAP =	-11.700
ELEVON =	5.000	RUDDER =	.000
SPDBRK =	25.000	GRDPLN =	.000
LNGRPS =	1.000	LNDGDR =	100.000

SECTION (1)PROBE+VENT DR DEPENDENT VARIABLE CP

MACH (1) = .230 ALPHA (1) = .010

TAP	11.000	12.000	13.000	21.000	22.000	23.000
D1						
.000	.0310	-.1637	-.0318	.9982	.9946	.9962

MACH (1) = .230 ALPHA (2) = 5.240

TAP	11.000	12.000	13.000	21.000	22.000	23.000
D1						
.000	.0328	-.1470	-.0070	1.0018	1.0008	1.0005

MACH (1) = .230 ALPHA (3) = 10.090

TAP	11.000	12.000	13.000	21.000	22.000	23.000
D1						
.000	-.0147	-.2280	-.0741	.9894	.8757	.9392

MACH (1) = .230 ALPHA (4) = 10.460

TAP	11.000	12.000	13.000	21.000	22.000	23.000
D1						
.000	.0215	-.1525	-.0077	1.0002	.8548	.9973

MACH (1) = .230 ALPHA (5) = 15.730

TAP	11.000	12.000	13.000	21.000	22.000	23.000
D1						
.000	-.0016	-.1885	-.0394	.9946	.9491	.9743

NAAL 737 OA143 ORB/B65-NOSE PRB+VNT DR CPS (RFCA39) (14 MAY 75)

REFERENCE DATA

SREF =	2690.0000 SQ.FT.	XMRP =	1076.7000 IN.XO		
LREF =	474.8000 IN.	YMRP =	.0000 IN.YO		
BREF =	936.6800 IN.	ZMRP =	375.0000 IN.ZO		
SCALE =	.0405				

PARAMETRIC DATA

BETA =	8.000	BDFLAP =	-11.700
ELEVON =	5.000	RUDDER =	.000
SPDBRK =	25.000	GRDPLN =	.000
LNGRPS =	1.000	LNDGDR =	100.000

SECTION (1)PROBE+VENT DR DEPENDENT VARIABLE CP

MACH (1) = .230 ALPHA (1) = .020

TAP	11.000	12.000	13.000	21.000	22.000	23.000
D1						
.000	.0175	-.2068	.0338	.9967	.9796	.9953

MACH (1) = .230 ALPHA (2) = 5.250

TAP	11.000	12.000	13.000	21.000	22.000	23.000
D1						
.000	.0242	-.1908	.0661	.9951	.9984	.9991

MACH (1) = .230 ALPHA (3) = 10.460

TAP	11.000	12.000	13.000	21.000	22.000	23.000
D1						
.000	.0208	-.2007	.0680	.9943	.5273	.9973

MACH (1) = .230 ALPHA (4) = 15.740

TAP	11.000	12.000	13.000	21.000	22.000	23.000
D1						
.000	.0259	-.2481	.0415	.9884	.9569	.9773

MACH (1) = .230 ALPHA (5) = 18.890

TAP	11.000	12.000	13.000	21.000	22.000	23.000
D1						
.000	.0138	-.2882	.0131	.9799	.9468	.9472

NAAL 737 OA143 ORB/B67-NOSE PRB+VNT DR CPS (RFCA56) (14 MAY 75)

REFERENCE DATA

SREF =	2690.0000 SQ.FT.	XMRP =	1076.7000 IN.XO		
LREF =	474.8000 IN.	YMRP =	.0000 IN.YO		
BREF =	936.6800 IN.	ZMRP =	375.0000 IN.ZO		
SCALE =	.0405				

PARAMETRIC DATA

BETA =	.000	BDFLAP =	-11.700
ELEVON =	5.000	RUDDER =	.000
SPDBRK =	25.000	GRDPLN =	.000
LNGRPS =	1.000	LNDGDR =	100.000

SECTION (1)PROBE+VENT DR DEPENDENT VARIABLE CP

MACH (1) = .230 ALPHA (1) = -4.160

TAP	11.000	12.000	13.000	21.000	22.000	23.000
D1						
.000	-.0524	-.1467	-.1367	-.0554	.9708	.9836

MACH (1) = .230 ALPHA (2) = -2.080

TAP	11.000	12.000	13.000	21.000	22.000	23.000
D1						
.000	-.0485	-.1254	-.1120	-.0536	.9845	.9921

MACH (1) = .230 ALPHA (3) = .020

TAP	11.000	12.000	13.000	21.000	22.000	23.000
D1						
.000	-.0452	-.1109	-.0949	-.0523	.9926	.9964

MACH (1) = .230 ALPHA (4) = 2.110

TAP	11.000	12.000	13.000	21.000	22.000	23.000
D1						
.000	-.0390	-.0971	-.0816	-.0499	.9971	.9981

MACH (1) = .230 ALPHA (5) = 4.200

TAP	11.000	12.000	13.000	21.000	22.000	23.000
D1						
.000	-.0329	-.0898	-.0740	-.0479	.9990	.9991

MACH (1) = .230 ALPHA (6) = 6.290

TAP	11.000	12.000	13.000	21.000	22.000	23.000
D1						
.000	-.0289	-.0879	-.0731	-.0486	.9991	.9989

MACH (1) = .230 ALPHA (7) = 8.400

TAP	11.000	12.000	13.000	21.000	22.000	23.000
D1						
.000	-.0231	-.0863	-.0722	-.0465	.9991	.9983

MACH (1) = .230 ALPHA (8) = 10.490

TAP	11.000	12.000	13.000	21.000	22.000	23.000
D1						
.000	-.0194	-.0915	-.0776	-.0476	.9993	.9951

MACH (1) = .230 ALPHA (9) = 12.590

TAP	11.000	12.000	13.000	21.000	22.000	23.000
D1						
.000	-.0174	-.0984	-.0930	-.0492	.9930	.9749

MACH (1) = .230 ALPHA (10) = 14.700

TAP	11.000	12.000	13.000	21.000	22.000	23.000
D1						
.000	-.0144	-.1090	-.1045	-.0506	.8733	.7959

NAAL 737 OA143 ORB/B67-NOSE PRB+VNT DR CPS (RFCA56)

SECTION (1)PROBE+VENT DR DEPENDENT VARIABLE CP

MACH (1) = .230 ALPHA (11) = 16.800

TAP	11.000	12.000	13.000	21.000	22.000	23.000
D1						
.000	-.0110	-.1307	-.1231	-.0515	.9909	.9460

MACH (1) = .230 ALPHA (12) = 18.910

TAP	11.000	12.000	13.000	21.000	22.000	23.000
D1						
.000	-.0066	-.1568	-.1517	-.0500	.9784	.9188

NAAL 737 OA143 ORB/B67-NOSE PRB+VNT DR CPS (RFCA60) (14 MAY 75)

REFERENCE DATA

SREF =	2690.0000 SQ.FT.	XMRP =	1076.7000 IN.XO		
LREF =	474.8000 IN.	YMRP =	.0000 IN.YO		
BREF =	936.6800 IN.	ZMRP =	375.0000 IN.ZO		
SCALE =	.0405				

PARAMETRIC DATA

BETA =	8.000	BDFLAP =	-11.700
ELEVON =	5.000	RUDDER =	.000
SPDBRK =	25.000	GRDPLN =	.000
LNGRPS =	1.000	LNDGDR =	100.000

SECTION (1)PROBE+VENT DR DEPENDENT VARIABLE CP

MACH (1) = .230 ALPHA (1) = -4.130

TAP	11.000	12.000	13.000	21.000	22.000	23.000
D1						
.000	-.0505	-.2363	-.0162	-.0529	.9809	.9790

MACH (1) = .230 ALPHA (2) = -2.050

TAP	11.000	12.000	13.000	21.000	22.000	23.000
D1						
.000	-.0464	-.2188	.0112	-.0486	.9910	.9884

MACH (1) = .230 ALPHA (3) = .020

TAP	11.000	12.000	13.000	21.000	22.000	23.000
D1						
.000	-.0445	-.2056	.0332	-.0487	.9960	.9945

MACH (1) = .230 ALPHA (4) = 2.120

TAP	11.000	12.000	13.000	21.000	22.000	23.000
D1						
.000	-.0410	-.1981	.0489	-.0466	.9987	.9980

MACH (1) = .230 ALPHA (5) = 4.180

TAP	11.000	12.000	13.000	21.000	22.000	23.000
D1						
.000	-.0408	-.1901	.0627	-.0487	.9997	.9997

MACH (1) = .230 ALPHA (6) = 6.290

TAP	11.000	12.000	13.000	21.000	22.000	23.000
D1						
.000	-.0411	-.1913	.0697	-.0520	.9451	.9991

MACH (1) = .230 ALPHA (7) = 8.380

TAP	11.000	12.000	13.000	21.000	22.000	23.000
D1						
.000	-.0390	-.1984	.0708	-.0526	.7217	1.0001

MACH (1) = .230 ALPHA (8) = 9.020

TAP	11.000	12.000	13.000	21.000	22.000	23.000
D1						
.000	-.0425	-.2598	.0322	-.0535	.9771	.9710

MACH (1) = .230 ALPHA (9) = 10.480

TAP	11.000	12.000	13.000	21.000	22.000	23.000
D1						
.000	-.0404	-.2021	.0679	-.0565	.5468	.9979

MACH (1) = .230 ALPHA (10) = 12.590

TAP	11.000	12.000	13.000	21.000	22.000	23.000
D1						
.000	-.0400	-.2139	.0610	-.0578	.8483	.9927

NAAL 737 OA143 ORB/B67-NOSE PRB+VNT DR CPS (RFCA60)

SECTION (1)PROBE+VENT DR DEPENDENT VARIABLE CP

MACH (1) = .230 ALPHA (11) = 14.680

TAP	11.000	12.000	13.000	21.000	22.000	23.000
D1						
.000	-.0394	-.2341	.0482	-.0582	.9420	.9840

MACH (1) = .230 ALPHA (12) = 18.890

TAP	11.000	12.000	13.000	21.000	22.000	23.000
D1						
.000	-.0384	-.2864	.0115	-.0612	.9607	.9484

NAAL 737 OA143 ORB/B66-MAIN GEAR FRONT WALL CPS (RFCE01) (14 MAY 75)

REFERENCE DATA

SREF =	2690.0000 SQ.FT.	XMRP =	1076.7000 IN.XO		
LREF =	474.8000 IN.	YMRP =	.0000 IN.YO		
BREF =	936.6800 IN.	ZMRP =	375.0000 IN.ZO		
SCALE =	.0405				

PARAMETRIC DATA

BETA =	.000	BDFLAP =	-11.700
ELEVON =	5.000	RUDDER =	.000
SPDBRK =	25.000	GRDPLN =	1.000
LNGRPS =	1.000	LNDGDR =	100.000

SECTION (1)MN GR FRT WAL CPS DEPENDENT VARIABLE CP

MACH (1) = .200 ALPHA (1) = .010

X/LD	.050	.500	.950
X/LW			
.050	-.0374	-.0379	-.0286
.500	-.0500	-.0450	-.0328
.950	-.0059	-.0210	-.0147

MACH (1) = .200 ALPHA (2) = 5.380

X/LD	.050	.500	.950
X/LW			
.050	.2807	.2236	.2516
.500	.2211	.2232	.2361
.950	.2503	.2328	.2324

MACH (1) = .200 ALPHA (3) = 10.710

X/LD	.050	.500	.950
X/LW			
.050	.4411	.3888	.4033
.500	.3667	.3730	.3892
.950	.3908	.3900	.3954

MACH (1) = .200 ALPHA (4) = 16.140

X/LD	.050	.500	.950
X/LW			
.050	.5570	.5278	.5410
.500	.5319	.5043	.5261
.950	.5496	.5315	.5307

MACH (1) = .200 ALPHA (5) = 19.380

X/LD	.050	.500	.950
X/LW			
.050	.6583	.5940	.6169
.500	.6218	.5694	.5752
.950	.6484	.6120	.6140

NAAL 737 OA143 ORB/B66-MAIN GEAR FRONT WALL CPS (RFCE02) (14 MAY 75)

REFERENCE DATA

SREF =	2690.0000 SQ.FT.	XMRP =	1076.7000 IN.XO		
LREF =	1474.8000 IN.	YMRP =	.0000 IN.YO		
BREF =	936.6800 IN.	ZMRP =	375.0000 IN.ZO		
SCALE =	.0405				

PARAMETRIC DATA

BETA =	-4.000	BDFLAP =	-11.700
ELEVON =	5.000	RUDDER =	.000
SPDBRK =	25.000	GRDPLN =	1.000
LNGRPS =	1.000	LNDGDR =	100.000

SECTION (1)MN GR FRT WAL CPS DEPENDENT VARIABLE CP

MACH (1) = .200 ALPHA (1) = .010

X/LD	.050	.500	.950
X/LW			
.050	-.1124	-.1099	-.0994
.500	-.1623	-.1468	-.1116
.950	-.0587	-.1099	-.0927

MACH (1) = .200 ALPHA (2) = 5.370

X/LD	.050	.500	.950
X/LW			
.050	.1778	.1803	.1857
.500	.1836	.1807	.1882
.950	.1840	.1844	.1865

MACH (1) = .200 ALPHA (3) = 10.760

X/LD	.050	.500	.950
X/LW			
.050	.4802	.4153	.4265
.500	.3737	.3924	.4132
.950	.4336	.4186	.4195

MACH (1) = .200 ALPHA (4) = 16.150

X/LD	.050	.500	.950
X/LW			
.050	.5935	.5562	.5755
.500	.5324	.5438	.5549
.950	.5549	.5521	.5582

MACH (1) = .200 ALPHA (5) = 19.360

X/LD	.050	.500	.950
X/LW			
.050	.6615	.6381	.6525
.500	.6410	.6254	.6398
.950	.6533	.6410	.6439

NAAL 737 OA143 ORB/B66-MAIN GEAR FRONT WALL CPS (RFCE03) (14 MAY 75)

REFERENCE DATA

SREF =	2690.0000 SQ.FT.	XMRP =	1076.7000 IN.XO		
LREF =	474.8000 IN.	YMRP =	.0000 IN.YO		
BREF =	936.6800 IN.	ZMRP =	375.0000 IN.ZO		
SCALE =	.0405				

PARAMETRIC DATA

BETA =	-8.000	BDFLAP =	-11.700
ELEVON =	5.000	RUDDER =	.000
SPDBRK =	25.000	GRDPLN =	1.000
LNGRPS =	1.000	LNDGDR =	100.000

SECTION (1)MN GR FRT WAL CPS DEPENDENT VARIABLE CP

MACH (1) = .200 ALPHA (1) = .030

X/LD	.050	.500	.950
X/LW			
.050	-.2793	-.2969	-.2889
.500	-.3279	-.3422	-.3233
.950	-.2084	-.2646	-.4369

MACH (1) = .200 ALPHA (2) = 5.380

X/LD	.050	.500	.950
X/LW			
.050	.1201	.1201	.1335
.500	.1151	.1181	.1301
.950	.1693	.1451	.1489

MACH (1) = .200 ALPHA (3) = 10.760

X/LD	.050	.500	.950
X/LW			
.050	.4196	.3931	.4187
.500	.3856	.3802	.4009
.950	.3972	.3852	.3910

MACH (1) = .200 ALPHA (4) = 16.170

X/LD	.050	.500	.950
X/LW			
.050	.6212	.5591	.5831
.500	.5343	.5492	.5674
.950	.5757	.5707	.5732

MACH (1) = .200 ALPHA (5) = 19.400

X/LD	.050	.500	.950
X/LW			
.050	.6839	.6428	.6593
.500	.6284	.6346	.6457
.950	.6465	.6457	.6490

NAAL 737 OA143 ORB/B66-MAIN GEAR FRONT WALL CPS (RFCE04) (14 MAY 75)

REFERENCE DATA

SREF =	2690.0000 SQ.FT.	XMRP =	1076.7000 IN.XO
LREF =	474.8000 IN.	YMRP =	.0000 IN.YO
BREF =	936.6800 IN.	ZMRP =	375.0000 IN.ZO
SCALE =	.0405		

PARAMETRIC DATA

BETA	4.000	BDFLAP =	-11.700
ELEVON =	5.000	RUDDER =	.000
SPDBRK =	25.000	GRDPLN =	1.000
LNGRPS =	1.000	LNDGDR =	100.000

SECTION (1)MN GR FRT WAL CPS DEPENDENT VARIABLE CP

MACH (1) = .200 ALPHA (1) = .000

X/LD	.050	.500	.950
X/LW			
.050	.0570	.0274	.0616
.500	.0265	.0194	.0424
.950	.0365	.0265	.0311

MACH (1) = .200 ALPHA (2) = 5.340

X/LD	.050	.500	.950
X/LW			
.050	.2522	.2072	.2134
.500	.1880	.1926	.1984
.950	.2084	.2051	.2076

MACH (1) = .200 ALPHA (3) = 10.730

X/LD	.050	.500	.950
X/LW			
.050	.4210	.3857	.4010
.500	.3907	.3691	.3869
.950	.4035	.3840	.3932

MACH (1) = .200 ALPHA (4) = 16.140

X/LD	.050	.500	.950
X/LW			
.050	.6146	.5250	.5617
.500	.5625	.4948	.4874
.950	.5869	.5374	.5435

MACH (1) = .200 ALPHA (5) = 19.370

X/LD	.050	.500	.950
X/LW			
.050	.7099	.6017	.6484
.500	.6341	.5578	.5709
.950	.6624	.5873	.6283

NAAL 737 OA143 ORB/866-MAIN GEAR FRONT WALL CPS (RFCE05) (14 MAY 75)

REFERENCE DATA

SREF =	2890.0000 SQ.FT.	XMRP =	1076.7000 IN.XO		
LREF =	474.8000 IN.	YMRP =	.0000 IN.YO		
BREF =	936.6800 IN.	ZMRP =	375.0000 IN.ZO		
SCALE =	.0405				

PARAMETRIC DATA

BETA =	8.000	BDFLAP =	-11.700
ELEVON =	5.000	RUDDER =	.000
SPDBRK =	25.000	GRDPLN =	1.000
LNGRPS =	1.000	LNDGDR =	100.000

SECTION (1)MN OR FRT WAL CPS DEPENDENT VARIABLE CP

MACH (1) = .200 ALPHA (1) = .030

X/LD	.050	.500	.950
X/LW			
.050	.0806	.0440	.0668
.500	.0373	.0360	.0510
.950	.0573	.0448	.0477

MACH (1) = .200 ALPHA (2) = 5.360

X/LD	.050	.500	.950
X/LW			
.050	.3004	.2587	.2821
.500	.2479	.2421	.2637
.950	.2654	.2567	.2729

MACH (1) = .200 ALPHA (3) = 10.770

X/LD	.050	.500	.950
X/LW			
.050	.4566	.3919	.4334
.500	.4143	.3480	.3828
.950	.4442	.4122	.4172

MACH (1) = .200 ALPHA (4) = 16.160

X/LD	.050	.500	.950
X/LW			
.050	.6489	.5131	.5676
.500	.5565	.4540	.4792
.950	.5936	.5044	.5329

MACH (1) = .200 ALPHA (5) = 19.390

X/LD	.050	.500	.950
X/LW			
.050	.7124	.5948	.6433
.500	.6199	.5414	.5767
.950	.6676	.5644	.6388

NAAL 737 OA143 ORB/B66-MAIN GEAR FRONT WALL CPS (RFCE06) (14 MAY 75)

REFERENCE DATA

SREF =	2690.0000 SQ.FT.	XMRP =	1076.7000 IN.XO		
LREF =	474.8000 IN.	YMRP =	.0000 IN.YO		
BREF =	936.6800 IN.	ZMRP =	375.0000 IN.ZO		
SCALE =	.0405				

PARAMETRIC DATA

BETA =	.000	BDFLAP =	-11.700
ELEVON =	10.000	RUDDER =	.000
SPDBRK =	25.000	GRDPLN =	1.000
LNGRPS =	1.000	LNDGDR =	100.000

SECTION (1)MN GR FRT WAL CPS DEPENDENT VARIABLE CP

MACH (1) = .200 ALPHA (1) = .110

X/LD	.050	.500	.950
X/LW			
.050	-.0038	-.0022	.0015
.500	-.0106	-.0080	.0015
.950	.0255	.0141	.0221

MACH (1) = .200 ALPHA (2) = 5.470

X/LD	.050	.500	.950
X/LW			
.050	.3160	.2561	.2821
.500	.2477	.2523	.2645
.950	.2770	.2620	.2615

MACH (1) = .200 ALPHA (3) = 10.840

X/LD	.050	.500	.950
X/LW			
.050	.4578	.4070	.4194
.500	.3764	.3917	.4012
.950	.4053	.4053	.4103

MACH (1) = .200 ALPHA (4) = 16.230

X/LD	.050	.500	.950
X/LW			
.050	.5754	.5432	.5581
.500	.5494	.5176	.5416
.950	.5713	.5477	.5490

MACH (1) = .200 ALPHA (5) = 19.450

X/LD	.050	.500	.950
X/LW			
.050	.6730	.6086	.6358
.500	.6375	.5900	.5929
.950	.6639	.6243	.6309

NAAL 737 OA143 ORB/B66-MAIN GEAR FRONT WALL CPS (RFCE07) (14 MAY 75)

REFERENCE DATA

SREF =	2690.0000 SQ.FT.	XMRP =	1076.7000 IN.XO		
LREF =	474.8000 IN.	YMRP =	.0000 IN.YO		
BREF =	936.6800 IN.	ZMRP =	375.0000 IN.ZO		
SCALE =	.0405				

PARAMETRIC DATA

BETA =	-4.000	BDFLAP =	-11.700
ELEVON =	10.000	RUDDER =	.000
SPDBRK =	25.000	GRDPLN =	1.000
LNGRPS =	1.000	LNDGDR =	100.000

SECTION (1)MN GR FRT WAL CPS DEPENDENT VARIABLE CP

MACH (1) = .200 ALPHA (1) = .130

X/LD	.050	.500	.950
X/LW			
.050	-.0758	-.0728	-.0620
.500	-.1239	-.1017	-.0741
.950	-.0239	-.0657	-.0565

MACH (1) = .200 ALPHA (2) = 5.470

X/LD	.050	.500	.950
X/LW			
.050	.2083	.2058	.2141
.500	.2083	.2058	.2145
.950	.2095	.2099	.2124

MACH (1) = .200 ALPHA (3) = 10.870

X/LD	.050	.500	.950
X/LW			
.050	.5019	.4373	.4477
.500	.3957	.4094	.4369
.950	.4557	.4448	.4440

MACH (1) = .200 ALPHA (4) = 16.240

X/LD	.050	.500	.950
X/LW			
.050	.6117	.5741	.5919
.500	.5530	.5634	.5770
.950	.5724	.5745	.5828

MACH (1) = .200 ALPHA (5) = 19.450

X/LD	.050	.500	.950
X/LW			
.050	.6735	.6534	.6649
.500	.6468	.6407	.6579
.950	.6620	.6505	.6604

NAAL 737 OA143 ORB/B66-MAIN GEAR FRONT WALL CPS (RFCE08) (14 MAY 75)

REFERENCE DATA

SREF =	2690.0000 SQ.FT.	XMRP =	1076.7000 IN.XO		
LREF =	474.8000 IN.	YMRP =	.0000 IN.YO		
BREF =	936.6800 IN.	ZMRP =	375.0000 IN.ZO		
SCALE =	.0405				

PARAMETRIC DATA

BETA =	-8.000	BDFLAP =	-11.700
ELEVON =	10.000	RUDDER =	.000
SPDBRK =	25.000	GRDPLN =	1.000
LNGRPS =	1.000	LNDGDR =	100.000

SECTION (1)MN GR FRT WAL CPS DEPENDENT VARIABLE CP

MACH (1) = .200 ALPHA (1) = .120

X/LD	.050	.500	.950
X/LW			
.050	-.2411	-.2558	-.2432
.500	-.2135	-.2969	-.2726
.950	-.1262	-.1648	-.3737

MACH (1) = .200 ALPHA (2) = 5.490

X/LD	.050	.500	.950
X/LW			
.050	.1522	.1513	.1617
.500	.1463	.1476	.1588
.950	.1955	.1730	.1784

MACH (1) = .200 ALPHA (3) = 10.870

X/LD	.050	.500	.950
X/LW			
.050	.4493	.4103	.4422
.500	.4153	.4054	.4261
.950	.4265	.4132	.4182

MACH (1) = .200 ALPHA (4) = 16.230

X/LD	.050	.500	.950
X/LW			
.050	.6341	.5739	.5957
.500	.5536	.5619	.5792
.950	.5895	.5846	.5867

MACH (1) = .200 ALPHA (5) = 19.440

X/LD	.050	.500	.950
X/LW			
.050	.6973	.6602	.6775
.500	.6342	.6507	.6664
.950	.6548	.6577	.6660

NAAL 737 OA143 ORB/B66-MAIN GEAR FRONT WALL CPS (RFCE09) (14 MAY 75)

REFERENCE DATA

SREF =	2690.0000 SQ.FT.	XMRP =	1076.7000 IN.XO		
LREF =	474.8000 IN.	YMRP =	.0000 IN.YO		
BREF =	936.6800 IN.	ZMRP =	375.0000 IN.ZO		
SCALE =	.0405				

PARAMETRIC DATA

BETA =	4.000	BDFLAP =	-11.700
ELEVON =	10.000	RUDDER =	.000
SPDBRK =	25.000	GRDPLN =	1.000
LNGRPS =	1.000	LNDGDR =	100.000

SECTION (1)MN GR FRT WAL CPS DEPENDENT VARIABLE CP

MACH (1) = .200 ALPHA (1) = .110

X/LD	.050	.500	.950
X/LW			
.050	.0928	.0586	.0920
.500	.0561	.0520	.0728
.950	.0670	.0578	.0628

MACH (1) = .200 ALPHA (2) = 5.450

X/LD	.050	.500	.950
X/LW			
.050	.2681	.2302	.2339
.500	.2102	.2185	.2227
.950	.2293	.2277	.2289

MACH (1) = .200 ALPHA (3) = 10.830

X/LD	.050	.500	.950
X/LW			
.050	.4367	.4031	.4176
.500	.4114	.3800	.3990
.950	.4255	.4048	.4094

MACH (1) = .200 ALPHA (4) = 16.230

X/LD	.050	.500	.950
X/LW			
.050	.6309	.5392	.5751
.500	.5793	.5090	.4966
.950	.6020	.5466	.5532

MACH (1) = .200 ALPHA (5) = 19.440

X/LD	.050	.500	.950
X/LW			
.050	.7204	.6157	.6602
.500	.6462	.5708	.5898
.950	.6726	.5972	.6409

NAAL 737 OA143 ORB/B66-MAIN GEAR FRONT WALL CPS (RFCE10) (14 MAY 75)

REFERENCE DATA

SREF =	2690.0000 SQ.FT.	XMRP =	1076.7000 IN.XO		
LREF =	474.8000 IN.	YMRP =	.0000 IN.YO		
BREF =	936.6800 IN.	ZMRP =	375.0000 IN.ZO		
SCALE =	.0405				

PARAMETRIC DATA

BETA =	8.000	BDFLAP =	-11.700
ELEVON =	10.000	RUDDER =	.000
SPDBRK =	25.000	GRDPLN =	1.000
LNGRPS =	1.000	LNDGDR =	100.000

SECTION (1)MN GR FRT WAL CPS DEPENDENT VARIABLE CP

MACH (1) = .200 ALPHA (1) = .110

X/LD	.050	.500	.950
X/LW			
.050	.1103	.0730	.0902
.500	.0605	.0626	.0760
.950	.0860	.0730	.0743

MACH (1) = .200 ALPHA (2) = 5.430

X/LD	.050	.500	.950
X/LW			
.050	.3221	.2825	.3029
.500	.2837	.2603	.2829
.950	.2916	.2758	.2967

MACH (1) = .200 ALPHA (3) = 10.830

X/LD	.050	.500	.950
X/LW			
.050	.4811	.4115	.4527
.500	.4390	.3645	.3999
.950	.4694	.4373	.4394

MACH (1) = .200 ALPHA (4) = 16.230

X/LD	.050	.500	.950
X/LW			
.050	.6653	.5317	.5845
.500	.5701	.4715	.4864
.950	.6080	.5177	.5457

MACH (1) = .200 ALPHA (5) = 19.430

X/LD	.050	.500	.950
X/LW			
.050	.7233	.6069	.6542
.500	.6307	.5525	.5850
.950	.6768	.5785	.6513

NAAL 737 OA143 ORB/B66-MAIN GEAR FRONT WALL CPS (RFCE11) (14 MAY 75)

REFERENCE DATA

SREF =	2690.0000 SQ.FT.	XMRP =	1076.7000 IN.XO		
LREF =	474.8000 IN.	YMRP =	.0000 IN.YO		
BREF =	936.6800 IN.	ZMRP =	375.0000 IN.ZO		
SCALE =	.0405				

PARAMETRIC DATA

BETA =	.000	BDFLAP =	-11.700
ELEVON =	15.000	RUDDER =	.000
SPDBRK =	25.000	GRDPLN =	1.000
LNGRPS =	1.000	LNDGDR =	100.000

SECTION (1)MN GR FRT WAL CPS DEPENDENT VARIABLE CP

MACH (1) = .200 ALPHA (1) = .190

X/LD	.050	.500	.950
X/LW			
.050	.0241	.0287	.0354
.500	.0153	.0241	.0333
.950	.0476	.0430	.0513

MACH (1) = .200 ALPHA (2) = 5.560

X/LD	.050	.500	.950
X/LW			
.050	.3389	.2749	.2996
.500	.2640	.2732	.2879
.950	.3038	.2887	.2870

MACH (1) = .200 ALPHA (3) = 10.920

X/LD	.050	.500	.950
X/LW			
.050	.4702	.4244	.4349
.500	.3961	.4103	.4236
.950	.4249	.4261	.4294

MACH (1) = .200 ALPHA (4) = 16.300

X/LD	.050	.500	.950
X/LW			
.050	.5890	.5552	.5750
.500	.5622	.5354	.5539
.950	.5861	.5663	.5634

MACH (1) = .200 ALPHA (5) = 19.510

X/LD	.050	.500	.950
X/LW			
.050	.6791	.6161	.6411
.500	.6448	.5928	.5941
.950	.6722	.6300	.6358

NAAL 737 OA143 ORB/B66-MAIN GEAR FRONT WALL CPS (RFCE12) (14 MAY 75)

REFERENCE DATA

SREF =	2690.0000 SQ.FT.	XMRP =	1076.7000 IN.XO		
LREF =	474.8000 IN.	YMRP =	.0000 IN.YO		
BREF =	936.6800 IN.	ZMRP =	375.0000 IN.ZO		
SCALE =	.0405				

PARAMETRIC DATA

BETA =	-4.000	BDFLAP =	-11.700
ELEVON =	15.000	RUDDER =	.000
SPDBRK =	25.000	GRDPLN =	1.000
LNGRPS =	1.000	LNDGDR =	100.000

SECTION (1)MN GR FRT WAL CPS DEPENDENT VARIABLE CP

MACH (1) = .200 ALPHA (1) = .200

X/LD	.050	.500	.950
X/LW			
.050	-.0408	-.0391	-.0290
.500	-.0907	-.0680	-.0412
.950	.0065	-.0332	-.0290

MACH (1) = .200 ALPHA (2) = 5.570

X/LD	.050	.500	.950
X/LW			
.050	.2404	.2329	.2467
.500	.2350	.2321	.2463
.950	.2379	.2358	.2409

MACH (1) = .200 ALPHA (3) = 10.970

X/LD	.050	.500	.950
X/LW			
.050	.5155	.4507	.4665
.500	.4104	.4295	.4532
.950	.4719	.4598	.4631

MACH (1) = .200 ALPHA (4) = 16.300

X/LD	.050	.500	.950
X/LW			
.050	.6282	.5929	.6099
.500	.5730	.5793	.5958
.950	.5900	.5917	.5992

MACH (1) = .200 ALPHA (5) = 19.500

X/LD	.050	.500	.950
X/LW			
.050	.6898	.6671	.6766
.500	.6622	.6531	.6712
.950	.6815	.6630	.6717

NAAL 737 OA143 ORB/866-MAIN GEAR FRONT WALL CPS (RFCE13) (14 MAY 75)

REFERENCE DATA

SREF =	2690.0000 SQ.FT.	XMRP =	1076.7000 IN.XO		
LREF =	474.8000 IN.	YMRP =	.0000 IN.YO		
BREF =	936.6800 IN.	ZMRP =	375.0000 IN.ZO		
SCALE =	.0405				

PARAMETRIC DATA

BETA =	-8.000	BDFLAP =	-11.700
ELEVON =	15.000	RUDDER =	.000
SPDBRK =	25.000	GRDPLN =	1.000
LNGRPS =	1.000	LNDGDR =	100.000

SECTION (1)MN GR FRT WAL CPS DEPENDENT VARIABLE CP

MACH (1) = .200 ALPHA (1) = .210

X/LD	.050	.500	.950
X/LW			
.050	-.1335	-.1302	-.1076
.500	-.1804	-.1615	-.1272
.950	-.0875	-.1277	-.1113

MACH (1) = .200 ALPHA (2) = 5.590

X/LD	.050	.500	.950
X/LW			
.050	.1809	.1805	.1884
.500	.1751	.1768	.1876
.950	.2222	.2010	.2089

MACH (1) = .200 ALPHA (3) = 10.970

X/LD	.050	.500	.950
X/LW			
.050	.4783	.4331	.4667
.500	.4418	.4323	.4505
.950	.4530	.4389	.4443

MACH (1) = .200 ALPHA (4) = 16.340

X/LD	.050	.500	.950
X/LW			
.050	.6486	.5894	.6139
.500	.5558	.5803	.5952
.950	.5998	.5919	.5973

MACH (1) = .200 ALPHA (5) = 19.520

X/LD	.050	.500	.950
X/LW			
.050	.6988	.6683	.6840
.500	.6449	.6618	.6712
.950	.6618	.6655	.6720

NAAL 737 OA143 ORB/B66-MAIN GEAR FRONT WALL CPS (RFCE14) (14 MAY 75)

REFERENCE DATA

SREF =	2690.0000 SQ.FT.	XMRP =	1076.7000 IN.XO
LREF =	474.8000 IN.	YMRP =	.0000 IN.YO
BREF =	936.6800 IN.	ZMRP =	375.0000 IN.ZO
SCALE =	.0405		

PARAMETRIC DATA

BETA =	4.000	BDFLAP =	-11.700
ELEVON =	15.000	RUDDER =	.000
SPDBRK =	25.000	GRDPLN =	1.000
LNGRPS =	1.000	LNDGDR =	100.000

SECTION (1)MN GR FRT WAL CPS DEPENDENT VARIABLE CP

MACH (1) = .200 ALPHA (1) = .170

X/LD	.050	.500	.950
X/LW			
.050	.1249	.0873	.1187
.500	.0844	.0802	.1015
.950	.0986	.0881	.0906

MACH (1) = .200 ALPHA (2) = 5.550

X/LD	.050	.500	.950
X/LW			
.050	.2848	.2498	.2556
.500	.2335	.2385	.2448
.950	.2523	.2477	.2493

MACH (1) = .200 ALPHA (3) = 10.910

X/LD	.050	.500	.950
X/LW			
.050	.4566	.4258	.4400
.500	.4300	.4025	.4216
.950	.4445	.4275	.4312

MACH (1) = .200 ALPHA (4) = 16.300

X/LD	.050	.500	.950
X/LW			
.050	.6377	.5492	.5866
.500	.5846	.5187	.5104
.950	.6076	.5574	.5673

MACH (1) = .200 ALPHA (5) = 19.500

X/LD	.050	.500	.950
X/LW			
.050	.7298	.6237	.6687
.500	.6555	.5825	.6031
.950	.6873	.6105	.6576

NAAL 737 OA143 ORB/B66-MAIN GEAR FRONT WALL CPS (RFCE15) (14 MAY 75)

REFERENCE DATA

SREF =	2690.0000 SQ.FT.	XMRP =	1076.7000 IN.XO		
LREF =	474.8000 IN.	YMRP =	.0000 IN.YO		
BREF =	936.6800 IN.	ZMRP =	375.0000 IN.ZO		
SCALE =	.0405				

PARAMETRIC DATA

BETA =	8.000	BDFLAP =	-11.700
ELEVON =	15.000	RUDDER =	.000
SPDBRK =	25.000	GRDPLN =	1.000
LNGRPS =	1.000	LNDGDR =	100.000

SECTION (1)MN GR FRT WAL CPS DEPENDENT VARIABLE CP

MACH (1) = .200 ALPHA (1) = .200

X/LD	.050	.500	.950
X/LW			
.050	.1383	.0979	.1162
.500	.0870	.0912	.1024
.950	.1108	.0987	.0995

MACH (1) = .200 ALPHA (2) = 5.550

X/LD	.050	.500	.950
X/LW			
.050	.3428	.3031	.3256
.500	.3043	.2772	.3069
.950	.3169	.2989	.3194

MACH (1) = .200 ALPHA (3) = 10.930

X/LD	.050	.500	.950
X/LW			
.050	.5030	.4289	.4678
.500	.4620	.3838	.4061
.950	.4910	.4509	.4492

MACH (1) = .200 ALPHA (4) = 16.300

X/LD	.050	.500	.950
X/LW			
.050	.6745	.5439	.5976
.500	.5815	.4877	.5150
.950	.6129	.5290	.5617

MACH (1) = .200 ALPHA (5) = 19.510

X/LD	.050	.500	.950
X/LW			
.050	.7281	.6153	.6608
.500	.6428	.5636	.5878
.950	.6867	.5861	.6575

NAAL 737 OA143 ORB/B66-MAIN GEAR FRONT WALL CPS (RFCE16) (14 MAY 75)

REFERENCE DATA

SREF =	2690.0000 SQ.FT.	XMRP =	1076.7000 IN.XO		
LREF =	474.8000 IN.	YMRP =	.0000 IN.YO		
BREF =	936.6800 IN.	ZMRP =	375.0000 IN.ZO		
SCALE =	.0405				

PARAMETRIC DATA

BETA =	.000	BDFLAP =	-11.700
ELEVON =	15.000	RUDDER =	.000
SPDBRK =	25.000	GRDPLN =	.000
LNGRPS =	1.000	LNDGDR =	100.000

SECTION (1)MN GR FRT WAL CPS DEPENDENT VARIABLE CP

MACH (1) = .230 ALPHA (1) = .120

X/LD	.050	.500	.950
X/LW			
.050	-.0097	-.0040	.0088
.500	-.0384	-.0168	-.0023
.950	.0484	.0181	.0225

MACH (1) = .230 ALPHA (2) = 5.370

X/LD	.050	.500	.950
X/LW			
.050	.1686	.1508	.1787
.500	.1525	.1447	.1649
.950	.1558	.1501	.1548

MACH (1) = .230 ALPHA (3) = 10.620

X/LD	.050	.500	.950
X/LW			
.050	.3616	.2872	.3143
.500	.2711	.2808	.2976
.950	.3140	.2979	.2976

MACH (1) = .230 ALPHA (4) = 15.880

X/LD	.050	.500	.950
X/LW			
.050	.4340	.3652	.3885
.500	.3331	.3466	.3665
.950	.3709	.3689	.3777

MACH (1) = .230 ALPHA (5) = 19.030

X/LD	.050	.500	.950
X/LW			
.050	.4664	.4170	.4294
.500	.3848	.4006	.4173
.950	.4126	.4170	.4251

NAAL 737 OA143 ORB/B66-MAIN GEAR FRONT WALL CPS (RFCE17) (14 MAY 75)

REFERENCE DATA

SREF =	2690.0000 SQ.FT.	XMRP =	1076.7000 IN.XO		
LREF =	474.8000 IN.	YMRP =	.0000 IN.YO		
BREF =	936.6800 IN.	ZMRP =	375.0000 IN.ZO		
SCALE =	.0405				

PARAMETRIC DATA

BETA =	-4.000	BDFLAP =	-11.700
ELEVON =	15.000	RUDDER =	.000
SPDBRK =	25.000	GRDPLN =	.000
LNGRPS =	1.000	LNDGDR =	100.000

SECTION (1)MN GR FRT WAL CPS DEPENDENT VARIABLE CP

MACH (1) = .230 ALPHA (1) = .130

X/LD	.050	.500	.950
X/LW			
.050	-.0671	-.0603	-.0508
.500	-.1312	-.1010	-.0691
.950	-.0053	-.0484	-.0464

MACH (1) = .230 ALPHA (2) = 5.410

X/LD	.050	.500	.950
X/LW			
.050	.0949	.0922	.1013
.500	.0845	.0885	.1017
.950	.1189	.1081	.1226

MACH (1) = .230 ALPHA (3) = 10.640

X/LD	.050	.500	.950
X/LW			
.050	.2867	.2533	.2911
.500	.2543	.2435	.2712
.950	.2658	.2540	.2591

MACH (1) = .230 ALPHA (4) = 15.910

X/LD	.050	.500	.950
X/LW			
.050	.4512	.3816	.4009
.500	.3498	.3653	.3826
.950	.4042	.3921	.3870

MACH (1) = .230 ALPHA (5) = 19.060

X/LD	.050	.500	.950
X/LW			
.050	.4972	.4203	.4508
.500	.3870	.4055	.4243
.950	.4417	.4337	.4320

NAAL 737 OA143 ORB/B66-MAIN GEAR FRONT WALL CPS (RFCE18) (14 MAY 75)

REFERENCE DATA

SREF =	2690.0000 SQ.FT.	XMRP =	1076.7000 IN.XO
LREF =	474.8000 IN.	YMRP =	.0000 IN.YO
BREF =	936.6800 IN.	ZMRP =	375.0000 IN.ZO
SCALE =	.0405		

PARAMETRIC DATA

BETA =	-8.000	BDFLAP =	-11.700
ELEVON =	15.000	RUDDER =	.000
SPDBRK =	25.000	GRDPLN =	.000
LNGRPS =	1.000	LNDGDR =	100.000

SECTION (1)MN GR FRT WAL CPS DEPENDENT VARIABLE CP

MACH (1) = .230 ALPHA (1) = .140

X/LD	.050	.500	.950
X/LW			
.050	-.1349	-.1275	-.1149
.500	-.1556	-.1444	-.1149
.950	-.0525	-.0949	-.0786

MACH (1) = .230 ALPHA (2) = 5.420

X/LD	.050	.500	.950
X/LW			
.050	.0257	.0335	.0443
.500	.0112	.0240	.0385
.950	.0909	.0611	.0618

MACH (1) = .230 ALPHA (3) = 10.650

X/LD	.050	.500	.950
X/LW			
.050	.1985	.1999	.2083
.500	.1931	.1992	.2070
.950	.2117	.2151	.2235

MACH (1) = .230 ALPHA (4) = 15.920

X/LD	.050	.500	.950
X/LW			
.050	.3938	.3510	.3908
.500	.3550	.3449	.3722
.950	.3675	.3540	.3631

MACH (1) = .230 ALPHA (5) = 19.070

X/LD	.050	.500	.950
X/LW			
.050	.4855	.4252	.4555
.500	.4212	.4239	.4390
.950	.4421	.4296	.4340

NAAL 737 OA143 ORB/B66-MAIN GEAR FRONT WALL CPS (RFCE19) (14 MAY 75)

REFERENCE DATA

SREF =	2690.0000 SQ.FT.	XMRP =	1076.7000 IN.XO
LREF =	474.8000 IN.	YMRP =	.0000 IN.YO
BREF =	936.6800 IN.	ZMRP =	375.0000 IN.ZO
SCALE =	.0405		

PARAMETRIC DATA

BETA =	4.000	BDFLAP =	-11.700
ELEVON =	15.000	RUDDER =	.000
SPDBRK =	25.000	GRDPLN =	.000
LNGRPS =	1.000	LNDGDR =	100.000

SECTION (1)MN GR FRT WAL CPS DEPENDENT VARIABLE CP

MACH (1) = .230 ALPHA (1) = .150

X/LD	.050	.500	.950
X/LW			
.050	.0524	.0565	.0632
.500	.0598	.0592	.0659
.950	.0609	.0626	.0649

MACH (1) = .230 ALPHA (2) = 5.360

X/LD	.050	.500	.950
X/LW			
.050	.2233	.1775	.2034
.500	.1694	.1728	.1896
.950	.1920	.1802	.1819

MACH (1) = .230 ALPHA (3) = 10.620

X/LD	.050	.500	.950
X/LW			
.050	.3009	.2608	.2706
.500	.2402	.2483	.2591
.950	.2594	.2615	.2638

MACH (1) = .230 ALPHA (4) = 15.860

X/LD	.050	.500	.950
X/LW			
.050	.4074	.3661	.3775
.500	.3479	.3536	.3641
.950	.3671	.3654	.3701

MACH (1) = .230 ALPHA (5) = 19.040

X/LD	.050	.500	.950
X/LW			
.050	.4585	.4249	.4400
.500	.4229	.3998	.4236
.950	.4290	.4122	.4303

NAAL 737 OA143 ORB/B66-MAIN GEAR FRONT WALL CPS (RFCE20) (14 MAY 75)

REFERENCE DATA

SREF =	2690.0000 SQ.FT.	XMRP =	1076.7000 IN.XO		
LREF =	474.8000 IN.	YMRP =	.0000 IN.YO		
BREF =	936.6800 IN.	ZMRP =	375.0000 IN.ZO		
SCALE =	.0405				

PARAMETRIC DATA

BETA =	8.000	BDFLAP =	-11.700
ELEVON =	15.000	RUDDER =	.000
SPDBRK =	25.000	GRDPLN =	.090
LNGRPS =	1.000	LNDGDR =	100.000

SECTION (1)MN GR FRT WAL CPS DEPENDENT VARIABLE CP

MACH (1) = .230 ALPHA (1) = .130

X/LD	.050	.500	.950
X/LW			
.050	.1031	.0765	.1065
.500	.0762	.0725	.0924
.950	.0866	.0775	.0826

MACH (1) = .230 ALPHA (2) = 5.350

X/LD	.050	.500	.950
X/LW			
.050	.2275	.1846	.2069
.500	.1623	.1752	.1880
.950	.1894	.1880	.1931

MACH (1) = .230 ALPHA (3) = 10.610

X/LD	.050	.500	.950
X/LW			
.050	.3492	.3025	.3254
.500	.2794	.2834	.3049
.950	.3002	.2998	.3116

MACH (1) = .230 ALPHA (4) = 15.840

X/LD	.050	.500	.950
X/LW			
.050	.4226	.3825	.4078
.500	.3838	.3343	.3808
.950	.3970	.3798	.3970

MACH (1) = .230 ALPHA (5) = 19.010

X/LD	.050	.500	.950
X/LW			
.050	.4870	.4179	.4530
.500	.4385	.3725	.4082
.950	.4729	.4355	.4368

NAAL 737 OA143 ORB/B66-MAIN GEAR FRONT WALL CPS (RFCE21) (14 MAY 75)

REFERENCE DATA

SREF =	2690.0000 SQ.FT.	XMRP =	1076.7000 IN.XO		
LREF =	474.8000 IN.	YMRP =	.0000 IN.YO		
BREF =	936.6800 IN.	ZMRP =	375.0000 IN.ZO		
SCALE =	.0405				

PARAMETRIC DATA

BETA =	.000	BDFLAP =	-11.700
ELEVON =	10.000	RUDDER =	.000
SPDBRK =	25.000	GRDPLN =	.000
LNGRPS =	1.000	LNDGDR =	100.000

SECTION (1)MN GR FRT WAL CPS DEPENDENT VARIABLE CP

MACH (1) = .230 ALPHA (1) = .080

X/LD	.050	.500	.950
X/LW			
.050	-.0212	-.0117	-.0063
.500	-.0442	-.0360	-.0168
.950	.0335	.0017	.0065

MACH (1) = .230 ALPHA (2) = 5.340

X/LD	.050	.500	.950
X/LW			
.050	.1513	.1347	.1584
.500	.1381	.1310	.1500
.950	.1412	.1347	.1402

MACH (1) = .230 ALPHA (3) = 10.550

X/LD	.050	.500	.950
X/LW			
.050	.3421	.2716	.3018
.500	.2622	.2719	.2830
.950	.2978	.2790	.2796

MACH (1) = .230 ALPHA (4) = 15.810

X/LD	.050	.500	.950
X/LW			
.050	.4287	.3590	.3813
.500	.3251	.3373	.3529
.950	.3634	.3596	.3637

MACH (1) = .230 ALPHA (5) = 18.980

X/LD	.050	.500	.950
X/LW			
.050	.4623	.4101	.4252
.500	.3831	.3949	.4044
.950	.4081	.4124	.4131

NAAL 737 OA143 ORB/866-MAIN GEAR FRONT WALL CPS (RFCE22) (14 MAY 75)

REFERENCE DATA

SREF =	2690.0000 SQ.FT.	XMRP =	1076.7000 IN.XO		
LREF =	474.8000 IN.	YMRP =	.0000 IN.YO		
BREF =	936.6800 IN.	ZMRP =	375.0000 IN.ZO		
SCALE =	.0405				

PARAMETRIC DATA

BETA =	-4.000	BDFLAP =	-11.700
ELEVON =	10.000	RUDDER =	.000
SPDBRK =	25.000	GRDPLN =	.000
LNGRPS =	1.000	LNDGDR =	100.000

SECTION (1)MN GR FRT WAL CPS DEPENDENT VARIABLE CP

MACH (1) = .230 ALPHA (1) = .090

X/LD	.050	.500	.950
X/LW			
.050	-.0797	-.0770	-.0648
.500	-.1388	-.1184	-.0834
.950	-.0267	-.0641	-.0614

MACH (1) = .230 ALPHA (2) = 5.300

X/LD	.050	.500	.950
X/LW			
.050	.0743	.0756	.0851
.500	.0688	.0729	.0844
.950	.1136	.0943	.1058

MACH (1) = .230 ALPHA (3) = 10.570

X/LD	.050	.500	.950
X/LW			
.050	.2674	.2372	.2721
.500	.2379	.2281	.2529
.950	.2476	.2352	.2432

MACH (1) = .230 ALPHA (4) = 15.810

X/LD	.050	.500	.950
X/LW			
.050	.4362	.3629	.3898
.500	.3485	.3461	.3727
.950	.3942	.3737	.3720

MACH (1) = .230 ALPHA (5) = 18.980

X/LD	.050	.500	.950
X/LW			
.050	.4[illegible]45	.4109	.4428
.500	.3820	.3958	.4180
.950	.4274	.4224	.4264

NAAL 737 OA143 ORB/B66-MAIN GEAR FRONT WALL CPS (RFCE23) (14 MAY 75)

REFERENCE DATA

SREF =	2690.0000 SQ.FT.	XMRP =	1076.7000 IN.XO		
LREF =	474.8000 IN.	YMRP =	.0000 IN.YO		
BREF =	936.6800 IN.	ZMRP =	375.0000 IN.ZO		
SCALE =	.0405				

PARAMETRIC DATA

BETA =	-8.000	BDFLAP =	-11.700
ELEVON =	10.000	RUDDER =	.000
SPDBRK =	25.000	GRDPLN =	.000
LNGRPS =	1.000	LNDGDR =	100.000

SECTION (1)MN GR FRT WAL CPS DEPENDENT VARIABLE CP

MACH (1) = .230 ALPHA (1) = .100

X/LD	.050	.500	.950
X/LW			
.050	-.1504	-.1470	-.1331
.500	-.1766	-.1606	-.1300
.950	-.0665	-.1090	-.0923

MACH (1) = .230 ALPHA (2) = 5.320

X/LD	.050	.500	.950
X/LW			
.050	.0102	.0150	.0292
.500	-.0165	-.0036	.0170
.950	.0757	.0428	.0479

MACH (1) = .230 ALPHA (3) = 10.590

X/LD	.050	.500	.950
X/LW			
.050	.1834	.1824	.1912
.500	.1797	.1794	.1942
.950	.2026	.1989	.2097

MACH (1) = .230 ALPHA (4) = 15.850

X/LD	.050	.500	.950
X/LW			
.050	.3755	.3351	.3755
.500	.3395	.3297	.3583
.950	.3523	.3392	.3496

MACH (1) = .230 ALPHA (5) = 19.010

X/LD	.050	.500	.950
X/LW			
.050	.4725	.4107	.4426
.500	.4117	.4107	.4275
.950	.4319	.4181	.4228

NAAL 737 OA143 ORB/B66-MAIN GEAR FRONT WALL CPS (RFCE24) (14 MAY 75)

REFERENCE DATA

SREF =	2690.0000 SQ.FT.	XMRP =	1076.7000 IN.XO		
LREF =	474.8000 IN.	YMRP =	.0000 IN.YO		
BREF =	936.6800 IN.	ZMRP =	375.0000 IN.ZO		
SCALE =	.0405				

PARAMETRIC DATA

BETA =	4.000	BDFLAP =	-11.700
ELEVON =	10.000	RUDDER =	.000
SPDBRK =	25.000	GRDPLN =	.000
LNGRPS =	1.000	LNDGDR =	100.000

SECTION (1)MN GR FRT WAL CPS DEPENDENT VARIABLE CP

MACH (1) = .230 ALPHA (1) = .070

X/LD	.050	.500	.950
X/LW			
.050	.0404	.0431	.0478
.500	.0421	.0462	.0519
.950	.0475	.0482	.0522

MACH (1) = .230 ALPHA (2) = 5.290

X/LD	.050	.500	.950
X/LW			
.050	.2100	.1685	.1951
.500	.1590	.1600	.1786
.950	.1803	.1678	.1709

MACH (1) = .230 ALPHA (3) = 10.530

X/LD	.050	.500	.950
X/LW			
.050	.2860	.2460	.2594
.500	.2252	.2339	.2426
.950	.2450	.2463	.2490

MACH (1) = .230 ALPHA (4) = 15.790

X/LD	.050	.500	.950
X/LW			
.050	.3947	.3517	.3631
.500	.3345	.3395	.3544
.950	.3540	.3530	.3591

MACH (1) = .230 ALPHA (5) = 18.950

X/LD	.050	.500	.950
X/LW			
.050	.4415	.4071	.4241
.500	.4084	.3960	.4128
.950	.4215	.4027	.4168

NAAL 737 OA143 ORB/B66-MAIN GEAR FRONT WALL CPS (RFCE25) (14 MAY 75)

REFERENCE DATA

SREF =	2690.0000 SQ.FT.	XMRP =	1076.7000 IN.XO		
LREF =	474.8000 IN.	YMRP =	.0000 IN.YO		
BREF =	936.6800 IN.	ZMRP =	375.0000 IN.ZO		
SCALE =	.0405				

PARAMETRIC DATA

BETA =	8.000	BDFLAP =	-11.700
ELEVON =	10.000	RUDDER =	.000
SPDBRK =	25.000	GRDPLN =	.000
LNGRPS =	1.000	LNDGDR =	100.000

SECTION (1)MN GR FRT WAL CPS DEPENDENT VARIABLE CP

MACH (1) = .230 ALPHA (1) = .100

X/LD	.050	.500	.950
X/LW			
.050	.0972	.0664	.0972
.500	.0670	.0593	.0819
.950	.0735	.0626	.0691

MACH (1) = .230 ALPHA (2) = 5.310

X/LD	.050	.500	.950
X/LW			
.050	.2169	.1763	.1932
.500	.1576	.1624	.1753
.950	.1793	.1793	.1810

MACH (1) = .230 ALPHA (3) = 10.550

X/LD	.050	.500	.950
X/LW			
.050	.3374	.2904	.3154
.500	.2617	.2722	.2935
.950	.2901	.2888	.3012

MACH (1) = .230 ALPHA (4) = 15.830

X/LD	.050	.500	.950
X/LW			
.050	.4092	.3681	.3924
.500	.3738	.3341	.3715
.950	.3856	.3651	.3836

MACH (1) = .230 ALPHA (5) = 18.970

X/LD	.050	.500	.950
X/LW			
.050	.4685	.3989	.4406
.500	.4201	.3572	.3972
.950	.4514	.4151	.4221

NAAL 737 OA143 ORB/B66-MAIN GEAR FRONT WALL CPS (RFCE26) (14 MAY 75)

REFERENCE DATA

SREF =	2690.0000 SQ.FT.	XMRP =	1076.7000 IN.XO		
LREF =	474.8000 IN.	YMRP =	.0000 IN.YO		
BREF =	936.6800 IN.	ZMRP =	375.0000 IN.ZO		
SCALE =	.0405				

PARAMETRIC DATA

BETA =	8.000	BDFLAP =	-11.700
ELEVON =	10.000	RUDDER =	.000
SPDBRK =	25.000	GRDPLN =	.000
LNGRPS =	.000	LNDGDR =	.000

SECTION (1)MN OR FRT WAL CPS DEPENDENT VARIABLE CP

MACH (1) = .230 ALPHA (1) = .070

X/LD	.050	.500	.950
X/LW			
.050	-.0929	-.0898	-.0888
.500	-.0902	-.0881	-.0898
.950	-.0878	-.0857	-.0878

MACH (1) = .230 ALPHA (2) = 5.330

X/LD	.050	.500	.950
X/LW			
.050	-.0202	-.0185	-.0223
.500	-.0202	-.0199	-.0195
.950	-.0172	-.0172	-.0141

MACH (1) = .230 ALPHA (3) = 10.570

X/LD	.050	.500	.950
X/LW			
.050	.0573	.0556	.0539
.500	.0546	.0556	.0559
.950	.0546	.0566	.0590

MACH (1) = .230 ALPHA (4) = 15.850

X/LD	.050	.500	.950
X/LW			
.050	.1362	.1318	.1325
.500	.1366	.1345	.1335
.950	.1376	.1345	.1345

MACH (1) = .230 ALPHA (5) = 19.010

X/LD	.050	.500	.950
X/LW			
.050	.1827	.1817	.1814
.500	.1820	.1827	.1834
.950	.1807	.1817	.1844

NAAL 737 OA143 ORB/B66-MAIN GEAR FRONT WALL CPS (RFCE27) (14 MAY 75)

REFERENCE DATA

SREF =	2690.0000 SQ.FT.	XMRP =	1076.7000 IN.XO		
LREF =	474.8000 IN.	YMRP =	.0000 IN.YO		
BREF =	936.8800 IN.	ZMRP =	375.0000 IN.ZO		
SCALE =	.0409				

PARAMETRIC DATA

BETA =	8.000	BDFLAP =	-11.700
ELEVON =	10.000	RUDDER =	.000
SPDBRK =	25.000	ORDPLN =	.000
LNORPS =	.000	LNDGDR =	40.000

SECTION (1)MN GR FRT WAL CPS DEPENDENT VARIABLE CP

MACH (1) = .230 ALPHA (1) = .080

X/LD	.050	.500	.950
X/LW			
.050	-.0452	-.0530	-.0527
.500	-.0503	-.0537	-.0412
.950	-.0158	-.0385	-.0547

MACH (1) = .230 ALPHA (2) = 5.320

X/LD	.050	.500	.950
X/LW			
.050	.1059	.0689	.0893
.500	.0747	.0679	.0910
.950	.0893	.0733	.0991

MACH (1) = .230 ALPHA (3) = 10.550

X/LD	.050	.500	.950
X/LW			
.050	.2471	.1992	.1972
.500	.1759	.1823	.1870
.950	.2090	.2019	.2151

MACH (1) = .230 ALPHA (4) = 15.820

X/LD	.050	.500	.950
X/LW			
.050	.3302	.2959	.3023
.500	.2777	.2834	.2865
.950	.2999	.2969	.3134

MACH (1) = .230 ALPHA (5) = 18.970

X/LD	.050	.500	.950
X/LW			
.050	.3800	.3499	.3572
.500	.3334	.3361	.3418
.950	.3505	.3485	.3623

NAAL 737 OA143 ORB/B66-MAIN GEAR FRONT WALL CPS (RFCE29) (14 MAY 75)

REFERENCE DATA

SREF =	2690.0000 SQ.FT.	XMRP =	1076.7000 IN.XO		
LREF =	474.8000 IN.	YMRP =	.0000 IN.YO		
BREF =	936.6800 IN.	ZMRP =	375.0000 IN.ZO		
SCALE =	.0405				

PARAMETRIC DATA

BETA =	8.000	BDFLAP =	-11.700
ELEVON =	10.000	RUDDER =	.000
SPDBRK =	25.000	GRDPLN =	.000
LNGRPS =	.000	LNDGDR =	80.000

SECTION (1)MN GR FRT WAL CPS DEPENDENT VARIABLE CP

MACH (1) = .230 ALPHA (1) = .090

X/LD	.050	.500	.950
X/LW			
.050	.0149	-.0283	.0048
.500	.0197	-.0154	-.0049
.950	.0237	-.0093	-.0046

MACH (1) = .230 ALPHA (2) = 5.330

X/LD	.050	.500	.950
X/LW			
.050	.1464	.1072	.1180
.500	.0923	.1005	.1032
.950	.1133	.1133	.1120

MACH (1) = .230 ALPHA (3) = 10.560

X/LD	.050	.500	.950
X/LW			
.050	.2702	.2365	.2402
.500	.2128	.2216	.2213
.950	.2415	.2382	.2284

MACH (1) = .230 ALPHA (4) = 15.810

X/LD	.050	.500	.950
X/LW			
.050	.3676	.3222	.3299
.500	.3033	.3124	.3128
.950	.3235	.3171	.3141

MACH (1) = .230 ALPHA (5) = 18.970

X/LD	.050	.500	.950
X/LW			
.050	.4127	.3754	.3785
.500	.3727	.3640	.3687
.950	.3785	.3674	.3697

NAAL 737 OA143 ORB/B66-MAIN GEAR FRONT WALL CPS (RFCE30) (14 MAY 75)

REFERENCE DATA

SREF =	2690.0000 SQ.FT.	XMRP =	1076.7000 IN.XO		
LREF =	474.8000 IN.	YMRP =	.0000 IN.YO		
BREF =	936.6800 IN.	ZMRP =	375.0000 IN.ZO		
SCALE =	.0405				

PARAMETRIC DATA

BETA =	.000	BDFLAP =	-11.700
ELEVON =	5.000	RUDDER =	.000
SPDBRK =	25.000	GRDPLN =	.000
LNGRPS =	1.000	LNDGDR =	100.000

SECTION (1)MN GR FRT WAL CPS DEPENDENT VARIABLE CP

MACH (1) = .230 ALPHA (1) = .010

X/LD	.050	.500	.950
X/LW			
.050	-.0405	-.0300	-.0256
.500	-.0757	-.0524	-.0354
.950	.0160	-.0144	-.0168

MACH (1) = .230 ALPHA (2) = 5.240

X/LD	.050	.500	.950
X/LW			
.050	.1258	.1204	.1393
.500	.1164	.1160	.1343
.950	.1198	.1174	.1225

MACH (1) = .230 ALPHA (3) = 10.470

X/LD	.050	.500	.950
X/LW			
.050	.3230	.2560	.2897
.500	.2459	.2567	.2718
.950	.2822	.2647	.2688

MACH (1) = .230 ALPHA (4) = 15.730

X/LD	.050	.500	.950
X/LW			
.050	.4164	.3471	.3718
.500	.3045	.3271	.3400
.950	.3579	.3552	.3562

MACH (1) = .230 ALPHA (5) = 18.890

X/LD	.050	.500	.950
X/LW			
.050	.4474	.4007	.4075
.500	.3639	.3801	.3930
.950	.3963	.3974	.4024

NAAL 737 OA143 ORB/B66-MAIN GEAR FRONT WALL CPS (RFCE31) (14 MAY 75)

REFERENCE DATA

SREF =	2690.0000 SQ.FT.	XMRP =	1076.7000 IN.XO		
LREF =	474.8000 IN.	YMRP =	.0000 IN.YO		
BREF =	936.6800 IN.	ZMRP =	375.0000 IN.ZO		
SCALE =	.0405				

PARAMETRIC DATA

BETA =	-4.000	BDFLAP =	-11.700
ELEVON =	5.000	RUDDER =	.000
SPDBRK =	25.000	GRDPLN =	.000
LNGRPS =	1.000	LNDGDR =	100.000

SECTION (1)MN GR FRT WAL CPS DEPENDENT VARIABLE CP

MACH (1) = .230 ALPHA (1) = .000

X/LD	.050	.500	.950
X/LW			
.050	-.1001	-.0961	-.0859
.500	-.1709	-.1374	-.1005
.950	-.0327	-.0910	-.0768

MACH (1) = .230 ALPHA (2) = 5.250

X/LD	.050	.500	.950
X/LW			
.050	.0599	.0606	.0657
.500	.0474	.0515	.0677
.950	.0958	.0786	.0894

MACH (1) = .230 ALPHA (3) = 10.480

X/LD	.050	.500	.950
X/LW			
.050	.2478	.2201	.2566
.500	.2232	.2124	.2367
.950	.2293	.2188	.2255

MACH (1) = .230 ALPHA (4) = 15.780

X/LD	.050	.500	.950
X/LW			
.050	.4238	.3520	.3810
.500	.3372	.3460	.3621
.950	.3780	.3608	.3604

MACH (1) = .230 ALPHA (5) = 18.910

X/LD	.050	.500	.950
X/LW			
.050	.4719	.4006	.4329
.500	.3606	.3838	.3976
.950	.4164	.4131	.4174

NAAL 737 OA143 ORB/B66-MAIN GEAR FRONT WALL CPS (RFCE32) (14 MAY 75)

REFERENCE DATA

SREF =	2690.0000 SQ.FT.	XMRP =	1076.7000 IN.XO
LREF =	474.8000 IN.	YMRP =	.0000 IN.YO
BREF =	936.6800 IN.	ZMRP =	375.0000 IN.ZO
SCALE =	.0405		

PARAMETRIC DATA

BETA =	-8.000	BDFLAP =	-11.700
ELEVON =	5.000	RUDDER =	.000
SPDBRK =	25.000	GRDPLN =	.000
LNGRPS =	1.000	LNDGDR =	100.000

SECTION (1)MN GR FRT WAL CPS DEPENDENT VARIABLE CP

MACH (1) = .230 ALPHA (1) = .050

X/LD	.050	.500	.950
X/LW			
.050	-.1736	-.1706	-.1557
.500	-.1932	-.1831	-.1560
.950	-.0916	-.1269	-.1170

MACH (1) = .230 ALPHA (2) = 5.250

X/LD	.050	.500	.950
X/LW			
.050	-.0111	-.0016	.0072
.500	-.0389	-.0317	-.0026
.950	.0570	.0143	.0234

MACH (1) = .230 ALPHA (3) = 10.520

X/LD	.050	.500	.950
X/LW			
.050	.1621	.1611	.1689
.500	.1591	.1594	.1743
.950	.1800	.1766	.1867

MACH (1) = .230 ALPHA (4) = 15.790

X/LD	.050	.500	.950
X/LW			
.050	.3584	.3246	.3659
.500	.3236	.3185	.3425
.950	.3371	.3263	.3334

MACH (1) = .230 ALPHA (5) = 18.960

X/LD	.050	.500	.950
X/LW			
.050	.4540	.3970	.4345
.500	.3996	.3966	.4141
.950	.4164	.4043	.4080

NAAL 737 OA143 ORB/B66-MAIN GEAR FRONT WALL CPS (RFCE33) (14 MAY 75)

REFERENCE DATA

SREF =	2890.0000 SQ.FT.	XMRP =	1078.7000 IN.XO		
LREF =	474.8000 IN.	YMRP =	.0000 IN.YO		
BREF =	936.6800 IN.	ZMRP =	375.0000 IN.ZO		
SCALE =	.0405				

PARAMETRIC DATA

BETA =	4.000	BDFLAP =	-11.700
ELEVON =	5.000	RUDDER =	.000
SPDBRK =	25.000	GRDPLN =	.000
LNGRPS =	1.000	LNDGDR =	100.000

SECTION (1)MN GR FRT WAL CPS DEPENDENT VARIABLE CP

MACH (1) = .230 ALPHA (1) = .010

X/LD	.050	.500	.950
X/LW			
.050	.0249	.0269	.0320
.500	.0273	.0283	.0364
.950	.0320	.0351	.0405

MACH (1) = .230 ALPHA (2) = 5.230

X/LD	.050	.500	.950
X/LW			
.050	.1957	.1535	.1829
.500	.1508	.1454	.1657
.950	.1653	.1542	.1579

MACH (1) = .230 ALPHA (3) = 10.470

X/LD	.050	.500	.950
X/LW			
.050	.2748	.2338	.2449
.500	.2125	.2169	.2236
.950	.2311	.2327	.2341

MACH (1) = .230 ALPHA (4) = 15.750

X/LD	.050	.500	.950
X/LW			
.050	.3828	.3437	.3542
.500	.3209	.3279	.3357
.950	.3434	.3427	.3444

MACH (1) = .230 ALPHA (5) = 18.910

X/LD	.050	.500	.950
X/LW			
.050	.4331	.4015	.4203
.500	.3978	.3867	.3971
.950	.4092	.3985	.4062

NAAL 737 OA143 ORB/866-MAIN GEAR FRONT WALL CPS (RFCE34) (14 MAY 75)

REFERENCE DATA

SREF =	2690.0000 SQ.FT.	XMRP =	1076.7000 IN.XO
LREF =	474.8000 IN.	YMRP =	.0000 IN.YO
BREF =	936.6800 IN.	ZMRP =	375.0000 IN.ZO
SCALE =	.0405		

PARAMETRIC DATA

BETA =	8.000	BDFLAP =	-11.700
ELEVON =	5.000	RUDDER =	.000
SPDBRK =	25.000	GRDPLN =	.000
LNGRPS =	1.000	LNDGDR =	100.000

SECTION (1)MN GR FRT WAL CPS DEPENDENT VARIABLE CP

MACH (1) = .230 ALPHA (1) = -4.170

X/LD	.050	.500	.950
X/LW			
.050	-.0239	-.0222	-.0185
.500	-.0191	-.0202	-.0137
.950	-.0185	-.0178	-.0124

MACH (1) = .230 ALPHA (2) = -2.060

X/LD	.050	.500	.950
X/LW			
.050	.0299	.0156	.0404
.500	.0190	.0129	.0302
.950	.0217	.0173	.0214

MACH (1) = .230 ALPHA (3) = .020

X/LD	.050	.500	.950
X/LW			
.050	.0809	.0518	.0836
.500	.0545	.0488	.0701
.950	.0626	.0538	.0596

MACH (1) = .230 ALPHA (4) = 2.090

X/LD	.050	.500	.950
X/LW			
.050	.1339	.0963	.1244
.500	.0915	.0902	.1068
.950	.1088	.0959	.1007

MACH (1) = .230 ALPHA (5) = 4.170

X/LD	.050	.500	.950
X/LW			
.050	.1793	.1420	.1512
.500	.1190	.1268	.1366
.950	.1549	.1451	.1457

MACH (1) = .230 ALPHA (6) = 6.270

X/LD	.050	.500	.950
X/LW			
.050	.2353	.1933	.2126
.500	.1672	.1794	.1889
.950	.1940	.1997	.2014

MACH (1) = .230 ALPHA (7) = 8.370

X/LD	.050	.500	.950
X/LW			
.050	.2890	.2439	.2698
.500	.2099	.2254	.2375
.950	.2429	.2456	.2557

NAAL 737 OA143 ORB/B66-MAIN GEAR FRONT WALL CPS (RFCE34)

SECTION (1)MN GR FRT WAL CPS DEPENDENT VARIABLE CP

MACH (1) = .230 ALPHA (8) = 10.470

X/LD	.050	.500	.950
X/LW			
.050	.3292	.2823	.3063
.500	.2506	.2594	.2780
.950	.2800	.2800	.2965

MACH (1) = .230 ALPHA (9) = 12.570

X/LD	.050	.500	.950
X/LW			
.050	.3564	.3160	.3402
.500	.2928	.2962	.3096
.950	.3143	.3096	.3254

MACH (1) = .230 ALPHA (10) = 14.650

X/LD	.050	.500	.950
X/LW			
.050	.3874	.3447	.3689
.500	.3383	.3239	.3420
.950	.3518	.3420	.3575

MACH (1) = .230 ALPHA (11) = 16.770

X/LD	.050	.500	.950
X/LW			
.050	.4177	.3726	.3989
.500	.3763	.3308	.3648
.950	.4012	.3719	.3904

MACH (1) = .230 ALPHA (12) = 18.880

X/LD	.050	.500	.950
X/LW			
.050	.4546	.3925	.4308
.500	.4066	.3492	.3828
.950	.4459	.4076	.4137

NAAL 737 OA143 ORB/565-MAIN GEAR FRONT WALL CPS (RFCE35) (14 MAY 75)

REFERENCE DATA

SREF =	2690.0000 SQ.FT.	XMRP =	1076.7000 IN.XO
LREF =	474.8000 IN.	YMRP =	.0000 IN.YO
BREF =	936.6800 IN.	ZMRP =	375.0000 IN.ZO
SCALE =	.0405		

PARAMETRIC DATA

BETA =	.000	BDFLAP =	-11.700
ELEVON =	5.000	RUDDER =	.000
SPDBRK =	25.000	GRDPLN =	.000
LNGRPS =	1.000	LNDGDR =	100.000

SECTION (1)MN GR FRT WAL CPS DEPENDENT VARIABLE CP

MACH (1) = .230 ALPHA (1) = .030

X/LD	.050	.500	.950
X/LW			
.050	-.0382	-.0297	-.0260
.500	-.0717	-.0561	-.0351
.950	.0156	-.0209	-.0172

MACH (1) = .230 ALPHA (2) = 5.230

X/LD	.050	.500	.950
X/LW			
.050	.1246	.1175	.1334
.500	.1182	.1132	.1321
.950	.1199	.1186	.1236

MACH (1) = .230 ALPHA (3) = 10.470

X/LD	.050	.500	.950
X/LW			
.050	.3233	.2566	.2892
.500	.2508	.2569	.2680
.950	.2812	.2660	.2667

MACH (1) = .230 ALPHA (4) = 15.750

X/LD	.050	.500	.950
X/LW			
.050	.4146	.3442	.3708
.500	.3058	.3250	.3381
.950	.3560	.3472	.3523

MACH (1) = .230 ALPHA (5) = 18.910

X/LD	.050	.500	.950
X/LW			
.050	.4486	.3983	.4111
.500	.3655	.3777	.3909
.950	.3976	.3953	.4010

NAAL 737 OA143 OR8/B65-MAIN GEAR FRONT WALL CPS (RFCE36) (14 MAY 75)

REFERENCE DATA

SREF =	2690.0000 SQ.FT.	XMRP =	1076.7000 IN.XO
LREF =	474.8000 IN.	YMRP =	.0000 IN.YO
BREF =	936.6800 IN.	ZMRP =	375.0000 IN.ZO
SCALE =	.0405		

PARAMETRIC DATA

BETA =	-4.000	BDFLAP =	-11.700
ELEVON =	5.000	RUDDER =	.000
SPDBRK =	25.000	GRDPLN =	.000
LNGRPS =	1.000	LNDGDR =	100.000

SECTION (1)MN GR FRT WAL CPS DEPENDENT VARIABLE CP

MACH (1) = .230 ALPHA (1) = .000

X/LD	.050	.500	.950
X/LW			
.050	-.1009	-.0976	-.0853
.500	-.1688	-.1369	-.1037
.950	-.0372	-.0853	-.0857

MACH (1) = .230 ALPHA (2) = 5.260

X/LD	.050	.500	.950
X/LW			
.050	.0557	.0615	.0665
.500	.0475	.0516	.0679
.950	.1005	.0805	.0883

MACH (1) = .230 ALPHA (3) = 10.490

X/LD	.050	.500	.950
X/LW			
.050	.2468	.2192	.2518
.500	.2222	.2111	.2360
.950	.2276	.2185	.2259

MACH (1) = .230 ALPHA (4) = 15.770

X/LD	.050	.500	.950
X/LW			
.050	.4173	.3512	.3770
.500	.3330	.3438	.3606
.950	.3743	.3549	.3582

MACH (1) = .230 ALPHA (5) = 18.920

X/LD	.050	.500	.950
X/LW			
.050	.4724	.3979	.4281
.500	.3647	.3805	.3935
.950	.4160	.4076	.4117

NAAL 737 OA143 ORB/B65-MAIN GEAR FRONT WALL CPS (RFCE37) (14 MAY 75)

REFERENCE DATA

SREF =	2690.0000 SQ.FT.	XMRP =	1076.7000 IN.XO		
LREF =	474.8000 IN.	YMRP =	.0000 IN.YO		
BREF =	936.6800 IN.	ZMRP =	375.0000 IN.ZO		
SCALE =	.0405				

PARAMETRIC DATA

BETA =	-8.000	BDFLAP =	-11.700
ELEVON =	5.000	RUDDER =	.000
SPDBRK =	25.000	GRDPLN =	.000
LNGRPS =	1.000	LNDGDR =	100.000

SECTION (1)MN GR FRT WAL CPS DEPENDENT VARIABLE CP

MACH (1) = .230 ALPHA (1) = .030

X/LD	.050	.500	.950
X/LW			
.050	-.1737	-.1689	-.1503
.500	-.1926	-.1815	-.1547
.950	-.0910	-.1289	-.1157

MACH (1) = .230 ALPHA (2) = 5.250

X/LD	.050	.500	.950
X/LW			
.050	-.0138	-.0063	.0068
.500	-.0310	-.0192	-.0029
.950	.0576	.0038	.0187

MACH (1) = .230 ALPHA (3) = 10.510

X/LD	.050	.500	.950
X/LW			
.050	.1637	.1607	.1698
.500	.1600	.1640	.1708
.950	.1833	.1786	.1884

MACH (1) = .230 ALPHA (4) = 15.790

X/LD	.050	.500	.950
X/LW			
.050	.3580	.3209	.3623
.500	.3253	.3155	.3391
.950	.3368	.3236	.3314

MACH (1) = .230 ALPHA (5) = 18.950

X/LD	.050	.500	.950
X/LW			
.050	.4573	.3944	.4338
.500	.3985	.3975	.4153
.950	.4156	.4042	.4082

NAAL 737 OA143 ORB/B65-MAIN GEAR FRONT WALL CPS (RFCE38) (14 MAY 75)

REFERENCE DATA

SREF =	2690.0000 SQ.FT.	XMRP =	1076.7000 IN.XO		
LREF =	474.8000 IN.	YMRP =	.0000 IN.YO		
BREF =	936.6800 IN.	ZMRP =	375.0000 IN.ZO		
SCALE =	.0405				

PARAMETRIC DATA

BETA =	4.000	BDFLAP =	-11.700
ELEVON =	5.000	RUDDER =	.000
SPDBRK =	25.000	GRDPLN =	.000
LNGRPS =	1.000	LNDGDR =	100.000

SECTION (1)MN GR FRT WAL CPS DEPENDENT VARIABLE CP

MACH (1) = .230 ALPHA (1) = .010

X/LD	.050	.500	.950
X/LW			
.050	.0254	.0251	.0325
.500	.0278	.0302	.0363
.950	.0312	.0332	.0410

MACH (1) = .230 ALPHA (2) = 5.240

X/LD	.050	.500	.950
X/LW			
.050	.1963	.1543	.1818
.500	.1482	.1458	.1669
.950	.1628	.1540	.1580

MACH (1) = .230 ALPHA (3) = 10.090

X/LD	.050	.500	.950
X/LW			
.050	.4355	.4037	.4169
.500	.4034	.3865	.4014
.950	.4112	.3990	.4108

MACH (1) = .230 ALPHA (4) = 10.460

X/LD	.050	.500	.950
X/LW			
.050	.2726	.2315	.2460
.500	.2109	.2190	.2261
.950	.2355	.2308	.2348

MACH (1) = .230 ALPHA (5) = 15.730

X/LD	.050	.500	.950
X/LW			
.050	.3825	.3438	.3559
.500	.3205	.3303	.3380
.950	.3414	.3397	.3444

NAAL 737 OA143 ORB/B65-MAIN GEAR FRONT WALL CPS (RFCE39) (14 MAY 75)

REFERENCE DATA

SREF =	2690.0000 SQ.FT.	XMRP =	1076.7000 IN.XO		
LREF =	474.8000 IN.	YMRP =	.0000 IN.YO		
BREF =	936.6800 IN.	ZMRP =	375.0000 IN.ZO		
SCALE =	.0405				

PARAMETRIC DATA

BETA =	8.000	BDFLAP =	-11.700
ELEVON =	5.000	RUDDER =	.000
SPDBRK =	25.000	GRDPLN =	.000
LNGRPS =	1.000	LNDGDR =	100.000

SECTION (1)MN GR FRT WAL CPS DEPENDENT VARIABLE CP

MACH (1) = .230 ALPHA (1) = .020

X/LD	.050	.500	.950
X/LW			
.050	.0811	.0560	.0848
.500	.0533	.0479	.0689
.950	.0641	.0546	.0574

MACH (1) = .230 ALPHA (2) = 5.250

X/LD	.050	.500	.950
X/LW			
.050	.2066	.1607	.1820
.500	.1404	.1526	.1567
.950	.1641	.1685	.1675

MACH (1) = .230 ALPHA (3) = 10.460

X/LD	.050	.500	.950
X/LW			
.050	.3268	.2807	.3043
.500	.2525	.2629	.2770
.950	.2764	.2804	.2898

MACH (1) = .230 ALPHA (4) = 15.740

X/LD	.050	.500	.950
X/LW			
.050	.3990	.3619	.3848
.500	.3619	.3252	.3542
.950	.3764	.3552	.3727

MACH (1) = .230 ALPHA (5) = 18.890

X/LD	.050	.500	.950
X/LW			
.050	.4548	.3959	.4302
.500	.4121	.3464	.3787
.950	.4437	.4070	.4117

NAAL 737 OA143 ORB/B67-MAIN GEAR FRONT WALL CPS (RFCE55) (14 MAY 75)

REFERENCE DATA

SREF = 2690.0000 SQ.FT. XMRP = 1076.7000 IN.XO
LREF = 474.8000 IN. YMRP = .0000 IN.YO
BREF = 936.6800 IN. ZMRP = 375.0000 IN.ZO
SCALE = .0405

PARAMETRIC DATA

BETA = .000 BDFLAP = -11.700
ELEVON = 5.000 RUDDER = .000
SPDBRK = 25.000 GRDPLN = .000
LNGRPS = 1.000 LNDGDR = 100.000

SECTION (1)MN GR FRT WAL CPS DEPENDENT VARIABLE CP

MACH (1) = .230 ALPHA (1) = -4.160

X/LD	.050	.500	.950
X/LW			
.050	-.1521	-.1497	-.1416
.500	-.2099	-.1896	-.1551
.950	-.1064	-.1524	-.1460

MACH (1) = .230 ALPHA (2) = -2.080

X/LD	.050	.500	.950
X/LW			
.050	-.0963	-.0953	-.0888
.500	-.1466	-.1258	-.1007
.950	-.0474	-.0865	-.0854

MACH (1) = .230 ALPHA (3) = .020

X/LD	.050	.500	.950
X/LW			
.050	-.0413	-.0321	-.0291
.500	-.0729	-.0569	-.0376
.950	.0119	-.0230	-.0223

MACH (1) = .230 ALPHA (4) = 2.110

X/LD	.050	.500	.950
X/LW			
.050	.0241	.0251	.0312
.500	.0132	.0197	.0315
.950	.0566	.0420	.0498

MACH (1) = .230 ALPHA (5) = 4.200

X/LD	.050	.500	.950
X/LW			
.050	.0846	.0887	.0927
.500	.0853	.0910	.0975
.950	.0910	.0910	.0958

MACH (1) = .230 ALPHA (6) = 6.290

X/LD	.050	.500	.950
X/LW			
.050	.1707	.1439	.1734
.500	.1456	.1375	.1622
.950	.1507	.1456	.1490

MACH (1) = .230 ALPHA (7) = 8.400

X/LD	.050	.500	.950
X/LW			
.050	.2546	.1995	.2405
.500	.2066	.1985	.2200
.950	.2200	.2066	.2103

NAAL 737 OA143 ORB/B67-MAIN GEAR FRONT WALL CPS (RFCE56)

SECTION (1)MN GR FRT WAL CPS DEPENDENT VARIABLE CP

MACH (1) = .230 ALPHA (8) = 10.490

X/LD	.050	.500	.950
X/LW			
.050	.3176	.2526	.2863
.500	.2435	.2502	.2630
.950	.2785	.2617	.2624

MACH (1) = .230 ALPHA (9) = 12.590

X/LD	.050	.500	.950
X/LW			
.050	.3670	.2986	.3168
.500	.2511	.2713	.2959
.950	.3246	.3118	.3077

MACH (1) = .230 ALPHA (10) = 14.700

X/LD	.050	.500	.950
X/LW			
.050	.3991	.3222	.3509
.500	.2865	.3023	.3205
.950	.3411	.3351	.3384

MACH (1) = .230 ALPHA (11) = 16.800

X/LD	.050	.500	.950
X/LW			
.050	.4125	.3582	.3764
.500	.3282	.3420	.3535
.950	.3589	.3605	.3653

MACH (1) = .230 ALPHA (12) = 18.910

X/LD	.050	.500	.950
X/LW			
.050	.4401	.3921	.4018
.500	.3662	.3787	.3864
.950	.3938	.3944	.3968

NAAL 737 OA143,ORB/B67-MAIN GEAR FRONT WALL CPS (RFCE60) (14 MAY 75)

REFERENCE DATA

SREF =	2690.0000 SQ.FT.	XMRP =	1076.7000 IN.XO		
LREF =	474.8000 IN.	YMRP =	.0000 IN.YO		
BREF =	936.6800 IN.	ZMRP =	375.0000 IN.ZO		
SCALE =	.0405				

PARAMETRIC DATA

BETA =	8.000	BDFLAP =	-11.700
ELEVON =	5.000	RUDDER =	.000
SPDBRK =	25.000	GRDPLN =	.000
LNGRPS =	1.000	LNDGDR =	100.000

SECTION (1)MN GR FRT WAL CPS DEPENDENT VARIABLE CP

MACH (1) = .230 ALPHA (1) = -4.130

X/LD	.050	.500	.950
X/LW			
.050	-.0250	-.0243	-.0172
.500	-.0243	-.0222	-.0117
.950	-.0205	-.0161	-.0124

MACH (1) = .230 ALPHA (2) = -2.050

X/LD	.050	.500	.950
X/LW			
.050	.0268	.0136	.0373
.500	.0166	.0092	.0275
.950	.0204	.0136	.0183

MACH (1) = .230 ALPHA (3) = .020

X/LD	.050	.500	.950
X/LW			
.050	.0812	.0510	.0852
.500	.0523	.0472	.0679
.950	.0605	.0523	.0588

MACH (1) = .230 ALPHA (4) = 2.120

X/LD	.050	.500	.950
X/LW			
.050	.1332	.0929	.1197
.500	.0882	.0902	.1048
.950	.1048	.0949	.0990

MACH (1) = .230 ALPHA (5) = 4.180

X/LD	.050	.500	.950
X/LW			
.050	.1806	.1409	.1494
.500	.1138	.1253	.1365
.950	.1552	.1453	.1433

MACH (1) = .230 ALPHA (6) = 6.290

X/LD	.050	.500	.950
X/LW			
.050	.2349	.1902	.2109
.500	.1641	.1771	.1892
.950	.1933	.1953	.2004

MACH (1) = .230 ALPHA (7) = 8.380

X/LD	.050	.500	.950
X/LW			
.050	.2860	.2408	.2685
.500	.2107	.2209	.2360
.950	.2377	.2404	.2482

NAAL 737 OA143 ORB/B67-MAIN GEAR FRONT WALL CPS (RFCE60)

SECTION (1)MN OR FRT WAL CPS DEPENDENT VARIABLE CP

MACH (1) = .230 ALPHA (8) = 9.020

X/LD	.050	.500	.950
X/LW			
.050	.4110	.3690	.3964
.500	.3744	.3230	.3643
.950	.3964	.3683	.3866

MACH (1) = .230 ALPHA (9) = 10.480

X/LD	.050	.500	.950
X/LW			
.050	.3266	.2776	.3056
.500	.2543	.2594	.2756
.950	.2766	.2763	.2881

MACH (1) = .230 ALPHA (10) = 12.590

X/LD	.050	.500	.950
X/LW			
.050	.3498	.3113	.3376
.500	.2900	.2931	.3076
.950	.3106	.3059	.3218

MACH (1) = .230 ALPHA (11) = 14.680

X/LD	.050	.500	.950
X/LW			
.050	.3804	.3429	.3642
.500	.3412	.3196	.3416
.950	.3507	.3341	.3551

MACH (1) = .230 ALPHA (12) = 18.890

X/LD	.050	.500	.950
X/LW			
.050	.4546	.3931	.4306
.500	.4053	.3407	.3749
.950	.4431	.4046	.4093

NAAL 737 OA143 ORB/B66-MAIN GEAR AFT WALL CPS (RFCF01) (14 MAY 75)

REFERENCE DATA

SREF =	2690.0000 SQ.FT.	XMRP =	1076.7000 IN.XO		
LREF =	474.8000 IN.	YMRP =	.0000 IN.YO		
BREF =	936.6800 IN.	ZMRP =	375.0000 IN.ZO		
SCALE =	.0405				

PARAMETRIC DATA

BETA =	.000	BDFLAP =	-11.700
ELEVON =	5.000	RUDDER =	.000
SPDBRK =	25.000	GRDPLN =	1.000
LNGRPS =	1.000	LNDGDR =	100.000

SECTION (1)MN GR AFT WAL CPS DEPENDENT VARIABLE CP

MACH (1) = .200 ALPHA (1) = .010

X/LD	.050	.500	.950
X/LW			
.050	.1322	.1031	-.2589
.500	.0805	-.0336	-.0985
.950	.0757	.0192	-.2911

MACH (1) = .200 ALPHA (2) = 5.380

X/LD	.050	.500	.950
X/LW			
.050	.3792	.3516	.0532
.500	.4051	.2525	.3281
.950	.3737	.2937	-.1971

MACH (1) = .200 ALPHA (3) = 10.710

X/LD	.050	.500	.950
X/LW			
.050	.6858	.6572	.1576
.500	.6083	.4935	.4239
.950	.6718	.6640	.1040

MACH (1) = .200 ALPHA (4) = 16.140

X/LD	.050	.500	.950
X/LW			
.050	.7687	.7283	.2887
.500	.7068	.6121	.4979
.950	.7455	.7452	.3228

MACH (1) = .200 ALPHA (5) = 19.380

X/LD	.050	.500	.950
X/LW			
.050	.8060	.7671	.3906
.500	.7605	.6691	.5543
.950	.7802	.7758	.4371

NAAL 737 OA143 ORB/B66-MAIN GEAR AFT WALL CPS (RFCF02) (14 MAY 75)

REFERENCE DATA

SREF =	2690.0000 SQ.FT.	XMRP =	1076.7000 IN.XO		
LREF =	474.8000 IN.	YMRP =	.0000 IN.YO		
BREF =	936.6800 IN.	ZMRP =	375.0000 IN.ZO		
SCALE =	.0405				

PARAMETRIC DATA

BETA =	-4.000	BDFLAP =	-11.700
ELEVON =	5.000	RUDDER =	.000
SPDBRK =	25.000	GRDPLN =	1.000
LNGRPS =	1.000	LNDGDR =	100.000

SECTION (1)MN GR AFT WAL CPS DEPENDENT VARIABLE CP

MACH (1) = .200 ALPHA (1) = .010

X/LD	.050	.500	.950
X/LW			
.050	-.1124	-.1099	-.0994
.500	-.1623	-.1468	-.1116
.950	-.0587	-.1099	-.0927

MACH (1) = .200 ALPHA (2) = 5.370

X/LD	.050	.500	.950
X/LW			
.050	.1778	.1803	.1857
.500	.1836	.1807	.1882
.950	.1840	.1844	.1865

MACH (1) = .200 ALPHA (3) = 10.760

X/LD	.050	.500	.950
X/LW			
.050	.4802	.4153	.4265
.500	.3737	.3924	.4132
.950	.4336	.4186	.4195

MACH (1) = .200 ALPHA (4) = 16.150

X/LD	.050	.500	.950
X/LW			
.050	.5935	.5562	.5755
.500	.5324	.5438	.5549
.950	.5549	.5521	.5582

MACH (1) = .200 ALPHA (5) = 19.360

X/LD	.050	.500	.950
X/LW			
.050	.6615	.6381	.6525
.500	.6410	.6254	.6398
.950	.6533	.6410	.6439

NAAL 737 OA143 ORB/B66-MAIN GEAR AFT WALL CPS (RFCF03) (14 MAY 75)

REFERENCE DATA

SREF =	2690.0000 SQ.FT.	XMRP =	1076.7000 IN.XO
LREF =	474.8000 IN.	YMRP =	.0000 IN.YO
BREF =	936.6800 IN.	ZMRP =	375.0000 IN.ZO
SCALE =	.0405		

PARAMETRIC DATA

BETA =	-8.000	BDFLAP =	-11.700
ELEVON =	5.000	RUDDER =	.000
SPDBRK =	25.000	GRDPLN =	1.000
LNGRPS =	1.000	LNDGDR =	100.000

SECTION (1)MN GR AFT WAL CPS DEPENDENT VARIABLE CP

MACH (1) = .200 ALPHA (1) = .030

X/LD	.050	.500	.950
X/LW			
.050	.2656	.3990	-.2534
.500	.0164	-.1890	-.2449
.950	.1861	.0352	-.2229

MACH (1) = .200 ALPHA (2) = 5.380

X/LD	.050	.500	.950
X/LW			
.050	.2995	.2301	-.1087
.500	.2641	.1161	.0729
.950	.2767	.1957	-.0442

MACH (1) = .200 ALPHA (3) = 10.760

X/LD	.050	.500	.950
X/LW			
.050	.4745	.4440	.2744
.500	.5223	.3902	.5649
.950	.4688	.4014	.0444

MACH (1) = .200 ALPHA (4) = 16.170

X/LD	.050	.500	.950
X/LW			
.050	.7573	.7336	.4392
.500	.7021	.6270	.6233
.950	.7546	.7478	.3641

MACH (1) = .200 ALPHA (5) = 19.400

X/LD	.050	.500	.950
X/LW			
.050	.8252	.8040	.5044
.500	.7757	.7149	.6728
.950	.8124	.8100	.4973

NAAL 737 OA143 ORB/B66-MAIN GEAR AFT WALL CPS (RFCF04) (14 MAY 75)

REFERENCE DATA

SREF =	2690.0000 SQ.FT.	XMRP =	1076.7000 IN.XO
LREF =	474.8000 IN.	YMRP =	.0000 IN.YO
BREF =	936.6800 IN.	ZMRP =	375.0000 IN.ZO
SCALE =	.0405		

PARAMETRIC DATA

BETA =	4.000	BDFLAP =	-11.700
ELEVON =	5.000	RUDDER =	.000
SPDBRK =	25.000	GRDPLN =	1.000
LNGRPS =	1.000	LNDGDR =	100.000

SECTION (1)MN GR AFT WAL CPS DEPENDENT VARIABLE CP

MACH (1) = .200 ALPHA (1) = .000

X/LD	.050	.500	.950
X/LW			
.050	.1067	.0836	-.1840
.500	.1620	.0450	.1626
.950	.1357	.0566	-.4304

MACH (1) = .200 ALPHA (2) = 5.340

X/LD	.050	.500	.950
X/LW			
.050	.4658	.4341	-.0659
.500	.3983	.3083	.1992
.950	.4716	.4713	-.1110

MACH (1) = .200 ALPHA (3) = 10.730

X/LD	.050	.500	.950
X/LW			
.050	.6651	.6237	.0489
.500	.5934	.4869	.3168
.950	.6484	.6454	.1138

MACH (1) = .200 ALPHA (4) = 16.140

X/LD	.050	.500	.950
X/LW			
.050	.7724	.7289	.2039
.500	.7218	.6054	.4279
.950	.7417	.7319	.3034

MACH (1) = .200 ALPHA (5) = 19.370

X/LD	.050	.500	.950
X/LW			
.050	.8043	.7701	.3295
.500	.7688	.6699	.5097
.950	.7812	.7825	.4132

NAAL 737 OA143 ORB/B66-MAIN GEAR AFT WALL CPS (RFCF05) (14 MAY 75)

REFERENCE DATA

SREF =	2690.0000 SQ.FT.	XMRP =	1076.7000 IN.XO		
LREF =	474.8000 IN.	YMRP =	.0000 IN.YO		
BREF =	936.6800 IN.	ZMRP =	375.0000 IN.ZO		
SCALE =	.0405				

PARAMETRIC DATA

BETA =	8.000	BDFLAP =	-11.700
ELEVON =	5.000	RUDDER =	.000
SPDBRK =	25.000	GRDPLN =	1.000
LNGRPS =	1.000	LNDGDR =	100.000

SECTION (1)MN GR AFT WAL CPS DEPENDENT VARIABLE CP

MACH (1) = .200 ALPHA (1) = .030

X/LD	.050	.500	.950
X/LW			
.050	.1650	.1470	-.1725
.500	.1817	.0837	.0997
.950	.1929	.1470	-.3886

MACH (1) = .200 ALPHA (2) = 5.360

X/LD	.050	.500	.950
X/LW			
.050	.6196	.5691	-.1633
.500	.5398	.4052	.2209
.950	.5950	.5886	-.1146

MACH (1) = .200 ALPHA (3) = 10.770

X/LD	.050	.500	.950
X/LW			
.050	.7393	.6864	-.0056
.500	.6688	.5329	.2982
.950	.7128	.7078	.0986

MACH (1) = .200 ALPHA (4) = 16.160

X/LD	.050	.500	.950
X/LW			
.050	.7868	.7490	.1695
.500	.7361	.6140	.3858
.950	.7483	.7496	.2795

MACH (1) = .200 ALPHA (5) = 19.390

X/LD	.050	.500	.950
X/LW			
.050	.8036	.7653	.2948
.500	.7592	.6490	.4773
.950	.7774	.7841	.3627

NAAL 737 OA143 ORB/B66-MAIN GEAR AFT WALL CPS (RFCF06) (14 MAY 75)

REFERENCE DATA

SREF =	2690.0000 SQ.FT.	XMRP =	1076.7000 IN.XO		
LREF =	474.8000 IN.	YMRP =	.0000 IN.YO		
BREF =	936.6800 IN.	ZMRP =	375.0000 IN.ZO		
SCALE =	.0405				

PARAMETRIC DATA

BETA =	.000	BDFLAP =	-11.700
ELEVON =	10.000	RUDDER =	.000
SPDBRK =	25.000	GRDPLN =	1.000
LNGRPS =	1.000	LNDGDR =	100.000

SECTION (1)MN GR AFT WAL CPS DEPENDENT VARIABLE CP

MACH (1) = .200 ALPHA (1) = .110

X/LD	.050	.500	.950
X/LW			
.050	.1507	.1315	-.1989
.500	.1085	-.0019	-.0388
.950	.0913	.0402	-.2435

MACH (1) = .200 ALPHA (2) = 5.470

X/LD	.050	.500	.950
X/LW			
.050	.4275	.3950	.0990
.500	.4337	.2824	.3577
.950	.4073	.3279	-.1386

MACH (1) = .200 ALPHA (3) = 10.840

X/LD	.050	.500	.950
X/LW			
.050	.6917	.6656	.1882
.500	.6139	.5153	.4349
.950	.6768	.6666	.1453

MACH (1) = .200 ALPHA (4) = 16.230

X/LD	.050	.500	.950
X/LW			
.050	.7789	.7428	.3217
.500	.7206	.6301	.5174
.950	.7590	.7530	.3608

MACH (1) = .200 ALPHA (5) = 19.450

X/LD	.050	.500	.950
X/LW			
.050	.8140	.7786	.4092
.500	.7715	.6869	.5725
.950	.7938	.7914	.4619

NAAL 737 OA143 ORB/B66-MAIN GEAR AFT WALL CPS (RFCF07) (14 MAY 75)

REFERENCE DATA

SREF =	2690.0000 SQ.FT.	XMRP =	1076.7000 IN.XO		
LREF =	474.8000 IN.	YMRP =	.0000 IN.YO		
BREF =	936.6800 IN.	ZMRP =	375.0000 IN.ZO		
SCALE =	.0405				

PARAMETRIC DATA

BETA =	-4.000	BDFLAP =	-11.700
ELEVON =	10.000	RUDDER =	.000
SPDBRK =	25.000	GRDPLN =	1.000
LNGRPS =	1.000	LNDGDR =	100.000

SECTION (1)MN GR AFT WAL CPS DEPENDENT VARIABLE CP

MACH (1) = .200 ALPHA (1) = .130

X/LD	.050	.500	.950
X/LW			
.050	.1721	.1142	-.2681
.500	.1050	-.0584	-.1142
.950	.1738	.1343	-.2113

MACH (1) = .200 ALPHA (2) = 5.470

X/LD	.050	.500	.950
X/LW			
.050	.2711	.2381	.0507
.500	.2813	.2048	.3768
.950	.2619	.2126	-.1012

MACH (1) = .200 ALPHA (3) = 10.870

X/LD	.050	.500	.950
X/LW			
.050	.6420	.6113	.3181
.500	.5967	.4847	.5133
.950	.6304	.6018	.1400

MACH (1) = .200 ALPHA (4) = 16.240

X/LD	.050	.500	.950
X/LW			
.050	.8003	.7672	.3860
.500	.7426	.6636	.5987
.950	.7862	.7841	.3918

MACH (1) = .200 ALPHA (5) = 19.450

X/LD	.050	.500	.950
X/LW			
.050	.8364	.8112	.4752
.500	.7931	.7281	.6580
.950	.8230	.8243	.5178

NAAL 737 OA143 ORB/B66-MAIN GEAR AFT WALL CPS (RFCF08) (14 MAY 75)

REFERENCE DATA

SREF =	2690.0000 SQ.FT.	XMRP =	1076.7000 IN.XO		
LREF =	474.8000 IN.	YMRP =	.0000 IN.YO		
BREF =	936.6800 IN.	ZMRP =	375.0000 IN.ZO		
SCALE =	.0405				

PARAMETRIC DATA

BETA =	-8.000	BDFLAP =	-11.700
ELEVON =	10.000	RUDDER =	.000
SPDBRK =	25.000	GRDPLN =	1.000
LNGRPS =	1.000	LNDGDR =	100.000

SECTION (1)MN GR AFT WAL CPS DEPENDENT VARIABLE CP

MACH (1) = .200 ALPHA (1) = .120

X/LD	.050	.500	.950
X/LW			
.050	.2615	.3271	-.2050
.500	.0403	-.1558	-.2050
.950	.2369	.0618	-.1863

MACH (1) = .200 ALPHA (2) = 5.490

X/LD	.050	.500	.950
X/LW			
.050	.3205	.2647	-.0611
.500	.2845	.1460	.1157
.950	.2933	.2110	-.0077

MACH (1) = .200 ALPHA (3) = 10.870

X/LD	.050	.500	.950
X/LW			
.050	.5035	.4754	.3149
.500	.5539	.4134	.5830
.950	.4974	.4239	.0894

MACH (1) = .200 ALPHA (4) = 16.230

X/LD	.050	.500	.950
X/LW			
.050	.7679	.7406	.4692
.500	.7133	.6400	.6360
.950	.7575	.7554	.3970

MACH (1) = .200 ALPHA (5) = 19.440

X/LD	.050	.500	.950
X/LW			
.050	.8336	.8107	.5351
.500	.7877	.7287	.6865
.950	.8194	.8194	.5185

NAAL 737 OA143 ORB/B66-MAIN GEAR AFT WALL CPS (RFCF09) (14 MAY 75)

REFERENCE DATA

SREF =	2690.0000 SQ.FT.	XMRP =	1078.7000 IN.XO		
LREF =	474.8000 IN.	YMRP =	.0000 IN.YO		
BREF =	938.6800 IN.	ZMRP =	375.0000 IN.ZO		
SCALE =	.0405				

PARAMETRIC DATA

BETA =	4.000	BDFLAP =	-11.700
ELEVON =	10.000	RUDDER =	.000
SPDBRK =	25.000	GRDPLN =	1.000
LNGRPS =	1.000	LNDGDR =	100.000

SECTION (1)MN OR AFT WAL CPS DEPENDENT VARIABLE CP

MACH (1) = .200 ALPHA (1) = .110

X/LD	.050	.500	.950
X/LW			
.050	.1446	.1187	-.1269
.500	.1995	.0744	.1882
.950	.1685	.0853	-.3848

MACH (1) = .200 ALPHA (2) = 5.450

X/LD	.050	.500	.950
X/LW			
.050	.4868	.4559	-.0263
.500	.4157	.3255	.2189
.950	.4913	.4766	-.0543

MACH (1) = .200 ALPHA (3) = 10.830

X/LD	.050	.500	.950
X/LW			
.050	.6698	.6296	.0910
.500	.6052	.4991	.3385
.950	.6522	.6455	.1498

MACH (1) = .200 ALPHA (4) = 16.230

X/LD	.050	.500	.950
X/LW			
.050	.7726	.7348	.2328
.500	.7324	.6132	.4463
.950	.7486	.7473	.3281

MACH (1) = .200 ALPHA (5) = 19.440

X/LD	.050	.500	.950
X/LW			
.050	.8163	.7843	.3519
.500	.7789	.6758	.5203
.950	.7917	.7907	.4297

NAAL 737 OA143 ORB/B66-MAIN GEAR AFT WALL CPS (RFCF10) (14 MAY 75)

REFERENCE DATA

SREF =	2690.0000 SQ.FT.	XMRP =	1076.7000 IN.XO		
LREF =	474.8000 IN.	YMRP =	.0000 IN.YO		
BREF =	936.6800 IN.	ZMRP =	375.0000 IN.ZO		
SCALE =	.0405				

PARAMETRIC DATA

BETA =	8.000	BDFLAP =	-11.700
ELEVON =	10.000	RUDDER =	.000
SPDBRK =	25.000	GROPLN =	1.000
LNGRPS =	1.000	LNDGDR =	100.000

SECTION (1)MN GR AFT WAL CPS DEPENDENT VARIABLE CP

MACH (1) = .200 ALPHA (1) = .110

X/LD	.050	.500	.950
X/LW			
.050	.1970	.1772	-.1310
.500	.2076	.1105	.1214
.950	.2216	.1782	-.3346

MACH (1) = .200 ALPHA (2) = 5.430

X/LD	.050	.500	.950
X/LW			
.050	.6313	.5801	-.1195
.500	.5532	.4225	.2406
.950	.6101	.5931	-.0656

MACH (1) = .200 ALPHA (3) = 10.830

X/LD	.050	.500	.950
X/LW			
.050	.7517	.6962	.0317
.500	.6873	.5475	.3175
.950	.7234	.7142	.1334

MACH (1) = .200 ALPHA (4) = 16.230

X/LD	.050	.500	.950
X/LW			
.050	.7913	.7553	.1982
.500	.7458	.6188	.3984
.950	.7580	.7580	.2990

MACH (1) = .200 ALPHA (5) = 19.430

X/LD	.050	.500	.950
X/LW			
.050	.8043	.7670	.3119
.500	.7660	.6516	.4975
.950	.7828	.7905	.3660

NAAL 737 OA143 ORB/B66-MAIN GEAR AFT WALL CPS (RFCF11) (14 MAY 75)

REFERENCE DATA

SREF =	2690.0000 SQ.FT.	XMRP =	1076.7000 IN.XO		
LREF =	474.8000 IN.	YMRP =	.0000 IN.YO		
BREF =	936.6800 IN.	ZMRP =	375.0000 IN.ZO		
SCALE =	.0405				

PARAMETRIC DATA

BETA =	.000	BDFLAP =	-11.700
ELEVON =	15.000	RUDDER =	.000
SPDBRK =	25.000	GRDPLN =	1.000
LNGRPS =	1.000	LNDGDR =	100.000

SECTION (1)MN GR AFT WAL CPS DEPENDENT VARIABLE CP

MACH (1) = .200 ALPHA (1) = .190

X/LD	.050	.500	.950
X/LW			
.050	.1596	.1438	-.1399
.500	.1250	.0250	.0117
.950	.1055	.0630	-.2021

MACH (1) = .200 ALPHA (2) = 5.560

X/LD	.050	.500	.950
X/LW			
.050	.4562	.4193	.1378
.500	.4518	.3031	.3903
.950	.4296	.3503	-.0868

MACH (1) = .200 ALPHA (3) = 10.920

X/LD	.050	.500	.950
X/LW			
.050	.7132	.6863	.2158
.500	.6356	.5302	.4570
.950	.6969	.6833	.1780

MACH (1) = .200 ALPHA (4) = 16.300

X/LD	.050	.500	.950
X/LW			
.050	.7805	.7448	.3542
.500	.7242	.6393	.5308
.950	.7646	.7532	.3778

MACH (1) = .200 ALPHA (5) = 19.510

X/LD	.050	.500	.950
X/LW			
.050	.8090	.7752	.4302
.500	.7715	.6906	.5800
.950	.7892	.7872	.4673

NAAL 737 OA143 ORB/B66-MAIN GEAR AFT WALL CPS (RFCF12) (14 MAY 75)

REFERENCE DATA

SREF =	2690.0000 SQ.FT.	XMRP =	1076.7000 IN.XO		
LREF =	474.8000 IN.	YMRP =	.0000 IN.YO		
BREF =	936.6800 IN.	ZMRP =	375.0000 IN.ZO		
SCALE =	.0405				

PARAMETRIC DATA

BETA =	-4.000	BDFLAP =	-11.700
ELEVON =	15.000	RUDDER =	.000
SPDBRK =	25.000	GRDPLN =	1.000
LNGRPS =	1.000	LNDGDR =	100.000

SECTION (1)MN GR AFT WAL CPS DEPENDENT VARIABLE CP

MACH (1) = .200 ALPHA (1) = .200

X/LD	.050	.500	.950
X/LW			
.050	.1843	.1088	-.2263
.500	.1282	-.0274	-.0756
.950	.1905	.1477	-.1761

MACH (1) = .200 ALPHA (2) = 5.570

X/LD	.050	.500	.950
X/LW			
[illegible]	.2974	.2606	.1035
.500	.3203	.2288	.4258
.950	.2926	.2384	-.0921

MACH (1) = .200 ALPHA (3) = 10.970

X/LD	.050	.500	.950
X/LW			
.050	.6630	.6382	.3441
.500	.6080	.5074	.5288
.950	.6555	.6368	.1729

MACH (1) = .200 ALPHA (4) = 16.300

X/LD	.050	.500	.950
X/LW			
.050	.8046	.7751	.4137
.500	.7518	.6830	.6108
.950	.7982	.7948	.4181

MACH (1) = .200 ALPHA (5) = 19.500

X/LD	.050	.500	.950
X/LW			
.050	.8478	.8192	.4994
.500	.8047	.7388	.6732
.950	.8333	.8346	.5327

NAAL 737 OA143 ORB/866-MAIN GEAR AFT WALL CPS (RFCF13) (14 MAY 75)

REFERENCE DATA

SREF =	2690.0000 SQ.FT.	XMRP =	1076.7000 IN.XO		
LREF =	474.8000 IN.	YMRP =	.0000 IN.YO		
BREF =	936.6800 IN.	ZMRP =	375.0000 IN.ZO		
SCALE =	.0405				

PARAMETRIC DATA

BETA =	-8.000	BDFLAP =	-11.700
ELEVON =	15.000	RUDDER =	.000
SPDBRK =	25.000	GRDPLN =	1.000
LNGRPS =	1.000	LNDGDR =	100.000

SECTION (1)MN GR AFT WAL CPS DEPENDENT VARIABLE CP

MACH (1) = .200 ALPHA (1) = .210

X/LD	.050	.500	.950
X/LW			
.050	.1830	.2528	-.1782
.500	.0566	-.0990	-.0882
.950	.1602	.0815	-.1795

MACH (1) = .200 ALPHA (2) = 5.590

X/LD	.050	.500	.950
X/LW			
.050	.3384	.2838	-.0168
.500	.3053	.1737	.1604
.950	.3043	.2316	.0308

MACH (1) = .200 ALPHA (3) = 10.970

X/LD	.050	.500	.950
X/LW			
.050	.5426	.5117	.3626
.500	.5887	.4385	.6036
.950	.5256	.4545	.1383

MACH (1) = .200 ALPHA (4) = 16.340

X/LD	.050	.500	.950
X/LW			
.050	.7801	.7591	.4894
.500	.7246	.6603	.6542
.950	.7767	.7659	.4271

MACH (1) = .200 ALPHA (5) = 19.520

X/LD	.050	.500	.950
X/LW			
.050	.8393	.8171	.5549
.500	.7926	.7410	.7047
.950	.8259	.8235	.5421

NAAL 737 OA143 ORB/B66-MAIN GEAR AFT WALL CPS (RFCF14) (14 MAY 75)

REFERENCE DATA

SREF =	2690.0000 SQ.FT.	XMRP =	1076.7000 IN.XO		
LREF =	474.8000 IN.	YMRP =	.0000 IN.YO		
BREF =	936.6800 IN.	ZMRP =	375.0000 IN.ZO		
SCALE =	.0405				

PARAMETRIC DATA

BETA =	4.000	BDFLAP =	-11.700
ELEVON =	15.000	RUDDER =	.000
SPDBRK =	25.000	GRDPLN =	1.000
LNGRPS =	1.000	LNDGDR =	100.000

SECTION (1)MN GR AFT WAL CPS DEPENDENT VARIABLE CP

MACH (1) = .200 ALPHA (1) = .170

X/LD	.050	.500	.950
X/LW			
.050	.1827	.1543	-.0716
.500	.2336	.1030	.2186
.950	.2032	.1177	-.3368

MACH (1) = .200 ALPHA (2) = 5.550

X/LD	.050	.500	.950
X/LW			
.050	.4983	.4621	.0086
.500	.4240	.3418	.2453
.950	.5020	.4881	-.0019

MACH (1) = .200 ALPHA (3) = 10.910

X/LD	.050	.500	.950
X/LW			
.050	.6892	.6487	.1273
.500	.6229	.5170	.3642
.950	.6726	.6651	.1872

MACH (1) = .200 ALPHA (4) = 16.300

X/LD	.050	.500	.950
X/LW			
.050	.7779	.7418	.2663
.500	.7355	.6237	.4575
.950	.7550	.7486	.3457

MACH (1) = .200 ALPHA (5) = 19.500

X/LD	.050	.500	.950
X/LW			
.050	.8250	.7956	.3778
.500	.7848	.6884	.5366
.950	.7953	.7956	.4388

NAAL 737 OA143 ORB/B66-MAIN GEAR AFT WALL CPS (RFCF15) (14 MAY 75)

REFERENCE DATA

SREF =	2690.0000 SQ.FT.	XMRP =	1078.7000 IN.XO		
LREF =	474.8000 IN.	YMRP =	.0000 IN.YO		
BREF =	936.6800 IN.	ZMRP =	375.0000 IN.ZO		
SCALE =	.0405				

PARAMETRIC DATA

BETA =	8.000	BDFLAP =	-11.700
ELEVON =	15.000	RUDDER =	.000
SPDBRK =	25.000	GRDPLN =	1.000
LNGRPS =	1.000	LNDGDR =	100.000

SECTION (1)MN GR AFT WAL CPS DEPENDENT VARIABLE CP

MACH (1) = .200 ALPHA (1) = .200

X/LD	.050	.500	.950
X/LW			
.050	.2295	.2063	-.0842
.500	.2373	.1371	.1518
.950	.2472	.2080	-.2738

MACH (1) = .200 ALPHA (2) = 5.550

X/LD	.050	.500	.950
X/LW			
.050	.6525	.5985	-.0765
.500	.5736	.4439	.2711
.950	.6259	.6170	-.0321

MACH (1) = .200 ALPHA (3) = 10.930

X/LD	.050	.500	.950
X/LW			
.050	.7590	.7075	.0698
.500	.6933	.5583	.3416
.950	.7299	.7262	.1693

MACH (1) = .200 ALPHA (4) = 16.300

X/LD	.050	.500	.950
X/LW			
.050	.7999	.7651	.2180
.500	.7505	.6319	.4123
.950	.7624	.7620	.3160

MACH (1) = .200 ALPHA (5) = 19.510

X/LD	.050	.500	.950
X/LW			
.050	.8113	.7767	.3230
.500	.7717	.6583	.5101
.950	.7895	.7968	.3884

NAAL 737 OA143 ORB/B66-MAIN GEAR AFT WALL CPS (RFCF16) (14 MAY 75)

REFERENCE DATA

SREF =	2690.0000 SQ.FT.	XMRP =	1076.7000 IN.XO		
LREF =	474.8000 IN.	YMRP =	.0000 IN.YO		
BREF =	936.6800 IN.	ZMRP =	375.0000 IN.ZO		
SCALE =	.0405				

PARAMETRIC DATA

BETA =	.000	BDFLAP =	-11.700
ELEVON =	15.000	RUDDER =	.000
SPDBRK =	25.000	GRDPLN =	.000
LNGRPS =	1.000	LNDGDR =	100.000

SECTION (1)MN GR AFT WAL CPS DEPENDENT VARIABLE CP

MACH (1) = .230 ALPHA (1) = .120

X/LD	.050	.500	.950
X/LW			
.050	.1835	.1490	-.1761
.500	.1278	-.0040	-.0021
.950	.1570	.0964	-.1406

MACH (1) = .230 ALPHA (2) = 5.370

X/LD	.050	.500	.950
X/LW			
.050	.2264	.1823	.0522
.500	.2713	.1463	.3549
.950	.2374	.1632	-.1925

MACH (1) = .230 ALPHA (3) = 10.620

X/LD	.050	.500	.950
X/LW			
.050	.5054	.4662	.1822
.500	.4953	.3108	.4366
.950	.4673	.3689	-.0372

MACH (1) = .230 ALPHA (4) = 15.880

X/LD	.050	.500	.950
X/LW			
.050	.6759	.6403	.1847
.500	.5912	.4781	.4539
.950	.6621	.6428	.1098

MACH (1) = .230 ALPHA (5) = 19.030

X/LD	.050	.500	.950
X/LW			
.050	.7328	.6935	.1861
.500	.6556	.5469	.4629
.950	.6982	.6911	.1519

NAAL 737 OA143 ORB/B66-MAIN GEAR AFT WALL CPS (RFCF17) (14 MAY 75)

REFERENCE DATA

SREF =	2690.0000 SQ.FT.	XMRP =	1076.7000 IN.XO		
LREF =	474.8000 IN.	YMRP =	.0000 IN.YO		
BREF =	936.6800 IN.	ZMRP =	375.0000 IN.ZO		
SCALE =	.0405				

PARAMETRIC DATA

BETA =	-4.000	BDFLAP =	-11.700
ELEVON =	15.000	RUDDER =	.000
SPDBRK =	25.000	GRDPLN =	.000
LNGRPS =	1.000	LNDGDR =	100.000

SECTION (1)MN GR AFT WAL CPS DEPENDENT VARIABLE CP

MACH (1) = .230 ALPHA (1) = .130

X/LD	.050	.500	.950
X/LW			
.050	.1737	.0988	-.1714
.500	.1122	-.0553	-.0155
.950	.1729	.1240	-.1310

MACH (1) = .230 ALPHA (2) = 5.410

X/LD	.050	.500	.950
X/LW			
.050	.2520	.2126	-.0809
.500	.2154	.0849	.0953
.950	.1948	.1343	-.0526

MACH (1) = .230 ALPHA (3) = 10.640

X/LD	.050	.500	.950
X/LW			
.050	.3573	.3178	.1614
.500	.4147	.2546	.4762
.950	.3600	.2723	-.1243

MACH (1) = .230 ALPHA (4) = 15.910

X/LD	.050	.500	.950
X/LW			
.050	.6036	.5657	.2785
.500	.5724	.4267	.4994
.950	.5790	.4955	.0942

MACH (1) = .230 ALPHA (5) = 19.060

X/LD	.050	.500	.950
X/LW			
.050	.7007	.6727	.2610
.500	.6266	.5270	.5121
.950	.6991	.6769	.1723

NAAL 737 OA143 ORB/B66-MAIN GEAR AFT WALL CPS (RFCF18) (14 MAY 75)

REFERENCE DATA

SREF =	2690.0000 SQ.FT.	XMRP =	1076.7000 IN.XO		
LREF =	474.8000 IN.	YMRP =	.0000 IN.YO		
BREF =	936.6800 IN.	ZMRP =	375.0000 IN.ZO		
SCALE =	.0405				

PARAMETRIC DATA

BETA =	-8.000	BDFLAP =	-11.700
ELEVON =	15.000	RUDDER =	.000
SPDBRK =	25.000	GRDPLN =	.000
LNGRPS =	1.000	LNDGDR =	100.000

SECTION (1)MN GR AFT WAL CPS DEPENDENT VARIABLE CP

MACH (1) = .230 ALPHA (1) = .140

X/LD	.050	.500	.950
X/LW			
.050	.1396	.0902	-.1258
.500	.0442	-.1422	-.0849
.950	.1149	.0077	-.1804

MACH (1) = .230 ALPHA (2) = 5.420

X/LD	.050	.500	.950
X/LW			
.050	.2170	.1201	-.0839
.500	.1785	.0208	.0265
.950	.2288	.1190	-.0717

MACH (1) = .230 ALPHA (3) = 10.650

X/LD	.050	.500	.950
X/LW			
.050	.3309	.2928	.0170
.500	.3006	.1922	.2313
.950	.2606	.2192	.0263

MACH (1) = .230 ALPHA (4) = 15.920

X/LD	.050	.500	.950
X/LW			
.050	.4657	.4317	.2539
.500	.5285	.3628	.5294
.950	.4629	.3755	.0140

MACH (1) = .230 ALPHA (5) = 19.070

X/LD	.050	.500	.950
X/LW			
.050	.5969	.5590	.3190
.500	.6154	.4508	.5232
.950	.5647	.4814	.1522

NAAL 737 OA143 ORB/B66-MAIN GEAR AFT WALL CPS (RFCF19) (14 MAY 75)

REFERENCE DATA

SREF =	2690.0000 SQ.FT.	XMRP =	1076.7000 IN.XO		
LREF =	474.8000 IN.	YMRP =	.0000 IN.YO		
BREF =	936.6800 IN.	ZMRP =	375.0000 IN.ZO		
SCALE =	.0405				

PARAMETRIC DATA

BETA =	4.000	BDFLAP =	-11.700
ELEVON =	15.000	RUDDER =	.000
SPDBRK =	25.000	GRDPLN =	.000
LNGRPS =	1.000	LNDGDR =	100.000

SECTION (1)MN GR AFT WAL CPS DEPENDENT VARIABLE CP

MACH (1) = .230 ALPHA (1) = .150

X/LD	.050	.500	.950
X/LW			
.050	.1238	.1041	-.0848
.500	.1314	.0609	.1328
.950	.1085	.0699	-.1854

MACH (1) = .230 ALPHA (2) = 5.360

X/LD	.050	.500	.950
X/LW			
.050	.3216	.2921	.0697
.500	.3447	.2046	.3007
.950	.3265	.2327	-.1718

MACH (1) = .230 ALPHA (3) = 10.620

X/LD	.050	.500	.950
X/LW			
.050	.5046	.4677	.0455
.500	.4354	.3472	.2822
.950	.5038	.4917	.0222

MACH (1) = .230 ALPHA (4) = 15.860

X/LD	.050	.500	.950
X/LW			
.050	.6657	.6322	.0872
.500	.5951	.4780	.3619
.950	.6503	.6456	.1202

MACH (1) = .230 ALPHA (5) = 19.040

X/LD	.050	.500	.950
X/LW			
.050	.7210	.6766	.1034
.500	.6494	.5393	.3937
.950	.6999	.6906	.1655

NAAL 737 OA143 ORB/B66-MAIN GEAR AFT WALL CPS (RFCF20) (14 MAY 75)

REFERENCE DATA

SREF =	2690.0000 SQ.FT.	XMRP =	1076.7000 IN.XO		
LREF =	474.8000 IN.	YMRP =	.0000 IN.YO		
BREF =	936.6800 IN.	ZMRP =	375.0000 IN.ZO		
SCALE =	.0405				

PARAMETRIC DATA

BETA =	8.000	BDFLAP =	-11.700
ELEVON =	15.000	RUDDER =	.000
SPDBRK =	25.000	GRDPLN =	.000
LNGRPS =	1.000	LNDGDR =	100.000

SECTION (1)MN GR AFT WAL CPS DEPENDENT VARIABLE CP

MACH (1) = .230 ALPHA (1) = .130

X/LD	.050	.500	.950
X/LW			
.050	.1634	.1345	-.0222
.500	.2006	.0921	.2031
.950	.1938	.1149	-.2363

MACH (1) = .230 ALPHA (2) = 5.350

X/LD	.050	.500	.950
X/LW			
.050	.4012	.3719	-.0333
.500	.3485	.2663	.2081
.950	.4086	.4092	-.0412

MACH (1) = .230 ALPHA (3) = 10.610

X/LD	.050	.500	.950
X/LW			
.050	.6334	.5884	-.0002
.500	.5596	.4424	.3190
.950	.6180	.6084	.0376

MACH (1) = .230 ALPHA (4) = 15.840

X/LD	.050	.500	.950
X/LW			
.050	.7292	.6815	.0386
.500	.6554	.5324	.3643
.950	.7083	.7052	.1287

MACH (1) = .230 ALPHA (5) = 19.010

X/LD	.050	.500	.950
X/LW			
.050	.7538	.7103	.0602
.500	.6921	.5643	.3742
.950	.7342	.7301	.1636

NAAL 737 OA143 ORB/B66-MAIN GEAR AFT WALL CPS (RFCF21) (14 MAY 75)

REFERENCE DATA

SREF =	2690.0000 SQ.FT.	XMRP =	1076.7000 IN.XO		
LREF =	474.8000 IN.	YMRP =	.0000 IN.YO		
BREF =	936.6800 IN.	ZMRP =	375.0000 IN.ZO		
SCALE =	.0405				

PARAMETRIC DATA

BETA =	.000	BDFLAP =	-11.700
ELEVON =	10.000	RUDDER =	.000
SPDBRK =	25.000	GRDPLN =	.000
LNGRPS =	1.000	LNDGDR =	100.000

SECTION (1)MN GR AFT WAL CPS DEPENDENT VARIABLE CP

MACH (1) = .230 ALPHA (1) = .080

X/LD	.050	.500	.950
X/LW			
.050	.1703	.1350	-.2013
.500	.1161	-.0226	-.0217
.950	.1517	.0965	-.1556

MACH (1) = .230 ALPHA (2) = 5.340

X/LD	.050	.500	.950
X/LW			
.050	.2117	.1685	.0244
.500	.2454	.1352	.3374
.950	.2137	.1516	-.1990

MACH (1) = .230 ALPHA (3) = 10.550

X/LD	.050	.500	.950
X/LW			
.050	.4761	.4426	.1564
.500	.4865	.2951	.4160
.950	.4443	.3403	-.0715

MACH (1) = .230 ALPHA (4) = 15.810

X/LD	.050	.500	.950
X/LW			
.050	.6718	.6397	.1786
.500	.5829	.4695	.4498
.950	.6557	.6372	.0849

MACH (1) = .230 ALPHA (5) = 18.980

X/LD	.050	.500	.950
X/LW			
.050	.7310	.7007	.1597
.500	.6473	.5393	.4606
.950	.7015	.6908	.1477

NAAL 737 OA143 ORB/B66-MAIN GEAR AFT WALL CPS (RFCF22) (14 MAY 75)

REFERENCE DATA

SREF =	2690.0000 SQ.FT.	XMRP =	1076.7000 IN.XO		
LREF =	474.8000 IN.	YMRP =	.0000 IN.YO		
BREF =	936.6800 IN.	ZMRP =	375.0000 IN.ZO		
SCALE =	.0405				

PARAMETRIC DATA

BETA =	-4.000	BDFLAP =	-11.700
ELEVON =	10.000	RUDDER =	.000
SPDBRK =	25.000	GRDPLN =	.000
LNGRPS	1.000	LNDGDR =	100.000

SECTION (1)MN GR AFT WAL CPS DEPENDENT VARIABLE CP

MACH (1) = .230 ALPHA (1) = .090

X/LD	.050	.500	.950
X/LW			
.050	.1640	.0953	-.1754
.500	.0970	-.0834	-.0298
.950	.1629	.1206	-.1479

MACH (1) = .230 ALPHA (2) = 5.300

X/LD	.050	.500	.950
X/LW			
.050	.2485	.2052	-.1163
.500	.2093	.0685	.0721
.950	.1864	.1263	-.0763

MACH (1) = .230 ALPHA (3) = 10.570

X/LD	.050	.500	.950
X/LW			
.050	.3294	.2885	.1372
.500	.3856	.2370	.4511
.950	.3381	.2548	-.1390

MACH (1) = .230 ALPHA (4) = 15.810

X/LD	.050	.500	.950
X/LW			
.050	.5824	.5423	.2545
.500	.5601	.4030	.4890
.950	.5491	.4698	.0726

MACH (1) = .230 ALPHA (5) = 18.980

X/LD	.050	.500	.950
X/LW			
.050	.6786	.6542	.2500
.500	.6042	.5051	.4936
.950	.6803	.6693	.1478

NAAL 737 OA143 ORB/866-MAIN GEAR AFT WALL CPS (RFCF23) (14 MAY 75)

REFERENCE DATA

SREF =	2690.0000 SQ.FT.	XMRP =	1076.7000 IN.XO		
LREF =	474.8000 IN.	YMRP =	.0000 IN.YO		
BREF =	936.6800 IN.	ZMRP =	375.0000 IN.ZO		
SCALE =	.0405				

PARAMETRIC DATA

BETA =	-8.000	BDFLAP =	-11.700
ELEVON =	10.000	RUDDER =	.000
SPDBRK =	25.000	GRDPLN =	.000
LNGRPS =	1.000	LNDGDR =	100.000

SECTION (1)MN GR AFT WAL CPS DEPENDENT VARIABLE CP

MACH (1) = .230 ALPHA (1) = .100

X/LD	.050	.500	.950
X/LW			
.050	.1382	.0962	-.1364
.500	.0324	-.1581	-.0982
.950	.1008	-.0004	-.1988

MACH (1) = .230 ALPHA (2) = 5.320

X/LD	.050	.500	.950
X/LW			
.050	.2051	.1130	-.0945
.500	.1656	.0050	.0129
.950	.2103	.1168	-.0896

MACH (1) = .230 ALPHA (3) = 10.590

X/LD	.050	.500	.950
X/LW			
.050	.3197	.2872	-.0070
.500	.2872	.1756	.2078
.950	.2497	.2062	.0112

MACH (1) = .230 ALPHA (4) = 15.850

X/LD	.050	.500	.950
X/LW			
.050	.4496	.4124	.2311
.500	.5107	.3456	.5239
.950	.4479	.3610	-.0086

MACH (1) = .230 ALPHA (5) = 19.010

X/LD	.050	.500	.950
X/LW			
.050	.5799	.5442	.3086
.500	.6063	.4377	.5184
.950	.5558	.4676	.1323

NAAL 737 OA143 ORB/B66-MAIN GEAR AFT WALL CPS (RFCF24) (14 MAY 75)

REFERENCE DATA

SREF =	2690.0000 SQ.FT.	XMRP =	1076.7000 IN.XO		
LREF =	474.8000 IN.	YMRP =	.0000 IN.YO		
BREF =	936.6800 IN.	ZMRP =	375.0000 IN.ZO		
SCALE =	.0405				

PARAMETRIC DATA

BETA =	4.000	BDFLAP =	-11.700
ELEVON =	10.000	RUDDER =	.000
SPOBRK =	25.000	GRDPLN =	.000
LNGRPS =	1.000	LNDGDR =	100.000

SECTION (1)MN GR AFT WAL CPS DEPENDENT VARIABLE CP

MACH (1) = .230 ALPHA (1) = .070

X/LD	.050	.500	.950
X/LW			
.050	.1206	.0983	-.1090
.500	.1190	.0466	.0912
.950	.0909	.0534	-.1861

MACH (1) = .230 ALPHA (2) = 5.290

X/LD	.050	.500	.950
X/LW			
.050	.3028	.2788	.0506
.500	.3325	.1896	.2857
.950	.3144	.2185	-.1896

MACH (1) = .230 ALPHA (3) = 10.530

X/LD	.050	.500	.950
X/LW			
.050	.4906	.4647	.0240
.500	.4236	.3319	.2621
.950	.4919	.4779	-.0021

MACH (1) = .230 ALPHA (4) = 15.790

X/LD	.050	.500	.950
X/LW			
.050	.6654	.6192	.0579
.500	.5845	.4767	.3472
.950	.6505	.6442	.0937

MACH (1) = .230 ALPHA (5) = 18.950

X/LD	.050	.500	.950
X/LW			
.050	.7109	.6644	.0757
.500	.6420	.5244	.3766
.950	.6898	.6898	.1433

NAAL 737 OA143 ORB/B66-MAIN GEAR AFT WALL CPS (RFCF25) (14 MAY 75)

REFERENCE DATA

SREF =	2690.0000 SQ.FT.	XMRP =	1076.7000 IN.XO		
LREF =	474.8000 IN.	YMRP =	.0000 IN.YO		
BREF =	936.6800 IN.	ZMRP =	375.0000 IN.ZO		
SCALE =	.0405				

PARAMETRIC DATA

BETA =	8.000	BDFLAP =	-11.700
ELEVON =	10.000	RUDDER =	.000
SPDBRK =	25.000	GRDPLN =	.000
LNGRPS =	1.000	LNDGDR =	100.000

SECTION (1)MN GR AFT WAL CPS DEPENDENT VARIABLE CP

MACH (1) = .230 ALPHA (1) = .100

X/LD	.050	.500	.950
X/LW			
.050	.1573	.1253	-.0445
.500	.1968	.0780	.2010
.950	.1891	.1053	-.2488

MACH (1) = .230 ALPHA (2) = 5.310

X/LD	.050	.500	.950
X/LW			
.050	.3842	.3469	-.0509
.500	.3269	.2517	.1915
.950	.3839	.3958	-.0685

MACH (1) = .230 ALPHA (3) = 10.550

X/LD	.050	.500	.950
X/LW			
.050	.6225	.5844	-.0240
.500	.5518	.4312	.3073
.950	.6103	.6020	.0115

MACH (1) = .230 ALPHA (4) = 15.830

X/LD	.050	.500	.950
X/LW			
.050	.7207	.6769	.0071
.500	.6480	.5225	.3478
.950	.7003	.6943	.0902

MACH (1) = .230 ALPHA (5) = 18.970

X/LD	.050	.500	.950
X/LW			
.050	.7464	.7041	.0311
.500	.6796	.5587	.3492
.950	.7239	.7170	.1294

NAAL 737 OA143 ORB/B66-MAIN GEAR AFT WALL CPS (RFCF28) (14 MAY 75)

REFERENCE DATA

SREF = 2690.0000 SQ.FT. XMRP = 1076.7000 IN.XO
LREF = 474.8000 IN. YMRP = .0000 IN.YO
BREF = 936.6800 IN. ZMRP = 375.0000 IN.ZO
SCALE = .0405

PARAMETRIC DATA

BETA = 8.000 BDFLAP = -11.700
ELEVON = 10.000 RUDDER = .000
SPDBRK = 25.000 GRDPLN = .000
LNGRPS = .000 LNDGDR = .000

SECTION (1)MN GR AFT WAL CPS DEPENDENT VARIABLE CP

MACH (1) = .230 ALPHA (1) = .070

X/LD	.050	.500	.950
X/LW			
.050	-.0868	-.0874	-.0792
.500	-.0860	-.0871	-.0945
.950	-.0860	-.0877	-.0866

MACH (1) = .230 ALPHA (2) = 5.330

X/LD	.050	.500	.950
X/LW			
.050	-.0185	-.0161	-.0084
.500	-.0196	-.0166	-.0298
.950	-.0177	-.0139	-.0191

MACH (1) = .230 ALPHA (3) = 10.570

X/LD	.050	.500	.950
X/LW			
.050	.0581	.0575	.0652
.500	.0567	.0551	.0468
.950	.0564	.0551	.0545

MACH (1) = .230 ALPHA (4) = 15.850

X/LD	.050	.500	.950
X/LW			
.050	.1362	.1365	.1439
.500	.1354	.1373	.1267
.950	.1371	.1357	.1319

MACH (1) = .230 ALPHA (5) = 19.010

X/LD	.050	.500	.950
X/LW			
.050	.1826	.1834	.1930
.500	.1820	.1809	.1757
.950	.1812	.1815	.1790

NAAL 737 OA143 ORB/866-MAIN GEAR AFT WALL CPS (RFCF27) (14 MAY 75)

REFERENCE DATA

SREF =	2690.0000 SQ.FT.	XMRP =	1076.7000 IN.XO		
LREF =	474.8000 IN.	YMRP =	.0000 IN.YO		
BREF =	936.6800 IN.	ZMRP =	375.0000 IN.ZO		
SCALE =	.0405				

PARAMETRIC DATA

BETA =	8.000	BDFLAP =	-11.700
ELEVON =	10.000	RUDDER =	.000
SPDBRK =	25.000	GRDPLN =	.000
LNGRPS =	.000	LNDGDR =	40.000

SECTION (1)MN GR AFT WAL CPS DEPENDENT VARIABLE CP

MACH (1) = .230 ALPHA (1) = .080

X/LD	.050	.500	.950
X/LW			
.050	.0649	-.0335	.2697
.500	.0249	-.0653	.1040
.950	.0200	-.0171	-.0538

MACH (1) = .230 ALPHA (2) = 5.320

X/LD	.050	.500	.950
X/LW			
.050	.1731	.1558	.0519
.500	.1734	.0829	.4212
.950	.1935	.1366	.1361

MACH (1) = .230 ALPHA (3) = 10.550

X/LD	.050	.500	.950
X/LW			
.050	.4528	.3621	.1014
.500	.3819	.2357	.5025
.950	.4771	.3949	.3519

MACH (1) = .230 ALPHA (4) = 15.820

X/LD	.050	.500	.950
X/LW			
.050	.5955	.4897	.1656
.500	.4895	.3727	.5312
.950	.6002	.5268	.4565

MACH (1) = .230 ALPHA (5) = 18.970

X/LD	.050	.500	.950
X/LW			
.050	.6479	.5470	.1951
.500	.5465	.4316	.5536
.950	.6397	.5744	.5097

NAAL 737 OA143 ORB/B66-MAIN GEAR AFT WALL CPS (RFCF29) (14 MAY 75)

REFERENCE DATA

SREF =	2690.0000 SQ.FT.	XMRP =	1076.7000 IN.XO		
LREF =	474.8000 IN.	YMRP =	.0000 IN.YO		
BREF =	936.6800 IN.	ZMRP =	375.0000 IN.ZO		
SCALE =	.0405				

PARAMETRIC DATA

BETA =	8.000	BDFLAP =	-11.700
ELEVON =	10.000	RUDDER =	.000
SPDBRK =	25.000	GRDPLN =	.000
LNGRPS =	.000	LNDGDR =	80.000

SECTION (1)MN GR AFT WAL CPS DEPENDENT VARIABLE CP

MACH (1) = .230 ALPHA (1) = .090

X/LD	.050	.500	.950
X/LW			
.050	.1182	.0547	.0659
.500	.0977	-.0420	.5505
.950	.1316	.0047	.1633

MACH (1) = .230 ALPHA (2) = 5.330

X/LD	.050	.500	.950
X/LW			
.050	.2674	.2201	.0440
.500	.2338	.1337	.3500
.950	.3370	.2572	.5784

MACH (1) = .230 ALPHA (3) = 10.560

X/LD	.050	.500	.950
X/LW			
.050	.6154	.5033	.0984
.500	.5066	.3601	.4973
.950	.6206	.5177	.8895

MACH (1) = .230 ALPHA (4) = 15.810

X/LD	.050	.500	.950
X/LW			
.050	.7171	.6269	.1142
.500	.6189	.4610	.5845
.950	.6992	.5985	.8937

MACH (1) = .230 ALPHA (5) = 18.970

X/LD	.050	.500	.950
X/LW			
.050	.7566	.6679	.1118
.500	.6591	.4965	.5709
.950	.7349	.6327	.8912

NAAL 737 OA143 ORB/B66-MAIN GEAR AFT WALL CPS (RFCF30) (14 MAY 75)

REFERENCE DATA

SREF =	2690.0000 SQ.FT.	XMRP =	1076.7000 IN.XO
LREF =	474.8000 IN.	YMRP =	.0000 IN.YO
BREF =	936.6800 IN.	ZMRP =	375.0000 IN.ZO
SCALE =	.0405		

PARAMETRIC DATA

BETA =	.000	BDFLAP =	-11.700
ELEVON =	5.000	RUDDER =	.000
SPDBRK =	25.000	GRDPLN =	.000
LNGRPS =	1.000	LNDGDR =	100.000

SECTION (1)MN GR AFT WAL CPS DEPENDENT VARIABLE CP

MACH (1) = .230 ALPHA (1) = .010

X/LD	.050	.500	.950
X/LW			
.050	.1643	.1298	-.2425
.500	.1024	-.0344	-.0437
.950	.1479	.0876	-.1778

MACH (1) = .230 ALPHA (2) = 5.240

X/LD	.050	.500	.950
X/LW			
.050	.1926	.1519	-.0102
.500	.2190	.1208	.2942
.950	.1942	.1328	-.2310

MACH (1) = .230 ALPHA (3) = 10.470

X/LD	.050	.500	.950
X/LW			
.050	.4562	.4221	.1432
.500	.4741	.2809	.4058
.950	.4210	.3109	-.0841

MACH (1) = .230 ALPHA (4) = 15.730

X/LD	.050	.500	.950
X/LW			
.050	.6460	.6211	.1636
.500	.5605	.4522	.4372
.950	.6421	.6219	.0747

MACH (1) = .230 ALPHA (5) = 18.890

X/LD	.050	.500	.950
X/LW			
.050	.7170	.6833	.1590
.500	.6322	.5309	.4467
.950	.6976	.6872	.1596

NAAL 737 OA143 ORB/B66-MAIN GEAR AFT WALL CPS (RFCF31) (14 MAY 75)

REFERENCE DATA

SREF =	2690.0000 SQ.FT.	XMRP =	1076.7000 IN.XO		
LREF =	474.8000 IN.	YMRP =	.0000 IN.YO		
BREF =	936.6800 IN.	ZMRP =	375.0000 IN.ZO		
SCALE =	.0405				

PARAMETRIC DATA

BETA =	-4.000	BDFLAP =	-11.700
ELEVON =	5.000	RUDDER =	.000
SPDBRK =	25.000	GRDPLN =	.000
LNGRPS =	1.000	LNDGOR =	100.000

SECTION (1)MN GR AFT WAL CPS DEPENDENT VARIABLE CP

MACH (1) = .230 ALPHA (1) = .000

X/LD	.050	.500	.950
X/LW			
.050	.1553	.0997	-.1913
.500	.0770	-.0815	-.0478
.950	.1512	.1123	-.1650

MACH (1) = .230 ALPHA (2) = 5.250

X/LD	.050	.500	.950
X/LW			
.050	.2424	.1999	-.1501
.500	.1947	.0534	.0427
.950	.1900	.1204	-.0910

MACH (1) = .230 ALPHA (3) = 10.480

X/LD	.050	.500	.950
X/LW			
.050	.3102	.2661	.1077
.500	.3638	.2209	.4385
.950	.3249	.2396	-.1374

MACH (1) = .230 ALPHA (4) = 15.760

X/LD	.050	.500	.950
X/LW			
.050	.5581	.5207	.2410
.500	.5554	.3814	.4731
.950	.5229	.4310	.0648

MACH (1) = .230 ALPHA (5) = 18.910

X/LD	.050	.500	.950
X/LW			
.050	.6544	.6310	.2421
.500	.5887	.4952	.4884
.950	.6709	.6591	.1417

NAAL 737 OA143 ORB/B66-MAIN GEAR AFT WALL CPS (RFCF32) (14 MAY 75)

REFERENCE DATA

SREF =	2690.0000 SQ.FT.	XMRP =	1076.7000 IN.XO
LREF =	474.8000 IN.	YMRP =	.0000 IN.YO
BREF =	936.6800 IN.	ZMRP =	375.0000 IN.ZO
SCALE =	.0405		

PARAMETRIC DATA

BETA =	-8.000	BDFLAP =	-11.700
ELEVON =	5.000	RUDDER =	.000
SPDBRK =	25.000	GRDPLN =	.000
LNGRPS =	1.000	LNDGDR =	100.000

SECTION (1)MN GR AFT WAL CPS DEPENDENT VARIABLE CP

MACH (1) = .230 ALPHA (1) = .050

X/LD	.050	.500	.950
X/LW			
.050	.1333	.1437	-.1674
.500	.0099	-.1770	-.1236
.950	.0813	-.0152	-.2172

MACH (1) = .230 ALPHA (2) = 5.250

X/LD	.050	.500	.950
X/LW			
.050	.2113	.1102	-.1163
.500	.1447	-.0106	-.0062
.950	.2005	.1507	-.1007

MACH (1) = .230 ALPHA (3) = 10.520

X/LD	.050	.500	.950
X/LW			
.050	.3097	.2753	-.0487
.500	.2769	.1542	.1706
.950	.2429	.1920	-.0070

MACH (1) = .230 ALPHA (4) = 15.790

X/LD	.050	.500	.950
X/LW			
.050	.4315	.3936	.2113
.500	.4926	.3315	.5196
.950	.4401	.3461	-.0174

MACH (1) = .230 ALPHA (5) = 18.960

X/LD	.050	.500	.950
X/LW			
.050	.5552	.5256	.2930
.500	.5933	.4263	.5094
.950	.5384	.4447	.1261

NAAL 737 OA143 ORB/B66-MAIN GEAR AFT WALL CPS (RFCF33) (14 MAY 75)

REFERENCE DATA

SREF =	2690.0000 SQ.FT.	XMRP =	1076.7000 IN.XO		
LREF =	474.8000 IN.	YMRP =	.0000 IN.YO		
BREF =	936.6800 IN.	ZMRP =	375.0000 IN.ZO		
SCALE =	.0405				

PARAMETRIC DATA

BETA =	4.000	BDFLAP =	-11.700
ELEVON =	5.000	RUDDER =	.000
SPDBRK =	25.000	GRDPLN =	.000
LNGRPS =	1.000	LNDGDR =	100.000

SECTION (1)MN GR AFT WAL CPS DEPENDENT VARIABLE CP

MACH (1) = .230 ALPHA (1) = .010

X/LD	.050	.500	.950
X/LW			
.050	.1144	.0927	-.1481
.500	.1078	.0245	.0624
.950	.0776	.0426	-.1968

MACH (1) = .230 ALPHA (2) = 5.230

X/LD	.050	.500	.950
X/LW			
.050	.2853	.2563	.0389
.500	.3247	.1744	.2800
.950	.2977	.1943	-.1981

MACH (1) = .230 ALPHA (3) = 10.470

X/LD	.050	.500	.950
X/LW			
.050	.4680	.4344	.0066
.500	.3981	.3122	.2429
.950	.4760	.4614	-.0010

MACH (1) = .230 ALPHA (4) = 15.750

X/LD	.050	.500	.950
X/LW			
.050	.6596	.6118	.0440
.500	.5727	.4706	.3386
.950	.6434	.6349	.1074

MACH (1) = .230 ALPHA (5) = 18.910

X/LD	.050	.500	.950
X/LW			
.050	.7075	.6594	.0663
.500	.6300	.5217	.3711
.950	.6959	.6888	.1673

NAAL 737 OA143 ORB/B66-MAIN GEAR AFT WALL CPS (RFCF34) (14 MAY 75)

REFERENCE DATA

SREF =	2690.0000 SQ.FT.	XMRP =	1076.7000 IN.XO		
LREF =	474.8000 IN.	YMRP =	.0000 IN.YO		
BREF =	936.6800 IN.	ZMRP =	375.0000 IN.ZO		
SCALE =	.0405				

PARAMETRIC DATA

BETA =	8.000	BDFLAP =	-11.700
ELEVON =	5.000	RUDDER =	.000
SPDBRK =	25.000	GROPLN =	.000
LNGRPS =	1.000	LNDGDR =	100.000

SECTION (1)MN GR AFT WAL CPS DEPENDENT VARIABLE CP

MACH (1) = .230 ALPHA (1) = -4.170

X/LD	.050	.500	.950
X/LW			
.050	.0645	.0364	-.1822
.500	.0618	-.0182	.0481
.950	.0372	-.0010	-.2710

MACH (1) = .230 ALPHA (2) = -2.060

X/LD	.050	.500	.950
X/LW			
.050	.0990	.0612	-.1107
.500	.1231	.0233	.1500
.950	.1133	.0444	-.3149

MACH (1) = .230 ALPHA (3) = .020

X/LD	.050	.500	.950
X/LW			
.050	.1466	.1157	-.0612
.500	.1801	.0673	.1792
.950	.1784	.0952	-.2726

MACH (1) = .230 ALPHA (4) = 2.090

X/LD	.050	.500	.950
X/LW			
.050	.2189	.2040	-.0237
.500	.2429	.1271	.2057
.950	.2203	.1477	-.2072

MACH (1) = .230 ALPHA (5) = 4.170

X/LD	.050	.500	.950
X/LW			
.050	.2925	.2826	-.0106
.500	.2627	.1896	.1665
.950	.3209	.3110	-.1420

MACH (1) = .230 ALPHA (6) = 6.270

X/LD	.050	.500	.950
X/LW			
.050	.4482	.4172	-.0655
.500	.3824	.3014	.2325
.950	.4526	.4457	-.0554

MACH (1) = .230 ALPHA (7) = 8.370

X/LD	.050	.500	.950
X/LW			
.050	.5672	.5251	-.0436
.500	.4931	.3869	.2760
.950	.5553	.5460	-.0196

NAAL 737 OA143 ORB/B66-MAIN GEAR AFT WALL CPS (RFCF34)

SECTION (1)MN GR AFT WAL CPS DEPENDENT VARIABLE CP

MACH (1) = .230 ALPHA (8) = 10.470

X/LD	.050	.500	.950
X/LW			
.050	.6543	.6033	-.0333
.500	.5705	.4450	.3014
.950	.6292	.6190	.0298

MACH (1) = .230 ALPHA (9) = 12.570

X/LD	.050	.500	.950
X/LW			
.050	.6891	.6459	-.0223
.500	.6033	.4831	.3359
.950	.6759	.6654	.0888

MACH (1) = .230 ALPHA (10) = 14.650

X/LD	.050	.500	.950
X/LW			
.050	.7106	.6655	-.0078
.500	.6298	.5078	.3382
.950	.6919	.6891	.1228

MACH (1) = .230 ALPHA (11) = 16.770

X/LD	.050	.500	.950
X/LW			
.050	.7248	.6837	.0118
.500	.6501	.5278	.3545
.950	.7099	.7127	.1631

MACH (1) = .230 ALPHA (12) = 18.880

X/LD	.050	.500	.950
X/LW			
.050	.7424	.6999	.0185
.500	.6727	.5481	.3440
.950	.7251	.7171	.1920

NAAL 737 OA143 ORB/B65-MAIN GEAR AFT WALL CPS (RFCF35) (14 MAY 75)

REFERENCE DATA

SREF =	2690.0000 SQ.FT.	XMRP =	1076.7000 IN.XO		
LREF =	474.8000 IN.	YMRP =	.0000 IN.YO		
BREF =	936.6800 IN.	ZMRP =	375.0000 IN.ZO		
SCALE =	.0405				

PARAMETRIC DATA

BETA =	.000	BDFLAP =	-11.700
ELEVON =	5.000	RUDDER =	.000
SPDBRK =	25.000	GRDPLN =	.000
LNGRPS =	1.000	LNDGDR =	100.000

SECTION (1)MN GR AFT WAL CPS DEPENDENT VARIABLE CP

MACH (1) = .230 ALPHA (1) = .030

X/LD	.050	.500	.950
X/LW			
.050	.1652	.1268	-.2409
.500	.1077	-.0360	-.0462
.950	.1457	.0940	-.1746

MACH (1) = .230 ALPHA (2) = 5.230

X/LD	.050	.500	.950
X/LW			
.050	.1901	.1509	-.0083
.500	.2110	.1160	.2923
.950	.2008	.1340	-.2261

MACH (1) = .230 ALPHA (3) = 10.470

X/LD	.050	.500	.950
X/LW			
.050	.4530	.4164	.1466
.500	.4753	.2831	.3938
.950	.4175	.3103	-.0860

MACH (1) = .230 ALPHA (4) = 15.750

X/LD	.050	.500	.950
X/LW			
.050	.6448	.6156	.1570
.500	.5580	.4550	.4250
.950	.6434	.6291	.0859

MACH (1) = .230 ALPHA (5) = 18.910

X/LD	.050	.500	.950
X/LW			
.050	.7171	.6843	.1511
.500	.6324	.5294	.4446
.950	.7008	.6799	.1832

NAAL 737 OA143 ORB/B65-MAIN GEAR AFT WALL CPS (RFCF36) (14 MAY 75)

REFERENCE DATA

SREF = 2690.0000 SQ.FT. XMRP = 1076.7000 IN.XO
LREF = 474.8000 IN. YMRP = .0000 IN.YO
BREF = 936.6800 IN. ZMRP = 375.0000 IN.ZO
SCALE = .0405

PARAMETRIC DATA

BETA = -4.000 BDFLAP = -11.700
ELEVON = 5.000 RUDDER = .000
SPDBRK = 25.000 GRDPLN = .000
LNGRPS = 1.000 LNDGDR = 100.000

SECTION (1)MN GR AFT WAL CPS DEPENDENT VARIABLE CP

MACH (1) = .230 ALPHA (1) = .000

X/LD	.050	.500	.950
X/LW			
.050	.1538	.1006	-.2027
.500	.0784	-.0914	-.0544
.950	.1513	.1083	-.1545

MACH (1) = .230 ALPHA (2) = 5.260

X/LD	.050	.500	.950
X/LW			
.050	.2391	.1968	-.1529
.500	.1932	.0508	.0529
.950	.1838	.1166	-.0940

MACH (1) = .230 ALPHA (3) = 10.490

X/LD	.050	.500	.950
X/LW			
.050	.3126	.2651	.1098
.500	.3600	.2194	.4342
.950	.3220	.2370	-.1728

MACH (1) = .230 ALPHA (4) = 15.770

X/LD	.050	.500	.950
X/LW			
.050	.5505	.5126	.2331
.500	.5530	.3774	.4578
.950	.5217	.4226	.0787

MACH (1) = .230 ALPHA (5) = 18.920

X/LD	.050	.500	.950
X/LW			
.050	.6601	.6340	.2414
.500	.5841	.4868	.4715
.950	.6683	.6455	.1566

NAAL 737 OA143 ORB/865-MAIN GEAR AFT WALL CPS (RFCF37) (14 MAY 75)

REFERENCE DATA

SREF =	2690.0000 SQ.FT.	XMRP =	1076.7000 IN.XO		
LREF =	474.8000 IN.	YMRP =	.0000 IN.YO		
BREF =	936.6800 IN.	ZMRP =	375.0000 IN.ZO		
SCALE =	.0405				

PARAMETRIC DATA

BETA =	-8.000	BDFLAP =	-11.700
ELEVON =	5.000	RUDDER =	.000
SPDBRK =	25.000	GRDPLN =	.000
LNGRPS =	1.000	LNDGDR =	100.000

SECTION (1)MN GR AFT WAL CPS DEPENDENT VARIABLE CP

MACH (1) = .230 ALPHA (1) = .030

X/LD	.050	.500	.950
X/LW			
.050	.1334	.1375	-.1532
.500	.0107	-.1760	-.1253
.950	.0813	-.0191	-.2137

MACH (1) = .230 ALPHA (2) = 5.250

X/LD	.050	.500	.950
X/LW			
.050	.2076	.1518	-.1286
.500	.1452	-.0130	-.0100
.950	.2134	.1008	-.0960

MACH (1) = .230 ALPHA (3) = 10.510

X/LD	.050	.500	.950
X/LW			
.050	.3130	.2785	-.0443
.500	.2760	.1534	.1847
.950	.2401	.1891	-.0163

MACH (1) = .230 ALPHA (4) = 15.790

X/LD	.050	.500	.950
X/LW			
.050	.4327	.3884	.2096
.500	.4842	.3334	.5117
.950	.4311	.3422	-.0357

MACH (1) = .230 ALPHA (5) = 18.950

X/LD	.050	.500	.950
X/LW			
.050	.5549	.5230	.2936
.500	.5950	.4281	.5012
.950	.5331	.4405	.1330

NAAL 737 OA143 ORB/B65-MAIN GEAR AFT WALL CPS (RFCF38) (14 MAY 75)

REFERENCE DATA

SREF =	2690.0000 SQ.FT.	XMRP =	1076.7000 IN.XO		
LREF =	474.8000 IN.	YMRP =	.0000 IN.YO		
BREF =	936.6800 IN.	ZMRP =	375.0000 IN.ZO		
SCALE =	.0405				

PARAMETRIC DATA

BETA =	4.000	BDFLAP =	-11.700
ELEVON =	5.000	RUDDER =	.000
SPDBRK =	25.000	GRDPLN =	.000
LNGRPS =	1.000	LNDGDR =	100.000

SECTION (1)MN GR AFT WAL CPS DEPENDENT VARIABLE CP

MACH (1) = .230 ALPHA (1) = .010

X/LD	.050	.500	.950
X/LW			
.050	.1114	.0904	-.1359
.500	.1054	.0268	.0728
.950	.0791	.0397	-.2082

MACH (1) = .230 ALPHA (2) = 5.240

X/LD	.050	.500	.950
X/LW			
.050	.2823	.2560	.0363
.500	.3321	.1725	.2671
.950	.3003	.1921	-.2031

MACH (1) = .230 ALPHA (3) = 10.090

X/LD	.050	.500	.950
X/LW			
.050	.7094	.6628	.0652
.500	.6335	.5243	.3643
.950	.7003	.6951	.1916

MACH (1) = .230 ALPHA (4) = 10.460

X/LD	.050	.500	.950
X/LW			
.050	.4689	.4382	.0074
.500	.3983	.3167	.2378
.950	.4807	.4683	.0189

MACH (1) = .230 ALPHA (5) = 15.730

X/LD	.050	.500	.950
X/LW			
.050	.6551	.6163	.0432
.500	.5749	.4551	.3362
.950	.6419	.6350	.1305

NAAL 737 OA143 ORB/B65-MAIN GEAR AFT WALL CPS (RFCF39) (14 MAY 75)

REFERENCE DATA

SREF =	2690.0000 SQ.FT.	XMRP =	1076.7000 IN.XO		
LREF =	474.8000 IN.	YMRP =	.0000 IN.YO		
BREF =	936.6800 IN.	ZMRP =	375.0000 IN.ZO		
SCALE =	.0405				

PARAMETRIC DATA

BETA =	8.000	BDFLAP =	-11.700
ELEVON =	5.000	RUDDER =	.000
SPDBRK =	25.000	GRDPLN =	.000
LNGRPS =	1.000	LNDGDR =	100.000

SECTION (1)MN GR AFT WAL CPS DEPENDENT VARIABLE CP

MACH (1) = .230 ALPHA (1) = .020

X/LD	.050	.500	.950
X/LW			
.050	.1415	.1135	-.0643
.500	.1807	.0672	.1755
.950	.1692	.0957	-.2672

MACH (1) = .230 ALPHA (2) = 5.250

X/LD	.050	.500	.950
X/LW			
.050	.3603	.3317	-.0628
.500	.3022	.2395	.1811
.950	.3747	.3769	-.0625

MACH (1) = .230 ALPHA (3) = 10.460

X/LD	.050	.500	.950
X/LW			
.050	.6504	.6050	-.0398
.500	.5651	.4433	.3022
.950	.6309	.6190	.0454

MACH (1) = .230 ALPHA (4) = 15.740

X/LD	.050	.500	.950
X/LW			
.050	.7172	.6753	-.0018
.500	.6404	.5191	.3463
.950	.7018	.6965	.1527

MACH (1) = .230 ALPHA (5) = 18.890

X/LD	.050	.500	.950
X/LW			
.050	.7427	.7000	.0243
.500	.6742	.5515	.3509
.950	.7289	.7234	.1955

NAAL 737 OA143 ORB/B67-MAIN GEAR AFT WALL CPS (RFCF56) (14 MAY 75)

REFERENCE DATA

SREF =	2690.0000 SQ.FT.	XMRP =	1076.7000 IN.XO		
LREF =	474.8000 IN.	YMRP =	.0000 IN.YO		
BREF =	936.6800 IN.	ZMRP =	375.0000 IN.ZO		
SCALE =	.0405				

PARAMETRIC DATA

BETA =	.000	BDFLAP =	-11.700
ELEVON =	5.000	RUDDER =	.000
SPDBRK =	25.000	GRDPLN =	.000
LNGRPS =	1.000	LNDGDR =	100.000

SECTION (1)MN GR AFT WAL CPS DEPENDENT VARIABLE CP

MACH (1) = .230 ALPHA (1) = -4.160

X/LD	.050	.500	.950
X/LW			
.050	.0982	.0484	-.2675
.500	.0268	-.1254	-.1322
.950	.1058	.0831	-.2123

MACH (1) = .230 ALPHA (2) = -2.080

X/LD	.050	.500	.950
X/LW			
.050	.1408	.0972	-.2557
.500	.0678	-.0811	-.1066
.950	.1381	.1027	-.2019

MACH (1) = .230 ALPHA (3) = .020

X/LD	.050	.500	.950
X/LW			
.050	.1658	.1337	-.2444
.500	.1037	-.0353	-.0474
.950	.1441	.0980	-.1816

MACH (1) = .230 ALPHA (4) = 2.110

X/LD	.050	.500	.950
X/LW			
.050	.1843	.1568	-.1474
.500	.1445	.0230	.0216
.950	.1256	.0753	-.1545

MACH (1) = .230 ALPHA (5) = 4.200

X/LD	.050	.500	.950
X/LW			
.050	.1734	.1460	-.0764
.500	.1739	.0812	.1783
.950	.1441	.0984	-.1667

MACH (1) = .230 ALPHA (6) = 6.290

X/LD	.050	.500	.950
X/LW			
.050	.2198	.1845	.0173
.500	.2810	.1486	.3402
.950	.2410	.1620	-.2634

MACH (1) = .230 ALPHA (7) = 8.400

X/LD	.050	.500	.950
X/LW			
.050	.3344	.3105	.0879
.500	.4048	.2157	.3773
.950	.3308	.2261	-.2207

NAAL 737 OA143 ORB/B67-MAIN GEAR AFT WALL CPS (RFCF56)

SECTION (1)MN GR AFT WAL CPS DEPENDENT VARIABLE CP

MACH (1) = .230 ALPHA (8) = 10.490

X/LD	.050	.500	.950
X/LW			
.050	.4556	.4132	.1294
.500	.4573	.2757	.3903
.950	.4206	.3146	-.1006

MACH (1) = .230 ALPHA (9) = 12.590

X/LD	.050	.500	.950
X/LW			
.050	.5477	.5223	.1756
.500	.5058	.3634	.4012
.950	.5394	.4557	-.0242

MACH (1) = .230 ALPHA (10) = 14.700

X/LD	.050	.500	.950
X/LW			
.050	.6112	.5792	.1561
.500	.5287	.4240	.4063
.950	.6159	.6001	.0460

MACH (1) = .230 ALPHA (11) = 16.800

X/LD	.050	.500	.950
X/LW			
.050	.6705	.6404	.1421
.500	.5801	.4803	.4092
.950	.6608	.6407	.1169

MACH (1) = .230 ALPHA (12) = 18.910

X/LD	.050	.500	.950
X/LW			
.050	.7077	.6720	.1396
.500	.6286	.5290	.4238
.950	.6890	.6803	.1836

NAAL 737 OA143 ORB/B67-MAIN GEAR AFT WALL CPS (RFCF60) (14 MAY 75)

REFERENCE DATA

SREF =	2690.0000 SQ.FT.	XMRP =	1076.7000 IN.XO		
LREF =	474.8000 IN.	YMRP =	.0000 IN.YO		
BREF =	936.6800 IN.	ZMRP =	375.0000 IN.ZO		
SCALE =	.0405				

PARAMETRIC DATA

BETA =	8.000	BDFLAP =	-11.700
ELEVON =	5.000	RUDDER =	.000
SPDBRK =	25.000	GRDPLN =	.000
LNGRPS =	1.000	LNDGDR =	100.000

SECTION (1)MN GR AFT WAL CPS DEPENDENT VARIABLE CP

MACH (1) = .230 ALPHA (1) = -4.130

X/LD	.050	.500	.950
X/LW			
.050	.0644	.0397	-.1897
.500	.0649	-.0191	.0534
.950	.0392	-.0037	-.2686

MACH (1) = .230 ALPHA (2) = -2.050

X/LD	.050	.500	.950
X/LW			
.050	.0904	.0578	-.1179
.500	.1197	.0217	.1397
.950	.1085	.0416	-.3086

MACH (1) = .230 ALPHA (3) = .020

X/LD	.050	.500	.950
X/LW			
.050	.1424	.1128	-.0657
.500	.1825	.0686	.1767
.950	.1701	.0908	-.2869

MACH (1) = .230 ALPHA (4) = 2.120

X/LD	.050	.500	.950
X/LW			
.050	.2173	.1949	-.0336
.500	.2427	.1225	.2043
.950	.2225	.1408	-.2199

MACH (1) = .230 ALPHA (5) = 4.180

X/LD	.050	.500	.950
X/LW			
.050	.2776	-.0194	.1908
.500	.2931	-.7087	-.1294
.950	.2619	.3169	.3061

MACH (1) = .230 ALPHA (6) = 6.290

X/LD	.050	.500	.950
X/LW			
.050	.4087	-.0696	.2972
.500	.4416	-.7090	-.0337
.950	.3807	.4482	.4388

MACH (1) = .230 ALPHA (7) = 8.380

X/LD	.050	.500	.950
X/LW			
.050	.5186	-.0621	.3793
.500	.5595	-.7090	.0091
.950	.4858	.5498	.5393

NAAL 737 OA143 ORB/867-MAIN GEAR AFT WALL CPS (RFCF60)

SECTION (1)MN GR AFT WAL CPS DEPENDENT VARIABLE CP

MACH (1) = .230 ALPHA (8) = 9.020

X/LD	.050	.500	.950
X/LW			
.050	.7239	.6802	-.0054
.500	.6475	.5217	.3333
.950	.7056	.7040	.1712

MACH (1) = .230 ALPHA (9) = 10.480

X/LD	.050	.500	.950
X/LW			
.050	.6451	.5943	-.0489
.500	.5592	.4378	.2918
.950	.6304	.6136	.0507

MACH (1) = .230 ALPHA (10) = 12.590

X/LD	.050	.500	.950
X/LW			
.050	.6858	.6411	-.0314
.500	.6016	.4780	.3166
.950	.6695	.6609	.1082

MACH (1) = .230 ALPHA (11) = 14.680

X/LD	.050	.500	.950
X/LW			
.050	.7083	.6564	-.0193
.500	.6252	.5012	.3257
.950	.6937	.6879	.1360

MACH (1) = .230 ALPHA (12) = 18.890

X/LD	.050	.500	.950
X/LW			
.050	.7379	.6960	.0181
.500	.6697	.5509	.3388
.950	.7205	.7164	.1999

NAAL 737 OA143 ORB/B66-MAIN GEAR LT SDWALL CPS (RFCG01) (14 MAY 75)

REFERENCE DATA

SREF =	2690.0000 SQ.FT.	XMRP =	1076.7000 IN.XO		
LREF =	474.8000 IN.	YMRP =	.0000 IN.YO		
BREF =	936.6800 IN.	ZMRP =	375.0000 IN.ZO		
SCALE =	.0405				

PARAMETRIC DATA

BETA =	.000	BDFLAP =	-11.700
ELEVON =	5.000	RUDDER =	.000
SPDBRK =	25.000	GRDPLN =	1.000
LNGRPS =	1.000	LNDGDR =	100.000

SECTION (1)MN GR LT SWAL CPS DEPENDENT VARIABLE CP

MACH (1) = .200 ALPHA (1) = .010

X/L	.050	.250	.500	.750	.950
X/LD					
.050	-.0173	-.0845	-.0622	-.0730	.1031
.500	-.0311	-.0799	-.1018	-.1192	-.0121
.950	-.0215	-.0618	-.1009	-.1107	-.1885

MACH (1) = .200 ALPHA (2) = 5.380

X/L	.050	.250	.500	.750	.950
X/LD					
.050	.2574	.1861	.1895	.1428	.3114
.500	.2316	.1866	.1740	.1421	.1070
.950	.2274	.1957	.1928	.1990	.3053

MACH (1) = .200 ALPHA (3) = 10.710

X/L	.050	.250	.500	.750	.950
X/LD					
.050	.3946	.3767	.3709	.3916	.6290
.500	.3929	.3755	.3260	.3774	.5570
.950	.3601	.3854	.3946	.3825	.3815

MACH (1) = .200 ALPHA (4) = 16.140

X/L	.050	.250	.500	.750	.950
X/LD					
.050	.5467	.5714	.5508	.5558	.7229
.500	.5298	.5274	.4692	.5451	.6768
.950	.6127	.5611	.5661	.5174	.5252

MACH (1) = .200 ALPHA (5) = 19.380

X/L	.050	.250	.500	.750	.950
X/LD					
.050	.6415	.6955	.6259	.6741	.7628
.500	.6050	.6132	.5522	.6262	.7263
.950	.7205	.6550	.6501	.5928	.6132

NAAL 737 OA143 ORB/B66-MAIN GEAR LT SDWALL CPS (RFCG02) (14 MAY 75)

REFERENCE DATA

SREF =	2690.0000 SQ.FT.	XMRP =	1076.7000 IN.XO
LREF =	474.8000 IN.	YMRP =	.0000 IN.YO
BREF =	936.6800 IN.	ZMRP =	375.0000 IN.ZO
SCALE =	.0405		

PARAMETRIC DATA

BETA =	-4.000	BDFLAP =	-11.700
ELEVON =	5.000	RUDDER =	.000
SPDBRK =	25.000	GRDPLN =	1.000
LNGRPS =	1.000	LNDGDR =	100.000

SECTION (1)MN GR LT SWAL CPS DEPENDENT VARIABLE CP

MACH (1) = .200 ALPHA (1) = .010

X/L	.050	.250	.500	.750	.950
X/LD					
.050	-.0910	-.1703	-.1111	-.0762	.2038
.500	-.1195	-.1422	-.1334	-.1768	.0881
.950	-.1078	-.1334	-.1791	-.1979	-.1335

MACH (1) = .200 ALPHA (2) = 5.370

X/L	.050	.250	.500	.750	.950
X/LD					
.050	.1769	.1482	.1373	.1349	.2306
.500	.1769	.1373	.1290	.1186	.1404
.950	.1840	.1478	.1315	.1264	-.0073

MACH (1) = .200 ALPHA (3) = 10.760

X/L	.050	.250	.500	.750	.950
X/LD					
.050	.4523	.3787	.3970	.3325	.5416
.500	.4286	.3758	.3766	.3407	.3509
.950	.4136	.3775	.3812	.4001	.5586

MACH (1) = .200 ALPHA (4) = 16.150

X/L	.050	.250	.500	.750	.950
X/LD					
.050	.5586	.5516	.5677	.5903	.7410
.500	.5586	.5438	.5110	.5685	.6997
.950	.5274	.5664	.5705	.5605	.5457

MACH (1) = .200 ALPHA (5) = 19.360

X/L	.050	.250	.500	.750	.950
X/LD					
.050	.6496	.6713	.6574	.6886	.7999
.500	.6365	.6365	.6016	.6638	.7657
.950	.7172	.6680	.6709	.6501	.6196

NAAL 737 OA143 ORB/B66-MAIN GEAR LT SDWALL CPS (RFCG03) (14 MAY 75)

REFERENCE DATA

SREF = 2690.0000 SQ.FT. XMRP = 1076.7000 IN.XO
LREF = 474.8000 IN. YMRP = .0000 IN.YO
BREF = 936.6800 IN. ZMRP = 375.0000 IN.ZO
SCALE = .0405

PARAMETRIC DATA

BETA = -8.000 BDFLAP = -11.700
ELEVON = 5.000 RUDDER = .000
SPDBRK = 25.000 GRDPLN = 1.000
LNGRPS = 1.000 LNDGDR = 100.000

SECTION (1)MN GR LT SWAL CPS DEPENDENT VARIABLE CP

MACH (1) = .200 ALPHA (1) = .030

X/L	.050	.250	.500	.750	.950
X/LD					
.050	-.2768	-.3321	-.2906	-.1168	.2072
.500	-.2986	-.3325	-.3011	-.3070	.1891
.950	-.2604	-.3158	-.3694	-.3351	-.1894

MACH (1) = .200 ALPHA (2) = 5.380

X/L	.050	.250	.500	.750	.950
X/LD					
.050	.1476	.0752	.0950	.0980	.3110
.500	.1347	.0806	.0460	.0463	.1583
.950	.1414	.0981	.0515	.0528	.0195

MACH (1) = .200 ALPHA (3) = 10.760

X/L	.050	.250	.500	.750	.950
X/LD					
.050	.4046	.3475	.3379	.3296	.4386
.500	.3848	.3454	.3355	.3214	.2984
.950	.3881	.3574	.3466	.3441	.3465

MACH (1) = .200 ALPHA (4) = 16.170

X/L	.050	.250	.500	.750	.950
X/LD					
.050	.5889	.5467	.5380	.5482	.7207
.500	.5732	.5492	.5181	.5397	.6632
.950	.5591	.5550	.5496	.5668	.5912

MACH (1) = .200 ALPHA (5) = 19.400

X/L	.050	.250	.500	.750	.950
X/LD					
.050	.6498	.6391	.6473	.6661	.7922
.500	.6477	.6329	.6066	.6496	.7562
.950	.6268	.6502	.6506	.6520	.6412

NAAL 737 OA143 ORB/B66-MAIN GEAR LT SDWALL CPS (RFC004) (14 MAY 75)

REFERENCE DATA

SREF = 2690.0000 SQ.FT. XMRP = 1076.7000 IN.XO
LREF = 474.8000 IN. YMRP = .0000 IN.YO
BREF = 936.6800 IN. ZMRP = 375.0000 IN.ZO
SCALE = .0405

PARAMETRIC DATA

BETA = 4.000 BDFLAP = -11.700
ELEVON = 5.000 RUDDER = .000
SPDBRK = 25.000 GRDPLN = 1.000
LNGRPS = 1.000 LNDGDR = 100.000

SECTION (1)MN GR LT SWAL CPS DEPENDENT VARIABLE CP

MACH (1) = .200 ALPHA (1) = .000

X/L	.050	.250	.500	.750	.950
X/LD					
.050	.0424	-.0080	-.0293	-.0422	.1013
.500	.0215	-.0180	-.0348	-.0568	-.0635
.950	.0269	-.0088	-.0210	-.0236	-.0845

MACH (1) = .200 ALPHA (2) = 5.340

X/L	.050	.250	.500	.750	.950
X/LD					
.050	.2122	.1938	.1780	.1828	.4310
.500	.2072	.1942	.1546	.1835	.3591
.950	.1934	.1980	.2059	.1907	.1709

MACH (1) = .200 ALPHA (3) = 10.730

X/L	.050	.250	.500	.750	.950
X/LD					
.050	.3990	.4264	.4222	.4332	.6131
.500	.3861	.3861	.3230	.4084	.5670
.950	.4546	.4256	.4376	.3742	.3541

MACH (1) = .200 ALPHA (4) = 16.140

X/L	.050	.250	.500	.750	.950
X/LD					
.050	.5799	.6847	.5613	.6601	.7205
.500	.5374	.5489	.4763	.5588	.6847
.950	.6835	.6063	.6063	.5217	.5197

MACH (1) = .200 ALPHA (5) = 19.370

X/L	.050	.250	.500	.750	.950
X/LD					
.050	.6775	.7739	.6333	.7420	.7641
.500	.5882	.6155	.5500	.6357	.7366
.950	.7915	.6751	.6837	.5989	.6036

NAAL 737 OA143 ORB/B66-MAIN GEAR LT SDWALL CPS (RFCG05) (14 MAY 75)

REFERENCE DATA

SREF =	2690.0000 SQ.FT.	XMRP =	1076.7000 IN.XO
LREF =	474.8000 IN.	YMRP =	.0000 IN.YO
BREF =	936.6800 IN.	ZMRP =	375.0000 IN.ZO
SCALE =	.0405		

PARAMETRIC DATA

BETA =	8.000	BDFLAP =	-11.700
ELEVON =	5.000	RUDDER =	.000
SPDBRK =	25.000	GRDPLN =	1.000
LNGRPS =	1.000	LNDGDR =	100.000

SECTION (1)MN GR LT SWAL CPS DEPENDENT VARIABLE CP

MACH (1) = .200 ALPHA (1) = .030

X/L	.050	.250	.500	.750	.950
X/LD I=					
.050	.0660	.0115	.0007	-.0330	.1487
.500	.0444	.0065	-.0109	-.0377	-.0107
.950	.0427	.0144	.0069	.0072	.0467

MACH (1) = .200 ALPHA (2) = 5.360

X/L	.050	.250	.500	.750	.950
X/LD					
.050	.2629	.2883	.3000	.3456	.5579
.500	.2558	.2546	.1716	.2996	.4795
.950	.2700	.3071	.3234	.2594	.2035

MACH (1) = .200 ALPHA (3) = 10.770

X/L	.050	.250	.500	.750	.950
X/LD					
.050	.4496	.4777	.4450	.4625	.6773
.500	.4168	.4118	.3202	.4462	.6004
.950	.5341	.5038	.4922	.3886	.3666

MACH (1) = .200 ALPHA (4) = 16.160

X/L	.050	.250	.500	.750	.950
X/LD					
.050	.5986	.7485	.5610	.6970	.7314
.500	.5032	.5337	.4483	.5633	.6892
.950	.7476	.6163	.6300	.5117	.5093

MACH (1) = .200 ALPHA (5) = 19.390

X/L	.050	.250	.500	.750	.950
X/LD					
.050	.6853	.7844	.6281	.7287	.7623
.500	.5627	.5973	.5438	.6083	.7364
.950	.8115	.6676	.6820	.5929	.5952

NAAL 737 OA143 ORB/B66-MAIN GEAR LT SDWALL CPS (RFCG06) (14 MAY 75)

REFERENCE DATA

SREF =	2690.0000 SQ.FT.	XMRP =	1076.7000 IN.XO		
LREF =	474.8000 IN.	YMRP =	.0000 IN.YO		
BREF =	936.6800 IN.	ZMRP =	375.0000 IN.ZO		
SCALE =	.0405				

PARAMETRIC DATA

BETA =	.000	BDFLAP =	-11.700
ELEVON =	10.000	RUDDER =	.000
SPDBRK =	25.000	GRDPLN =	1.000
LNGRPS =	1.000	LNDGDR =	100.000

SECTION (1)MN GR LT SWAL CPS DEPENDENT VARIABLE CP

MACH (1) = .200 ALPHA (1) = .110

X/L	.050	.250	.500	.750	.950
X/LD					
.050	.0158	-.0460	-.0274	-.0398	.1222
.500	.0036	-.0447	-.0662	-.0783	.0165
.950	.0103	-.0287	-.0616	-.0701	-.1618

MACH (1) = .200 ALPHA (2) = 5.470

X/L	.050	.250	.500	.750	.950
X/LD					
.050	.2888	.2172	.2230	.1732	.3502
.500	.2645	.2142	.2079	.1722	.1236
.950	.2565	.2243	.2234	.2338	.3498

MACH (1) = .200 ALPHA (3) = 10.840

X/L	.050	.250	.500	.750	.950
X/LD					
.050	.4103	.3954	.3938	.4163	.6393
.500	.4099	.3954	.3417	.3991	.5673
.950	.3715	.4062	.4132	.4031	.3981

MACH (1) = .200 ALPHA (4) = 16.230

X/L	.050	.250	.500	.750	.950
X/LD					
.050	.5672	.5923	.5705	.5768	.7330
.500	.5494	.5473	.4904	.5620	.6848
.950	.6328	.5812	.5833	.5373	.5522

MACH (1) = .200 ALPHA (5) = 19.450

X/L	.050	.250	.500	.750	.950
X/LD					
.050	.6581	.7171	.6387	.6872	.7729
.500	.6214	.6305	.5569	.6413	.7439
.950	.7427	.6660	.6651	.6116	.6339

NAAL 737 OA143 ORB/B66-MAIN GEAR LT SDWALL CPS (RFCG07) (14 MAY 75)

REFERENCE DATA

SREF = 2690.0000 SQ.FT. XMRP = 1076.7000 IN.XO
LREF = 474.8000 IN. YMRP = .0000 IN.YO
BREF = 936.6800 IN. ZMRP = 375.0000 IN.ZO
SCALE = .0405

PARAMETRIC DATA

BETA = -4.000 BDFLAP = -11.700
ELEVON = 10.000 RUDDER = .000
SPDBRK = 25.000 GRDPLN = 1.000
LNGRPS = 1.000 LNDGDR = 100.000

SECTION (1)MN GR LT SWAL CPS DEPENDENT VARIABLE CP

MACH (1) = .200 ALPHA (1) = .130

X/L	.050	.250	.500	.750	.950
X/LD					
.050	-.0494	-.1260	-.0703	-.0459	.2130
.500	-.0779	-.1059	-.0996	-.1430	.1002
.950	-.0707	-.0921	-.1394	-.1609	-.0906

MACH (1) = .200 ALPHA (2) = 5.470

X/L	.050	.250	.500	.750	.950
X/LD					
.050	.2037	.1825	.1634	.1626	.2575
.500	.2033	.1683	.1579	.1507	.1599
.950	.2087	.1754	.1584	.1589	.0266

MACH (1) = .200 ALPHA (3) = 10.870

X/L	.050	.250	.500	.750	.950
X/LD					
.050	.4723	.4040	.4219	.3597	.5711
.500	.4440	.3994	.4019	.3678	.3862
.950	.4298	.4007	.4015	.4264	.5807

MACH (1) = .200 ALPHA (4) = 16.240

X/L	.050	.250	.500	.750	.950
X/LD					
.050	.5729	.5778	.5852	.6119	.7575
.500	.5786	.5683	.5324	.5983	.7190
.950	.5522	.5894	.5923	.5812	.5687

MACH (1) = .200 ALPHA (5) = 19.450

X/L	.050	.250	.500	.750	.950
X/LD					
.050	.6641	.6858	.6710	.6925	.8075
.500	.6542	.6501	.6144	.6771	.7831
.950	.7346	.6838	.6805	.6566	.6503

NAAL 737 OA143 ORB/B66-MAIN GEAR LT SDWALL CPS (RFCG08) (14 MAY 75)

REFERENCE DATA

SREF = 2690.0000 SQ.FT. XMRP = 1076.7000 IN.XO
LREF = 474.8000 IN. YMRP = .0000 IN.YO
BREF = 936.6800 IN. ZMRP = 375.0000 IN.ZO
SCALE = .0405

PARAMETRIC DATA

BETA = -8.000 BDFLAP = -11.700
ELEVON = 10.000 RUDDER = .000
SPDBRK = 25.000 GRDPLN = 1.000
LNGRPS = 1.000 LNDGDR = 100.000

SECTION (1)MN GR LT SWAL CPS DEPENDENT VARIABLE CP

MACH (1) = .200 ALPHA (1) = .120

X/L	.050	.250	.500	.750	.950
X/LD					
.050	-.2328	-.2889	-.2554	-.0860	.3329
.500	-.1774	-.2831	-.2168	-.2585	.1216
.950	-.1585	-.2734	-.3082	-.2592	-.1545

MACH (1) = .200 ALPHA (2) = 5.490

X/L	.050	.250	.500	.750	.950
X/LD					
.050	.1755	.1068	.1280	.1280	.3263
.500	.1638	.1060	.0810	.0810	.1923
.950	.1705	.1260	.0847	.0882	.0521

MACH (1) = .200 ALPHA (3) = 10.870

X/L	.050	.250	.500	.750	.950
X/LD					
.050	.4273	.3697	.3623	.3552	.4622
.500	.4070	.3677	.3585	.3464	.3152
.950	.4169	.3809	.3722	.3738	.4063

MACH (1) = .200 ALPHA (4) = 16.230

X/L	.050	.250	.500	.750	.950
X/LD					
.050	.5982	.5606	.5507	.5661	.7318
.500	.5838	.5631	.5342	.5533	.6792
.950	.5627	.5589	.5631	.5806	.6079

MACH (1) = .200 ALPHA (5) = 19.440

X/L	.050	.250	.500	.750	.950
X/LD					
.050	.6639	.6540	.6639	.6862	.8036
.500	.6627	.6495	.6230	.6670	.7722
.950	.6412	.6668	.6643	.6626	.6633

NAAL 737 OA143 ORB/B66-MAIN GEAR LT SDWALL CPS (RFCG09) (14 MAY 75)

REFERENCE DATA

SREF =	2690.0000 SQ.FT.	XMRP =	1076.7000 IN.XO
LREF =	474.8000 IN.	YMRP =	.0000 IN.YO
BREF =	936.6800 IN.	ZMRP =	375.0000 IN.ZO
SCALE =	.0405		

PARAMETRIC DATA

BETA =	4.000	BDFLAP =	-11.700
ELEVON =	10.000	RUDDER =	.000
SPDBRK =	25.000	GRDPLN =	1.000
LNGRPS =	1.000	LNDGDR =	100.000

SECTION (1)MN GR LT SWAL CPS DEPENDENT VARIABLE CP

MACH (1) = .200 ALPHA (1) = .110

X/L	.050	.250	.500	.750	.950
X/LD					
.050	.0757	.0182	.0036	-.0155	.1361
.500	.0545	.0124	-.0021	-.0246	-.0368
.950	.0582	.0240	.0119	.0113	-.0260

MACH (1) = .200 ALPHA (2) = 5.450

X/L	.050	.250	.500	.750	.950
X/LD					
.050	.2335	.2172	.2089	.2176	.4423
.500	.2277	.2197	.1773	.2125	.3803
.950	.2097	.2214	.2335	.2152	.2183

MACH (1) = .200 ALPHA (3) = 10.830

X/L	.050	.250	.500	.750	.950
X/LD					
.050	.4218	.4449	.4375	.4379	.6262
.500	.4031	.4027	.3444	.4261	.5741
.950	.4772	.4400	.4565	.3933	.3862

MACH (1) = .200 ALPHA (4) = 16.230

X/L	.050	.250	.500	.750	.950
X/LD					
.050	.5937	.6979	.5747	.6682	.7257
.500	.5491	.5644	.4900	.5763	.6871
.950	.6983	.6169	.6169	.5358	.5409

MACH (1) = .200 ALPHA (5) = 19.440

X/L	.050	.250	.500	.750	.950
X/LD					
.050	.6866	.7842	.6491	.7472	.7701
.500	.6021	.6260	.5663	.6418	.7492
.950	.7990	.6886	.6981	.6115	.6152

NAAL 737 OA143 ORB/B66-MAIN GEAR LT SDWALL CPS (RFCG10) (14 MAY 75)

REFERENCE DATA

SREF =	2690.0000 SQ.FT.	XMRP =	1076.7000 IN.XO		
LREF =	474.8000 IN.	YMRP =	.0000 IN.YO		
BREF =	936.6800 IN.	ZMRP =	375.0000 IN.ZO		
SCALE =	.0405				

PARAMETRIC DATA

BETA =	8.000	BDFLAP =	-11.700
ELEVON =	10.000	RUDDER =	.000
SPDBRK =	25.000	GRDPLN =	1.000
LNGRPS =	1.000	LNDGDR =	100.000

SECTION (1)MN GR LT SWAL CPS DEPENDENT VARIABLE CP

MACH (1) = .200 ALPHA (1) = .110

X/L	.050	.250	.500	.750	.950
X/LD					
.050	.0940	.0387	.0316	-.0036	.1758
.500	.0722	.0371	.0216	-.0033	.0233
.950	.0689	.0442	.0379	.0387	.0835

MACH (1) = .200 ALPHA (2) = 5.430

X/L	.050	.250	.500	.750	.950
X/LD					
.050	.2908	.3125	.3234	.3692	.5733
.500	.2820	.2774	.1940	.3170	.4999
.950	.3050	.3309	.3463	.2816	.2522

MACH (1) = .200 ALPHA (3) = 10.830

X/L	.050	.250	.500	.750	.950
X/LD					
.050	.4677	.5044	.4573	.5193	.6856
.500	.4357	.4369	.3416	.4638	.6125
.950	.5610	.5268	.5110	.4073	.4019

MACH (1) = .200 ALPHA (4) = 16.230

X/L	.050	.250	.500	.750	.950
X/LD					
.050	.6117	.7523	.5758	.7071	.7324
.500	.5111	.5470	.4690	.5780	.6990
.950	.7597	.6253	.6422	.5275	.5238

MACH (1) = .200 ALPHA (5) = 19.430

X/L	.050	.250	.500	.750	.950
X/LD					
.050	.6941	.7900	.6365	.7384	.7676
.500	.5735	.6064	.5546	.6186	.7374
.950	.8159	.6743	.6896	.6008	.5998

NAAL 737 OA143 ORB/B66-MAIN GEAR LT SOWALL CPS (RFCG11) (14 MAY 75)

REFERENCE DATA

SREF =	2690.0000 SQ.FT.	XMRP =	1076.7000 IN.XO		
LREF =	474.8000 IN.	YMRP =	.0000 IN.YO		
BREF =	936.6890 IN.	ZMRP =	375.0000 IN.ZO		
SCALE =	.0405				

PARAMETRIC DATA

BETA =	.000	BDFLAP =	-11.700
ELEVON =	15.000	RUDDER =	.000
SPDBRK =	25.000	GRDPLN =	1.000
LNGRPS =	1.000	LNDGDR =	100.000

SECTION (1)MN GR LT SWAL CPS DEPENDENT VARIABLE CP

MACH (1) = .200 ALPHA (1) = .190

X/L	.050	.250	.500	.750	.950
X/LD					
.050	.0421	-.0152	.0011	-.0084	.1366
.500	.0321	-.0118	-.0273	-.0465	.0357
.950	.0421	.0015	-.0257	-.0397	-.1270

MACH (1) = .200 ALPHA (2) = 5.560

X/L	.050	.250	.500	.750	.950
X/LD					
.050	.3205	.2411	.2477	.1941	.3745
.500	.2904	.2402	.2314	.1993	.1535
.950	.2799	.2498	.2469	.2587	.3964

MACH (1) = .200 ALPHA (3) = 10.920

X/L	.050	.250	.500	.750	.950
X/LD					
.050	.4290	.4199	.4207	.4468	.6581
.500	.4244	.4174	.3628	.4260	.5904
.950	.3857	.4311	.4390	.4206	.4417

MACH (1) = .200 ALPHA (4) = 16.300

X/L	.050	.250	.500	.750	.950
X/LD					
.050	.5832	.6071	.5816	.5978	.7397
.500	.5626	.5614	.5045	.5716	.6912
.950	.6541	.5923	.5931	.5490	.5971

MACH (1) = .200 ALPHA (5) = 19.510

X/L	.050	.250	.500	.750	.950
X/LD					
.050	.6591	.7200	.6468	.6970	.7732
.500	.6251	.6337	.5740	.6445	.7384
.950	.7405	.6681	.6697	.6171	.6428

NAAL 737 OA143 ORB/B66-MAIN GEAR LT SDWALL CPS (RFCG12) (14 MAY 75)

REFERENCE DATA

SREF = 2690.0000 SQ.FT. XMRP = 1076.7000 IN.XO
LREF = 474.8000 IN. YMRP = .0000 IN.YO
BREF = 936.6800 IN. ZMRP = 375.0000 IN.ZO
SCALE = .0405

PARAMETRIC DATA

BETA = -4.000 BDFLAP = -11.700
ELEVON = 15.000 RUDDER = .000
SPDBRK = 25.000 GRDPLN = 1.000
LNGRPS = 1.000 LNDGDR = 100.000

SECTION (1)MN GR LT SWAL CPS DEPENDENT VARIABLE CP

MACH (1) = .200 ALPHA (1) = -.200

X/L	.050	.250	.500	.750	.950
X/LD					
.050	-.0160	-.0911	-.0475	-.0386	.2226
.500	-.0441	-.0714	-.1130	-.1157	.1006
.950	-.0361	-.0630	-.1063	-.1248	-.0610

MACH (1) = .200 ALPHA (2) = 5.570

X/L	.050	.250	.500	.750	.950
X/LD					
.050	.2317	.2112	.1891	.1878	.2834
.500	.2279	.1941	.1845	.1790	.1773
.950	.2379	.2041	.1874	.1865	.0595

MACH (1) = .200 ALPHA (3) = 10.970

X/L	.050	.250	.500	.750	.950
X/LD					
.050	.4872	.4216	.4357	.3780	.5998
.500	.4665	.4203	.4212	.3862	.4487
.950	.4502	.4249	.4232	.4422	.5638

MACH (1) = .200 ALPHA (4) = 16.300

X/L	.050	.250	.500	.750	.950
X/LD					
.050	.5917	.5979	.6041	.6315	.7714
.500	.5934	.5851	.5469	.6075	.7375
.950	.5805	.6087	.6054	.5980	.6044

MACH (1) = .200 ALPHA (5) = 19.500

X/L	.050	.250	.500	.750	.950
X/LD					
.050	.6815	.6988	.6791	.7082	.8212
.500	.6684	.6643	.6272	.6904	.7909
.950	.7556	.6972	.6943	.6736	.6702

NAAL 737 OA143 ORB/B66-MAIN GEAR LT SDWALL CPS (RFCG13) (14 MAY 75)

REFERENCE DATA

SREF = 2690.0000 SQ.FT. XMRP = 1076.7000 IN.XO
LREF = 474.8000 IN. YMRP = .0000 IN.YO
BREF = 936.6800 IN. ZMRP = 375.0000 IN.ZO
SCALE = .0405

PARAMETRIC DATA

BETA = -8.000 BDFLAP = -11.700
ELEVON = 15.000 RUDDER = .000
SPDBRK = 25.000 GRDPLN = 1.000
LNGRPS = 1.000 LNDGDR = 100.000

SECTION (1)MN GR LT SWAL CPS DEPENDENT VARIABLE CP

MACH (1) = .200 ALPHA (1) = .210

X/L	.050	.250	.500	.750	.950
X/LD					
.050	-.1126	-.1917	-.1314	-.0797	.3274
.500	-.1385	-.1699	-.1507	-.1853	.2072
.950	-.1193	-.1494	-.1921	-.2204	-.1146

MACH (1) = .200 ALPHA (2) = 5.590

X/L	.050	.250	.500	.750	.950
X/LD					
.050	.2043	.1292	.1534	.1566	.3387
.500	.1889	.1380	.1108	.1143	.2098
.950	.1985	.1555	.1171	.1211	.0812

MACH (1) = .200 ALPHA (3) = 10.970

X/L	.050	.250	.500	.750	.950
X/LD					
.050	.4575	.3966	.3920	.3772	.4924
.500	.4368	.3941	.3896	.3714	.3409
.950	.4418	.4078	.4028	.4036	.4738

MACH (1) = .200 ALPHA (4) = 16.340

X/L	.050	.250	.500	.750	.950
X/LD					
.050	.6139	.5778	.5733	.5838	.7459
.500	.6010	.5807	.5485	.5723	.6925
.950	.5762	.5870	.5812	.5933	.6160

MACH (1) = .200 ALPHA (5) = 19.520

X/L	.050	.250	.500	.750	.950
X/LD					
.050	.6692	.6679	.6720	.6932	.8101
.500	.6696	.6593	.6333	.6683	.7804
.950	.6564	.6762	.6749	.6680	.6909

NAAL 737 OA143 ORB/B66-MAIN GEAR LT SDWALL CPS (RFCG14) (14 MAY 75)

REFERENCE DATA

SREF = 2690.0000 SQ.FT. XMRP = 1076.7000 IN.XO
LREF = 474.8000 IN. YMRP = .0000 IN.YO
BREF = 936.6800 IN. ZMRP = 375.0000 IN.ZO
SCALE = .0405

PARAMETRIC DATA

BETA = 4.000 BDFLAP = -11.700
ELEVON = 15.000 RUDDER = .000
SPDBRK = 25.000 GRDPLN = 1.000
LNGRPS = 1.000 LNDGDR = 100.000

SECTION (1)MN GR LT SWAL CPS DEPENDENT VARIABLE CP

MACH (1) = .200 ALPHA (1) = .170

X/L	.050	.250	.500	.750	.950
X/LD					
.050	.1065	.0446	.0342	.0120	.1639
.500	.0835	.0408	.0283	.0045	-.0128
.950	.0877	.0526	.0438	.0425	.0295

MACH (1) = .200 ALPHA (2) = 5.550

X/L	.050	.250	.500	.750	.950
X/LD					
.050	.2535	.2410	.2423	.2436	.4584
.500	.2502	.2393	.2022	.2388	.4028
.950	.2285	.2485	.2614	.2371	.2620

MACH (1) = .200 ALPHA (3) = 10.910

X/L	.050	.250	.500	.750	.950
X/LD					
.050	.4462	.4670	.4537	.4626	.6433
.500	.4258	.4266	.3638	.4435	.5922
.950	.5078	.4670	.4758	.4115	.4142

MACH (1) = .200 ALPHA (4) = 16.300

X/L	.050	.250	.500	.750	.950
X/LD					
.050	.6072	.7073	.5875	.6792	.7277
.500	.5590	.5714	.5043	.5820	.6978
.950	.7102	.6204	.6290	.5483	.5804

MACH (1) = .200 ALPHA (5) = 19.500

X/L	.050	.250	.500	.750	.950
X/LD					
.050	.6996	.7950	.6629	.7558	.7744
.500	.6118	.6419	.5808	.6496	.7538
.950	.8036	.7013	.7104	.6250	.6334

NAAL 737 OA143 ORB/B66-MAIN GEAR LT SDWALL CPS (RFCG15) (14 MAY 75)

REFERENCE DATA

SREF =	2690.0000 SQ.FT.	XMRP =	1076.7000 IN.XO		
LREF =	474.8000 IN.	YMRP =	.0000 IN.YO		
BREF =	936.6800 IN.	ZMRP =	375.0000 IN.ZO		
SCALE =	.0405				

PARAMETRIC DATA

BETA =	8.000	BDFLAP =	-11.700
ELEVON =	15.000	RUDDER =	.000
SPDBRK =	25.000	GRDPLN =	1.000
LNGRPS =	1.000	LNDGOR =	100.000

SECTION (1)MN GR LT SWAL CPS DEPENDENT VARIABLE CP

MACH (1) = .200 ALPHA (1) = .200

X/L	.050	.250	.500	.750	.950
X/LD					
.050	.1216	.0695	.0616	.0301	.1991
.500	.1020	.0678	.0499	.0290	.0573
.950	.0970	.0732	.0695	.0676	.1184

MACH (1) = .200 ALPHA (2) = 5.550

X/L	.050	.250	.500	.750	.950
X/LD					
.050	.3152	.3386	.3419	.3811	.5900
.500	.3010	.2998	.2183	.3404	.5173
.950	.3419	.3578	.3703	.3008	.2913

MACH (1) = .200 ALPHA (3) = 10.930

X/L	.050	.250	.500	.750	.950
X/LD					
.050	.4894	.5341	.4678	.5451	.6981
.500	.4538	.4567	.3631	.4828	.6293
.950	.5879	.5440	.5295	.4306	.4313

MACH (1) = .200 ALPHA (4) = 16.300

X/L	.050	.250	.500	.750	.950
X/LD					
.050	.6241	.7622	.5865	.7137	.7428
.500	.5245	.5563	.4815	.5873	.7134
.950	.7684	.6353	.6543	.5377	.5404

MACH (1) = .200 ALPHA (5) = 19.510

X/L	.050	.250	.500	.750	.950
X/LD					
.050	.7023	.7937	.6452	.7408	.7720
.500	.5841	.6153	.5685	.6231	.7472
.950	.8196	.6801	.6986	.6147	.6245

NAAL 737 OA143 OR8/B66-MAIN GEAR LT SDWALL CPS (RFCG16) (14 MAY 75)

REFERENCE DATA

SREF =	2690.0000 SQ.FT.	XMRP =	1076.7000 IN.XO
LREF =	474.8000 IN.	YMRP =	.0000 IN.YO
BREF =	936.6800 IN.	ZMRP =	375.0000 IN.ZO
SCALE =	.0405		

PARAMETRIC DATA

BETA =	.000	BDFLAP =	-11.700
ELEVON =	15.000	RUDDER =	.000
SPDBRK =	25.000	GRDPLN =	.000
LNGRPS =	1.000	LNDGDR =	100.000

SECTION (1)MN GR LT SWAL CPS DEPENDENT VARIABLE CP

MACH (1) = .230 ALPHA (1) = .120

X/L	.050	.250	.500	.750	.950
X/LD					
.050	.0273	-.0459	-.0166	-.0332	.1796
.500	.0045	-.0397	-.0639	-.0817	.0543
.950	.0150	-.0241	-.0697	-.0682	-.0621

MACH (1) = .230 ALPHA (2) = 5.370

X/L	.050	.250	.500	.750	.950
X/LD					
.050	.1562	.1195	.0990	.0993	.2144
.500	.1444	.1027	.0932	.0871	.0740
.950	.1498	.1124	.0996	.0993	-.0211

MACH (1) = .230 ALPHA (3) = 10.620

X/L	.050	.250	.500	.750	.950
X/LD					
.050	.3321	.2392	.2506	.1836	.3949
.500	.2982	.2365	.2312	.1896	.1138
.950	.2882	.2489	.2486	.2647	.4004

MACH (1) = .230 ALPHA (4) = 15.880

X/L	.050	.250	.500	.750	.950
X/LD					
.050	.3794	.3473	.3358	.3515	.6136
.500	.3736	.3500	.2970	.3369	.5220
.950	.3551	.3561	.3547	.3618	.4006

MACH (1) = .230 ALPHA (5) = 19.030

X/L	.050	.250	.500	.750	.950
X/LD					
.050	.4204	.4163	.4247	.4538	.6628
.500	.4207	.4073	.3478	.4305	.5922
.950	.3797	.4241	.4341	.4129	.3983

NAAL 737 OA143 ORB/B66-MAIN GEAR LT SDWALL CPS (RFCG17) (14 MAY 75)

REFERENCE DATA

SREF =	2690.0000 SQ.FT.	XMRP =	1076.7000 IN.XO		
LREF =	474.8000 IN.	YMRP =	.0000 IN.YO		
BREF =	936.6800 IN.	ZMRP =	375.0000 IN.ZO		
SCALE =	.0405				

PARAMETRIC DATA

BETA =	-4.000	BDFLAP =	-11.700
ELEVON =	15.000	RUDDER =	.000
SPDBRK =	25.000	GRDPLN =	.000
LNGRPS =	1.000	LNDGDR =	100.000

SECTION (1)MN GR LT SWAL CPS DEPENDENT VARIABLE CP

MACH (1) = .230 ALPHA (1) = .130

X/L	.050	.250	.500	.750	.950
X/LD					
.050	-.0362	-.1258	-.0633	-.0646	.2008
.500	-.0545	-.1058	-.1207	-.1428	.0930
.950	-.0542	-.1010	-.1553	-.1554	-.0767

MACH (1) = .230 ALPHA (2) = 5.410

X/L	.050	.250	.500	.750	.950
X/LD					
.050	.1098	.0385	.0574	.0562	.2300
.500	.0993	.0416	.0142	.0227	.1119
.950	.1138	.0554	.0257	.0289	-.0111

MACH (1) = .230 ALPHA (3) = 10.640

X/L	.050	.250	.500	.750	.950
X/LD					
.050	.2672	.1990	.1898	.1873	.3275
.500	.2483	.1983	.1898	.1751	.1576
.950	.2557	.2094	.2000	.1967	.1327

MACH (1) = .230 ALPHA (4) = 15.910

X/L	.050	.250	.500	.750	.950
X/LD					
.050	.4255	.3342	.3620	.2893	.4964
.500	.3961	.3366	.3390	.2973	.2420
.950	.3833	.3427	.3430	.3667	.5044

MACH (1) = .230 ALPHA (5) = 19.060

X/L	.050	.250	.500	.750	.950
X/LD					
.050	.4498	.4028	.3971	.4012	.6447
.500	.4354	.4028	.3695	.3914	.5572
.950	.4250	.4102	.4166	.4262	.4564

NAAL 737 OA143 ORB/B66-MAIN GEAR LT SDWALL CPS (RFCG18) (14 MAY 75)

REFERENCE DATA

SREF = 2690.0000 SQ.FT. XMRP = 1076.7000 IN.XO
LREF = 474.8000 IN. YMRP = .0000 IN.YO
BREF = 936.6800 IN. ZMRP = 375.0000 IN.ZO
SCALE = .0405

PARAMETRIC DATA

BETA = -8.000 BDFLAP = -11.700
ELEVON = 15.000 RUDDER = .000
SPDBRK = 25.000 GRDPLN = .000
LNGRPS = 1.000 LNDGDR = 100.000

SECTION (1)MN GR LT SWAL CPS DEPENDENT VARIABLE CP

MACH (1) = .230 ALPHA (1) = .140

X/L	.050	.250	.500	.750	.950
X/LD					
.050	-.0854	-.2371	-.1702	-.1647	.1649
.500	-.1163	-.2242	-.2194	-.2303	.0022
.950	-.1108	-.2120	-.2503	-.2311	-.1411

MACH (1) = .230 ALPHA (2) = 5.420

X/L	.050	.250	.500	.750	.950
X/LD					
.050	.0625	-.0211	.0108	.0107	.2571
.500	.0443	-.0161	-.0451	-.0457	.0953
.950	.0503	-.0022	-.0535	-.0416	-.0288

MACH (1) = .230 ALPHA (3) = 10.650

X/L	.050	.250	.500	.750	.950
X/LD					
.050	.2049	.1529	.1573	.1624	.2890
.500	.2005	.1471	.1275	.1307	.1899
.950	.2184	.1647	.1383	.1351	.0778

MACH (1) = .230 ALPHA (4) = 15.920

X/L	.050	.250	.500	.750	.950
X/LD					
.050	.3746	.3024	.2926	.2820	.4221
.500	.3496	.3014	.2902	.2735	.2439
.950	.3581	.3142	.3034	.3032	.3297

MACH (1) = .230 ALPHA (5) = 19.070

X/L	.050	.250	.500	.750	.950
X/LD					
.050	.4538	.3825	.3828	.3342	.5045
.500	.4279	.3778	.3683	.3322	.2706
.950	.4293	.3912	.3852	.3953	.5147

NAAL 737 OA143 ORB/B66-MAIN GEAR LT SDWALL CPS (RFC019) (14 MAY 75)

REFERENCE DATA

SREF = 2690.0000 SQ.FT. XMRP = 1076.7000 IN.XO
LREF = 474.8000 IN. YMRP = .0000 IN.YO
BREF = 936.6800 IN. ZMRP = 375.0000 IN.ZO
SCALE = .0405

PARAMETRIC DATA

BETA = 4.000 BDFLAP = -11.700
ELEVON = 15.000 RUDDER = .000
SPDBRK = 25.000 GRDPLN = .000
LNGRPS = 1.000 LNDGDR = 100.000

SECTION (1)MN GR LT SWAL CPS DEPENDENT VARIABLE CP

MACH (1) = .230 ALPHA (1) = .150

X/L	.050	.250	.500	.750	.950
X/LD					
.050	.0531	.0338	.0149	.0148	.1057
.500	.0555	.0129	.0065	-.0049	.0230
.950	.0615	.0217	.0054	.0082	-.0769

MACH (1) = .230 ALPHA (2) = 5.360

X/L	.050	.250	.500	.750	.950
X/LD					
.050	.2024	.1326	.1261	.0910	.2685
.500	.1775	.1309	.1157	.0836	.0536
.950	.1789	.1410	.1326	.1375	.1964

MACH (1) = .230 ALPHA (3) = 10.620

X/L	.050	.250	.500	.750	.950
X/LD					
.050	.2665	.2523	.2567	.2728	.4680
.500	.2631	.2537	.2065	.2507	.4090
.950	.2476	.2567	.2685	.2590	.2885

MACH (1) = .230 ALPHA (4) = 15.860

X/L	.050	.250	.500	.750	.950
X/LD					
.050	.3641	.3755	.3902	.4181	.6179
.500	.3647	.3546	.2912	.3885	.5603
.950	.3677	.3849	.4020	.3605	.3778

MACH (1) = .230 ALPHA (5) = 19.040

X/L	.050	.250	.500	.750	.950
X/LD					
.050	.4357	.4625	.4608	.4749	.6670
.500	.4219	.4152	.3515	.4543	.6141
.950	.4960	.4601	.4725	.4176	.3948

NAAL 737 OA143 ORB/B66-MAIN GEAR LT SDWALL CPS (RFCG20) (14 MAY 75)

REFERENCE DATA

SREF = 2690.0000 SQ.FT. XMRP = 1076.7000 IN.XO
LREF = 474.8000 IN. YMRP = .0000 IN.YO
BREF = 936.6800 IN. ZMRP = 375.0000 IN.ZO
SCALE = .0405

PARAMETRIC DATA

BETA = 8.000 BDFLAP = -11.700
ELEVON = 15.000 RUDDER = .000
SPDBRK = 25.000 GRDPLN = .000
LNGRPS = 1.000 LNDGDR = 100.000

SECTION (1)MN GR LT SWAL CPS DEPENDENT VARIABLE CP

MACH (1) = .230 ALPHA (1) = .130

X/L	.050	.250	.500	.750	.950
X/LD					
.050	.0890	.0395	.0216	.0155	.1626
.500	.0721	.0293	.0182	-.0004	-.0002
.950	.0799	.0395	.0253	.0292	.0030

MACH (1) = .230 ALPHA (2) = 5.350

X/L	.050	.250	.500	.750	.950
X/LD					
.050	.1968	.1809	.1755	.1927	.3785
.500	.1917	.1796	.1410	.1800	.3300
.950	.1725	.1911	.1938	.1924	.1874

MACH (1) = .230 ALPHA (3) = 10.610

X/L	.050	.250	.500	.750	.950
X/LD					
.050	.3035	.3170	.3327	.3780	.5813
.500	.3019	.2941	.2193	.3349	.5163
.950	.2911	.3327	.3478	.3050	.3275

MACH (1) = .230 ALPHA (4) = 15.840

X/L	.050	.250	.500	.750	.950
X/LD					
.050	.4027	.4425	.4277	.4470	.6727
.500	.3818	.3825	.2979	.4252	.6033
.950	.4567	.4574	.4547	.3841	.3648

MACH (1) = .230 ALPHA (5) = 19.010

X/L	.050	.250	.500	.750	.950
X/LD					
.050	.4729	.5174	.4702	.5097	.6954
.500	.4321	.4378	.3452	.4764	.6185
.950	.5821	.5298	.5099	.4213	.3968

NAAL 737 OA143 ORB/B66-MAIN GEAR LT SDWALL CPS (RFCG21) (14 MAY 75)

REFERENCE DATA

SREF = 2690.0000 SQ.FT. XMRP = 1076.7000 IN.XO
LREF = 474.8000 IN. YMRP = .0000 IN.YO
BREF = 936.6800 IN. ZMRP = 375.0000 IN.ZO
SCALE = .0405

PARAMETRIC DATA

BETA = .000 BDFLAP = -11.700
ELEVON = 10.000 RUDDER = .000
SPDBRK = 25.000 GRDPLN = .000
LNGRPS = 1.000 LNDGDR = 100.000

SECTION (1)MN GR LT SWAL CPS DEPENDENT VARIABLE CP

MACH (1) = .230 ALPHA (1) = .080

X/L	.050	.250	.500	.750	.950
X/LD					
.050	.0159	-.0624	-.0316	-.0392	.1694
.500	-.0073	-.0553	-.0817	-.0952	.0462
.950	-.0012	-.0425	-.0830	-.0854	-.0690

MACH (1) = .230 ALPHA (2) = 5.340

X/L	.050	.250	.500	.750	.950
X/LD					
.050	.1422	.1107	.0850	.0848	.1971
.500	.1300	.0907	.0823	.0750	.0679
.950	.1364	.1009	.0850	.0856	-.0234

MACH (1) = .230 ALPHA (3) = 10.550

X/L	.050	.250	.500	.750	.950
X/LD					
.050	.3109	.2256	.2337	.1713	.3730
.500	.2807	.2229	.2132	.1744	.1054
.950	.2723	.2337	.2310	.2484	.3721

MACH (1) = .230 ALPHA (4) = 15.810

X/L	.050	.250	.500	.750	.950
X/LD					
.050	.3769	.3380	.3193	.3397	.6043
.500	.3654	.3430	.2828	.3267	.5082
.950	.3434	.3451	.3454	.3549	.3862

MACH (1) = .230 ALPHA (5) = 18.980

X/L	.050	.250	.500	.750	.950
X/LD					
.050	.4128	.4027	.4084	.4391	.6624
.500	.4114	.4013	.3393	.4245	.5861
.950	.3676	.4178	.4276	.4088	.3937

NAAL 737 OA143 ORB/B66-MAIN GEAR LT SDWALL CPS (RFCG22) (14 MAY 75)

REFERENCE DATA

SREF =	2690.0000 SQ.FT.	XMRP =	1076.7000 IN.XO		
LREF =	474.8000 IN.	YMRP =	.0000 IN.YO		
BREF =	936.6800 IN.	ZMRP =	375.0000 IN.ZO		
SCALE =	.0405				

PARAMETRIC DATA

BETA =	-4.000	BDFLAP =	-11.700
ELEVON =	10.000	RUDDER =	.000
SPDBRK =	25.000	GRDPLN =	.000
LNGRPS =	1.000	LNDGDR =	100.000

SECTION (1)MN GR LT SWAL CPS DEPENDENT VARIABLE CP

MACH (1) = .230 ALPHA (1) = .090

X/L	.050	.250	.500	.750	.950
X/LD					
.050	-.0552	-.1402	-.0760	-.0721	.1946
.500	-.0746	-.1334	-.1273	-.1534	.1022
.950	-.0712	-.1147	-.1602	-.1729	-.0858

MACH (1) = .230 ALPHA (2) = 5.300

X/L	.050	.250	.500	.750	.950
X/LD					
.050	.0960	.0227	.0377	.0395	.2234
.500	.0865	.0238	-.0056	.0036	.1003
.950	.0983	.0424	.0105	.0110	-.0218

MACH (1) = .230 ALPHA (3) = 10.570

X/L	.050	.250	.500	.750	.950
X/LD					
.050	.2503	.1892	.1748	.1720	.3107
.500	.2298	.1818	.1738	.1606	.1437
.950	.2385	.1949	.1825	.1789	.1162

MACH (1) = .230 ALPHA (4) = 15.810

X/L	.050	.250	.500	.750	.950
X/LD					
.050	.4100	.3186	.3283	.2663	.4736
.500	.3774	.3193	.3112	.2698	.2080
.950	.3687	.3270	.3277	.3473	.4681

MACH (1) = .230 ALPHA (5) = 18.980

X/L	.050	.250	.500	.750	.950
X/LD					
.050	.4385	.3941	.3689	.3788	.6322
.500	.4257	.3958	.3609	.3728	.5468
.950	.4146	.4009	.3925	.4134	.4425

NAAL 737 OA143 ORB/B66-MAIN GEAR LT SDWALL CPS (RFCG23) (14 MAY 75)

REFERENCE DATA

SREF = 2690.0000 SQ.FT. XMRP = 1076.7000 IN.XO
LREF = 474.8000 IN. YMRP = .0000 IN.YO
BREF = 936.6800 IN. ZMRP = 375.0000 IN.ZO
SCALE = .0405

PARAMETRIC DATA

BETA = -8.000 BDFLAP = -11.700
ELEVON = 10.000 RUDDER = .000
SPDBRK = 25.000 GRDPLN = .000
LNGRPS = 1.000 LNDGDR = 100.000

SECTION (1)MN GR LT SWAL CPS DEPENDENT VARIABLE CP

MACH (1) = .230 ALPHA (1) = .100

X/L	.050	.250	.500	.750	.950
X/LD					
.050	-.1035	-.2598	-.1892	-.1867	.1591
.500	-.1341	-.2442	-.2405	-.2493	-.0164
.950	-.1273	-.2330	-.2690	-.2487	-.1523

MACH (1) = .230 ALPHA (2) = 5.320

X/L	.050	.250	.500	.750	.950
X/LD					
.050	.0502	-.0372	.0027	.0011	.2457
.500	.0285	-.0229	-.0552	-.0621	.1220
.950	.0285	-.0168	-.0698	-.0621	-.0284

MACH (1) = .230 ALPHA (3) = 10.590

X/L	.050	.250	.500	.750	.950
X/LD					
.050	.1925	.1340	.1442	.1474	.2869
.500	.1847	.1323	.1127	.1152	.1806
.950	.2026	.1489	.1178	.1184	.0635

MACH (1) = .230 ALPHA (4) = 15.850

X/L	.050	.250	.500	.750	.950
X/LD					
.050	.3620	.2930	.2792	.2682	.4100
.500	.3351	.2856	.2765	.2616	.2379
.950	.3429	.3014	.2866	.2867	.3026

MACH (1) = .230 ALPHA (5) = 19.010

X/L	.050	.250	.500	.750	.950
X/LD					
.050	.4399	.3667	.3687	.3232	.4932
.500	.4144	.3653	.3529	.3221	.2583
.950	.4191	.3791	.3737	.3808	.4860

NAAL 737 OA143 ORB/866-MAIN GEAR LT SDWALL CPS (RFCG24) (14 MAY 75)

REFERENCE DATA

SREF =	2690.0000 SQ.FT.	XMRP =	1076.7000 IN.XO		
LREF =	474.8000 IN.	YMRP =	.0000 IN.YO		
BREF =	936.6800 IN.	ZMRP =	375.0000 IN.ZO		
SCALE =	.0405				

PARAMETRIC DATA

BETA =	4.000	BDFLAP =	-11.700
ELEVON =	10.000	RUDDER =	.000
SPDBRK =	25.000	GRDPLN =	.000
LNGRPS =	1.000	LNDGDR =	100.000

SECTION (1)MN GR LT SWAL CPS DEPENDENT VARIABLE CP

MACH (1) = .230 ALPHA (1) = .070

X/L	.050	.250	.500	.750	.950
X/LD					
.050	.0394	.0125	.0000	.0016	.0950
.500	.0415	-.0019	-.0150	-.0192	.0142
.950	.0492	.0078	-.0103	-.0100	-.0813

MACH (1) = .230 ALPHA (2) = 5.290

X/L	.050	.250	.500	.750	.950
X/LD					
.050	.1891	.1201	.1117	.0799	.2576
.500	.1682	.1161	.1029	.0719	.0470
.950	.1678	.1303	.1174	.1258	.1624

MACH (1) = .230 ALPHA (3) = 10.530

X/L	.050	.250	.500	.750	.950
X/LD					
.050	.2487	.2389	.2319	.2503	.4551
.500	.2480	.2366	.1899	.2352	.3920
.950	.2288	.2423	.2517	.2429	.2673

MACH (1) = .230 ALPHA (4) = 15.790

X/L	.050	.250	.500	.750	.950
X/LD					
.050	.3547	.3634	.3796	.4140	.6073
.500	.3544	.3456	.2820	.3752	.5501
.950	.3510	.3739	.3930	.3527	.3417

MACH (1) = .230 ALPHA (5) = 18.950

X/L	.050	.250	.500	.750	.950
X/LD					
.050	.4148	.4462	.4465	.4547	.6584
.500	.4054	.4017	.3389	.4386	.6056
.950	.4720	.4449	.4609	.4047	.3727

NAAL 737 OA143 ORB/866-MAIN GEAR LT SDWALL CPS (RFCG25) (14 MAY 75)

REFERENCE DATA

SREF = 2690.0000 SQ.FT. XMRP = 1076.7000 IN.XO
LREF = 474.8000 IN. YMRP = .0000 IN.YO
BREF = 936.6800 IN. ZMRP = 375.0000 IN.ZO
SCALE = .0405

PARAMETRIC DATA

BETA = 8.000 BDFLAP = -11.700
ELEVON = 10.000 RUDDER = .000
SPDBRK = 25.000 GRDPLN = .000
LNGRPS = 1.000 LNDGOR = 100.000

SECTION (1)MN GR LT SWAL CPS DEPENDENT VARIABLE CP

MACH (1) = .230 ALPHA (1) = .100

X/L	.050	.250	.500	.750	.950
X/LD					
.050	.0816	.0291	.0112	.0036	.1562
.500	.0633	.0224	.0065	-.0103	-.0138
.950	.0664	.0251	.0166	.0203	-.0040

MACH (1) = .230 ALPHA (2) = 5.310

X/L	.050	.250	.500	.750	.950
X/LD					
.050	.1844	.1658	.1641	.1843	.3629
.500	.1793	.1644	.1277	.1636	.3123
.950	.1705	.1777	.1810	.1835	.1612

MACH (1) = .230 ALPHA (3) = 10.550

X/L	.050	.250	.500	.750	.950
X/LD					
.050	.2888	.3016	.3218	.3608	.5789
.500	.2921	.2817	.2070	.3236	.5008
.950	.2783	.3164	.3337	.2952	.2957

MACH (1) = .230 ALPHA (4) = 15.830

X/L	.050	.250	.500	.750	.950
X/LD					
.050	.3866	.4264	.4179	.4248	.6593
.500	.3688	.3711	.2816	.4218	.5955
.950	.4301	.4378	.4419	.3753	.3370

MACH (1) = .230 ALPHA (5) = 18.970

X/L	.050	.250	.500	.750	.950
X/LD					
.050	.4584	.4968	.4645	.4790	.6821
.500	.4188	.4191	.3323	.4586	.6126
.950	.5614	.5116	.4934	.4050	.3666

NAAL 737 OA143 ORB/B66-MAIN GEAR LT SDWALL CPS (RFCG26) (14 MAY 75)

REFERENCE DATA

SREF =	2690.0000 SQ.FT.	XMRP =	1076.7000 IN.XO		
LREF =	474.8000 IN.	YMRP =	.0000 IN.YO		
BREF =	936.6800 IN.	ZMRP =	375.0000 IN.ZO		
SCALE =	.0405				

PARAMETRIC DATA

BETA =	8.000	BDFLAP =	-11.700
ELEVON =	10.000	RUDDER =	.000
SPDBRK =	25.000	GRDPLN =	.000
LNGRPS =	.000	LNDGDR =	.000

SECTION (1)MN GR LT SWAL CPS DEPENDENT VARIABLE CP

MACH (1) = .230 ALPHA (1) = .070

X/L	.050	.250	.500	.750	.950
X/LD					
.050	-.0915	-.0915	-.0908	-.0871	-.0855
.500	-.0905	-.0902	-.0898	-.0901	-.0858
.950	-.0871	-.0891	-.0895	-.0874	-.0866

MACH (1) = .230 ALPHA (2) = 5.330

X/L	.050	.250	.500	.750	.950
X/LD					
.050	-.0168	-.0172	-.0182	-.0166	-.0196
.500	-.0148	-.0175	-.0182	-.0180	-.0191
.950	-.0182	-.0182	-.0209	-.0180	-.0166

MACH (1) = .230 ALPHA (3) = 10.570

X/L	.050	.250	.500	.750	.950
X/LD					
.050	.0559	.0556	.0559	.0570	.0564
.500	.0563	.0549	.0563	.0586	.0559
.950	.0559	.0559	.0566	.0559	.0562

MACH (1) = .230 ALPHA (4) = 15.850

X/L	.050	.250	.500	.750	.950
X/LD					
.050	.1349	.1345	.1345	.1322	.1357
.500	.1369	.1342	.1362	.1365	.1365
.950	.1355	.1352	.1359	.1387	.1346

MACH (1) = .230 ALPHA (5) = 19.010

X/L	.050	.250	.500	.750	.950
X/LD					
.050	.1810	.1824	.1827	.1815	.1828
.500	.1824	.1807	.1834	.1823	.1837
.950	.1814	.1807	.1824	.1820	.1823

NAAL 737 OA143 ORB/B66-MAIN GEAR LT SDWALL CPS (RFC027) (14 MAY 75)

REFERENCE DATA

SREF = 2690.0000 SQ.FT. XMRP = 1076.7000 IN.XO
LREF = 474.8000 IN. YMRP = .0000 IN.YO
BREF = 936.6800 IN. ZMRP = 375.0000 IN.ZO
SCALE = .0405

PARAMETRIC DATA

BETA = 8.000 BDFLAP = -11.700
ELEVON = 10.000 RUDDER = .000
SPDBRK = 25.000 GRDPLN = .000
LNGRPS = .000 LNDGDR = 40.000

SECTION (1)MN GR LT SWAL CPS DEPENDENT VARIABLE CP

MACH (1) = .230 ALPHA (1) = .080

X/L	.050	.250	.500	.750	.950
X/LD					
.050	-.0320	-.0794	-.0608	-.0708	.0375
.500	-.0506	-.0567	-.0923	-.1044	-.0349
.950	-.0625	-.0503	-.0787	-.1039	-.0500

MACH (1) = .230 ALPHA (2) = 5.320

X/L	.050	.250	.500	.750	.950
X/LD					
.050	.0974	.0560	.0180	.0541	.2062
.500	.0784	.0513	.0313	.0447	.0883
.950	.0832	.0560	.0662	.0820	.1861

MACH (1) = .230 ALPHA (3) = 10.550

X/L	.050	.250	.500	.750	.950
X/LD					
.050	.2161	.1641	.1566	.2526	.4675
.500	.2032	.1705	.1769	.1990	.3654
.950	.1962	.1698	.2242	.2757	.4636

MACH (1) = .230 ALPHA (4) = 15.820

X/L	.050	.250	.500	.750	.950
X/LD					
.050	.3013	.2730	.2818	.4112	.5722
.500	.2986	.2757	.2807	.3172	.5068
.950	.2959	.3147	.3950	.3930	.5436

MACH (1) = .230 ALPHA (5) = 18.970

X/L	.050	.250	.500	.750	.950
X/LD					
.050	.3522	.3338	.3512	.4947	.6158
.500	.3509	.3354	.3395	.3872	.5508
.950	.3455	.4257	.4585	.4486	.5772

NAAL 737 OA143 ORB/B66-MAIN GEAR LT SDWALL CPS (RFCG29) (14 MAY 75)

REFERENCE DATA

SREF =	2690.0000 SQ.FT.	XMRP =	1076.7000 IN.XO		
LREF =	474.8000 IN.	YMRP =	.0000 IN.YO		
BREF =	936.6800 IN.	ZMRP =	375.0000 IN.ZO		
SCALE =	.0405				

PARAMETRIC DATA

BETA =	8.000	BDFLAP =	-11.700
ELEVON =	10.000	RUDDER =	.000
SPDBRK =	25.000	GRDPLN =	.000
LNGRPS =	.000	LNDGDR =	80.000

SECTION (1)MN GR LT SWAL CPS DEPENDENT VARIABLE CP

MACH (1) = .230 ALPHA (1) = .090

X/L	.050	.250	.500	.750	.950
X/LD					
.050	.0190	-.0452	-.1193	-.0737	.1409
.500	-.0151	-.0716	-.0939	-.0819	-.0524
.950	-.0428	-.0560	-.0797	-.0560	.0555

MACH (1) = .230 ALPHA (2) = 5.330

X/L	.050	.250	.500	.750	.950
X/LD					
.050	.1204	.0886	.0609	.1061	.3249
.500	.1133	.0842	.0792	.0924	.2451
.950	.1005	.0771	.1069	.1457	.2118

MACH (1) = .230 ALPHA (3) = 10.560

X/L	.050	.250	.500	.750	.950
X/LD					
.050	.2446	.2098	.1956	.4056	.5723
.500	.2378	.2172	.2176	.3002	.5193
.950	.2162	.2236	.3185	.3289	.3499

MACH (1) = .230 ALPHA (4) = 15.810

X/L	.050	.250	.500	.750	.950
X/LD					
.050	.3242	.3020	.2798	.5831	.6618
.500	.3158	.2842	.3458	.4205	.5966
.950	.2788	.3293	.4437	.4425	.4106

MACH (1) = .230 ALPHA (5) = 18.970

X/L	.050	.250	.500	.750	.950
X/LD					
.050	.3801	.3610	.4309	.6388	.7017
.500	.3677	.3119	.4080	.4745	.6305
.950	.3684	.4000	.5025	.4891	.4503

NAAL 737 OA143 ORB/B66-MAIN GEAR LT SDWALL CPS (RFCG30) (14 MAY 75)

REFERENCE DATA

SREF = 2690.0000 SQ.FT. XMRP = 1076.7000 IN.XO
LREF = 474.8000 IN. YMRP = .0000 IN.YO
BREF = 936.6800 IN. ZMRP = 375.0000 IN.ZO
SCALE = .0405

PARAMETRIC DATA

BETA = .000 BDFLAP = -11.700
ELEVON = 5.000 RUDDER = .000
SPDBRK = 25.000 GROPLN = .000
LNGRPS = 1.000 LNDGDR = 100.000

SECTION (1)MN GR LT SWAL CPS DEPENDENT VARIABLE CP

MACH (1) = .230 ALPHA (1) = .010

X/L	.050	.250	.500	.750	.950
X/LD					
.050	-.0053	-.0747	-.0470	-.0544	.1668
.500	-.0249	-.0730	-.0984	-.1182	.0419
.950	-.0266	-.0598	-.1106	-.1097	-.0982

MACH (1) = .230 ALPHA (2) = 5.240

X/L	.050	.250	.500	.750	.950
X/LD					
.050	.1157	.0945	.0668	.0679	.1844
.500	.1123	.0759	.0631	.0524	.0537
.950	.1069	.0786	.0631	.0608	-.1359

MACH (1) = .230 ALPHA (3) = 10.470

X/L	.050	.250	.500	.750	.950
X/LD					
.050	.2937	.2068	.2125	.1563	.3544
.500	.2641	.2058	.1927	.1555	.1074
.950	.2408	.2210	.2085	.2278	.3114

MACH (1) = .230 ALPHA (4) = 15.730

X/L	.050	.250	.500	.750	.950
X/LD					
.050	.3660	.3238	.3025	.3076	.5926
.500	.3559	.3299	.2771	.3073	.4972
.950	.3116	.3329	.3248	.3438	.3363

MACH (1) = .230 ALPHA (5) = 18.890

X/L	.050	.250	.500	.750	.950
X/LD					
.050	.4048	.3906	.3940	.4232	.6546
.500	.3994	.3855	.3203	.4025	.5866
.950	.3112	.4034	.4051	.3945	.3417

NAAL 737 OA143 ORB/B66-MAIN GEAR LT SDWALL CPS (RFCG31) (14 MAY 75)

REFERENCE DATA

SREF = 2690.0000 SQ.FT. XMRP = 1076.7000 IN.XO
LREF = 474.8000 IN. YMRP = .0000 IN.YO
BREF = 936.6800 IN. ZMRP = 375.0000 IN.ZO
SCALE = .0405

PARAMETRIC DATA

BETA = -4.000 BDFLAP = -11.700
ELEVON = 5.000 RUDDER = .000
SPDBRK = 25.000 GRDPLN = .000
LNGRPS = 1.000 LNDGDR = 100.000

SECTION (1)MN GR LT SWAL CPS DEPENDENT VARIABLE CP

MACH (1) = .230 ALPHA (1) = .000

X/L	.050	.250	.500	.750	.950
X/LD					
.050	-.0724	-.1676	-.0957	-.0919	.1855
.500	-.0940	-.1452	-.1432	-.1721	.0816
.950	-.0896	-.1320	-.1909	-.1967	-.0935

MACH (1) = .230 ALPHA (2) = 5.250

X/L	.050	.250	.500	.750	.950
X/LD					
.050	.0826	-.0012	.0217	.0249	.2178
.500	.0660	.0071	-.0236	-.0155	.0936
.950	.0704	.0231	-.0110	-.0089	-.0762

MACH (1) = .230 ALPHA (3) = 10.480

X/L	.050	.250	.500	.750	.950
X/LD					
.050	.2336	.1752	.1576	.1534	.2937
.500	.2164	.1675	.1553	.1419	.1293
.950	.1931	.1759	.1586	.1619	-.0486

MACH (1) = .230 ALPHA (4) = 15.760

X/L	.050	.250	.500	.750	.950
X/LD					
.050	.3955	.3066	.3140	.2493	.4519
.500	.3625	.3028	.2964	.2553	.1934
.950	.3359	.3197	.3062	.3269	.4552

MACH (1) = .230 ALPHA (5) = 18.910

X/L	.050	.250	.500	.750	.950
X/LD					
.050	.4369	.3788	.3613	.3523	.6203
.500	.4174	.3835	.3522	.3564	.5189
.950	.3828	.3915	.3774	.4023	.4023

NAAL 737 OA143 ORB/B66-MAIN GEAR LT SDWALL CPS (RFCG32) (14 MAY 75)

REFERENCE DATA

SREF = 2690.0000 SQ.FT. XMRP = 1076.7000 IN.XO
LREF = 474.8000 IN. YMRP = .0000 IN.YO
BREF = 936.6800 IN. ZMRP = 375.0000 IN.ZO
SCALE = .0405

PARAMETRIC DATA

BETA = -8.000 BDFLAP = -11.700
ELEVON = 5.000 RUDDER = .000
SPDBRK = 25.000 GRDPLN = .000
LNGRPS = 1.000 LNDGDR = 100.000

SECTION (1)MN GR LT SWAL CPS DEPENDENT VARIABLE CP

MACH (1) = .230 ALPHA (1) = .050

X/L	.050	.250	.500	.750	.950
X/LD					
.050	-.1282	-.2752	-.1916	-.2044	.1383
.500	-.1546	-.2600	-.2640	-.2753	-.0226
.950	-.1516	-.2529	-.2962	-.2709	-.1753

MACH (1) = .230 ALPHA (2) = 5.250

X/L	.050	.250	.500	.750	.950
X/LD					
.050	.0285	-.0524	-.0104	-.0040	.2411
.500	-.0019	-.0463	-.0758	-.0848	.0907
.950	.0078	-.0338	-.0711	-.0810	-.0240

MACH (1) = .230 ALPHA (3) = 10.520

X/L	.050	.250	.500	.750	.950
X/LD					
.050	.1763	.1118	.1267	.1256	.2808
.500	.1658	.1108	.0872	.0923	.1668
.950	.1689	.1260	.0953	.0991	-.0067

MACH (1) = .230 ALPHA (4) = 15.790

X/L	.050	.250	.500	.750	.950
X/LD					
.050	.3442	.2732	.2621	.2541	.4047
.500	.3222	.2702	.2611	.2433	.2226
.950	.3060	.2871	.2682	.2668	.1421

MACH (1) = .230 ALPHA (5) = 16.960

X/L	.050	.250	.500	.750	.950
X/LD					
.050	.4268	.3487	.3453	.3073	.4800
.500	.4027	.3487	.3342	.3034	.2555
.950	.3859	.3674	.3493	.3629	.4784

NAAL 737 OA143 ORB/B66-MAIN GEAR LT SDWALL CPS (RFCG33) (14 MAY 75)

REFERENCE DATA

SREF = 2690.0000 SQ.FT. XMRP = 1076.7000 IN.XO
LREF = 474.8000 IN. YMRP = .0000 IN.YO
BREF = 936.6800 IN. ZMRP = 375.0000 IN.ZO
SCALE = .0405

PARAMETRIC DATA

BETA = 4.000 BDFLAP = -11.700
ELEVON = 5.000 RUDDER = .000
SPDBRK = 25.000 GRDPLN = .000
LNGRPS = 1.000 LNDGDR = 100.000

SECTION (1)MN GR LT SWAL CPS DEPENDENT VARIABLE CP

MACH (1) = .230 ALPHA (1) = .010

X/L	.050	.250	.500	.750	.950
X/LD					
.050	.0211	-.0135	-.0206	-.0158	.0844
.500	.0256	-.0240	-.0349	-.0376	.0014
.950	.0225	-.0097	-.0295	-.0279	-.1841

MACH (1) = .230 ALPHA (2) = 5.230

X/L	.050	.250	.500	.750	.950
X/LD					
.050	.1748	.1030	.0901	.0646	.2478
.500	.1511	.1020	.0834	.0559	.0318
.950	.1342	.1115	.0945	.1095	.0342

MACH (1) = .230 ALPHA (3) = 10.470

X/L	.050	.250	.500	.750	.950
X/LD					
.050	.2354	.2236	.2189	.2300	.4364
.500	.2334	.2243	.1809	.2181	.3654
.950	.1954	.2287	.2300	.2291	.1909

MACH (1) = .230 ALPHA (4) = 15.750

X/L	.050	.250	.500	.750	.950
X/LD					
.050	.3444	.3478	.3616	.3941	.6065
.500	.3411	.3340	.2694	.3721	.5507
.950	.2448	.3623	.3737	.3408	.3331

MACH (1) = .230 ALPHA (5) = 18.910

X/L	.050	.250	.500	.750	.950
X/LD					
.050	.4096	.4291	.4395	.4582	.6643
.500	.3965	.3917	.3275	.4316	.6044
.950	.3255	.4402	.4428	.4016	.3706

NAAL 737 OA143 ORB/B66-MAIN GEAR LT SDWALL CPS (RFCG34) (14 MAY 75)

REFERENCE DATA

SREF = 2690.0000 SQ.FT. XMRP = 1076.7000 IN.XO
LREF = 474.8000 IN. YMRP = .0000 IN.YO
BREF = 936.6800 IN. ZMRP = 375.0000 IN.ZO
SCALE = .0405

PARAMETRIC DATA

BETA = 8.000 BDFLAP = -11.700
ELEVON = 5.000 RUDDER = .000
SPDBRK = 25.000 GRDPLN = .000
LNGRPS = 1.000 LNDGDR = 100.000

SECTION (1)MN GR LT SWAL CPS DEPENDENT VARIABLE CP

MACH (1) = .230 ALPHA (1) = -4.170

X/L	.050	.250	.500	.750	.950
X/LD					
.050	-.0256	-.0516	-.0706	-.0690	.0397
.500	-.0252	-.0739	-.0807	-.0909	-.0584
.950	-.0310	-.0604	-.0814	-.0764	-.1934

MACH (1) = .230 ALPHA (2) = -2.060

X/L	.050	.250	.500	.750	.950
X/LD					
.050	.0184	-.0114	-.0385	-.0396	.0943
.500	.0112	-.0311	-.0463	-.0586	-.0465
.950	-.0002	-.0246	-.0423	-.0347	-.1806

MACH (1) = .230 ALPHA (3) = .020

X/L	.050	.250	.500	.750	.950
X/LD					
.050	.0681	.0190	-.0026	-.0108	.1439
.500	.0505	.0078	-.0049	-.0270	-.0294
.950	.0390	.0142	-.0005	.0096	-.0880

MACH (1) = .230 ALPHA (4) = 2.090

X/L	.050	.250	.500	.750	.950
X/LD					
.050	.1156	.0597	.0444	.0154	.1809
.500	.0943	.0553	.0390	.0104	.0014
.950	.0793	.0637	.0475	.0595	.0529

MACH (1) = .230 ALPHA (5) = 4.170

X/L	.050	.250	.500	.750	.950
X/LD					
.050	.1654	.1207	.1210	.0882	.2760
.500	.1488	.1210	.1078	.0983	.1844
.950	.1281	.1274	.1135	.1339	.1293

MACH (1) = .230 ALPHA (6) = 6.270

X/L	.050	.250	.500	.750	.950
X/LD					
.050	.1994	.1909	.1902	.2156	.4098
.500	.1934	.1872	.1417	.1999	.3594
.950	.1502	.2095	.2082	.2079	.1640

MACH (1) = .230 ALPHA (7) = 8.370

X/L	.050	.250	.500	.750	.950
X/LD					
.050	.2419	.2429	.2530	.2933	.5212
.500	.2466	.2355	.1701	.2655	.4502
.950	.1630	.2712	.2725	.2553	.2245

NAAL 737 OA143 ORB/B66-MAIN GEAR LT SDWALL CPS (RFCG34)

SECTION (1)MN GR LT SWAL CPS DEPENDENT VARIABLE CP

MACH (1) = .230 ALPHA (8) = 10.470

X/L	.050	.250	.500	.750	.950
X/LD					
.050	.2817	.2914	.3124	.3709	.5911
.500	.2837	.2776	.1923	.3180	.5189
.950	.1619	.3191	.3248	.2921	.2711

MACH (1) = .230 ALPHA (9) = 12.570

X/L	.050	.250	.500	.750	.950
X/LD					
.050	.3147	.3335	.3524	.4102	.6308
.500	.3153	.3093	.2262	.3665	.5534
.950	.1554	.3665	.3661	.3277	.3271

MACH (1) = .230 ALPHA (10) = 14.650

X/L	.050	.250	.500	.750	.950
X/LD					
.050	.3535	.3824	.3925	.4275	.6573
.500	.3407	.3407	.2546	.4000	.5886
.950	.1837	.4049	.4069	.3585	.3552

MACH (1) = .230 ALPHA (11) = 16.770

X/L	.050	.250	.500	.750	.950
X/LD					
.050	.4012	.4336	.4204	.4325	.6749
.500	.3736	.3756	.2883	.4258	.6102
.950	.2404	.4568	.4477	.3785	.3785

MACH (1) = .230 ALPHA (12) = 18.880

X/L	.050	.250	.500	.750	.950
X/LD					
.050	.4513	.4795	.4506	.4636	.6886
.500	.4123	.4090	.3150	.4510	.6208
.950	.3207	.5040	.4795	.4041	.4002

NAAL 737 OA143 ORB/B65-MAIN GEAR LT SDWALL CPS (RFCG35) (14 MAY 75)

REFERENCE DATA

SREF = 2690.0000 SQ.FT. XMRP = 1076.7000 IN.XO
LREF = 474.8000 IN. YMRP = .0000 IN.YO
BREF = 936.6800 IN. ZMRP = 375.0000 IN.ZO
SCALE = .0405

PARAMETRIC DATA

BETA = .000 BDFLAP = -11.700
ELEVON = 5.000 RUDDER = .000
SPDBRK = 25.000 GRDPLN = .000
LNGRPS = 1.000 LNDGDR = 100.000

SECTION (1)MN GR LT SWAL CPS DEPENDENT VARIABLE CP

MACH (1) = .230 ALPHA (1) = .030

X/L	.050	.250	.500	.750	.950
X/LD					
.050	-.0002	-.0775	-.0487	-.0533	.1641
.500	-.0273	-.0683	-.0927	-.1160	.0556
.950	-.0270	-.0575	-.1022	-.1045	-.0897

MACH (1) = .230 ALPHA (2) = 5.230

X/L	.050	.250	.500	.750	.950
X/LD					
.050	.1202	.0946	.0662	.0663	.1818
.500	.1125	.0736	.0628	.0538	.0535
.950	.0969	.0797	.0622	.0631	-.1159

MACH (1) = .230 ALPHA (3) = 10.470

X/L	.050	.250	.500	.750	.950
X/LD					
.050	.2940	.2057	.2114	.1548	.3495
.500	.2640	.2009	.1929	.1570	.1004
.950	.2373	.2185	.2053	.2260	.3574

MACH (1) = .230 ALPHA (4) = 15.750

X/L	.050	.250	.500	.750	.950
X/LD					
.050	.3644	.3250	.3044	.3142	.5919
.500	.3526	.3280	.2758	.3059	.5007
.950	.2960	.3327	.3240	.3429	.4076

MACH (1) = .230 ALPHA (5) = 18.910

X/L	.050	.250	.500	.750	.950
X/LD					
.050	.4007	.3902	.3899	.4231	.6597
.500	.3983	.3855	.3250	.4043	.5965
.950	.2862	.3983	.4081	.3947	.4032

NAAL 737 OA143 ORB/B65-MAIN GEAR LT SDWALL CPS (RFCG36) (14 MAY 75)

REFERENCE DATA

SREF = 2690.0000 SQ.FT. XMRP = 1076.7000 IN.XO
LREF = 474.8000 IN. YMRP = .0000 IN.YO
BREF = 936.6800 IN. ZMRP = 375.0000 IN.ZO
SCALE = .0405

PARAMETRIC DATA

BETA = -4.000 BDFLAP = -11.700
ELEVON = 5.000 RUDDER = .000
SPDBRK = 25.000 GRDPLN = .000
LNGRPS = 1.000 LNDGDR = 100.000

SECTION (1)MN GR LT SWAL CPS DEPENDENT VARIABLE CP

MACH (1) = .230 ALPHA (1) = .000

X/L	.050	.250	.500	.750	.950
X/LD					
.050	-.0772	-.1634	-.0938	-.0956	.1824
.500	-.0982	-.1433	-.1430	-.1720	.0823
.950	-.0050	-.1288	-.1800	-.1970	-.0067

MACH (1) = .230 ALPHA (2) = 5.260

X/L	.050	.250	.500	.750	.950
X/LD					
.050	.0815	.0021	.0217	.0261	.2186
.500	.0648	-.0005	-.0267	-.0213	.0913
.950	.0699	.0228	-.0151	-.0059	-.0597

MACH (1) = .230 ALPHA (3) = 10.490

X/L	.050	.250	.500	.750	.950
X/LD					
.050	.2286	.1737	.1595	.1554	.2972
.500	.2145	.1670	.1555	.1420	.1287
.950	.1821	.1768	.1585	.1614	-.0103

MACH (1) = .230 ALPHA (4) = 15.770

X/L	.050	.250	.500	.750	.950
X/LD					
.050	.3898	.3012	.3126	.2501	.4476
.500	.3599	.3035	.2907	.2553	.2029
.950	.3290	.3183	.3045	.3220	.5055

MACH (1) = .230 ALPHA (5) = 18.920

X/L	.050	.250	.500	.750	.950
X/LD					
.050	.4338	.3764	.3647	.3494	.6135
.500	.4103	.3798	.3513	.3566	.5156
.950	.3680	.3848	.3781	.4010	.4802

NAAL 737 OA143 ORB/B65-MAIN GEAR LT SDWALL CPS (RFCG37) (14 MAY 75)

REFERENCE DATA

SREF =	2690.0000 SQ.FT.	XMRP =	1076.7000 IN.XO		
LREF =	474.8000 IN.	YMRP =	.0000 IN.YO		
BREF =	936.6800 IN.	ZMRP =	375.0000 IN.ZO		
SCALE =	.0405				

PARAMETRIC DATA

BETA =	-8.000	BDFLAP =	-11.700
ELEVON =	5.000	RUDDER =	.000
SPDBRK =	25.000	GRDPLN =	.000
LNGRPS =	1.000	LNDGDR =	100.000

SECTION (1)MN GR LT SWAL CPS DEPENDENT VARIABLE CP

MACH (1) = .230 ALPHA (1) = .030

X/L	.050	.250	.500	.750	.950
X/LD					
.050	-.1276	-.2716	-.2075	-.2022	.1383
.500	-.1520	-.2672	-.2563	-.2784	-.0292
.950	-.1564	-.2526	-.2936	-.2702	-.1708

MACH (1) = .230 ALPHA (2) = 5.250

X/L	.050	.250	.500	.750	.950
X/LD					
.050	.0183	-.0493	-.0202	-.0226	.2493
.500	-.0002	-.0388	-.0527	-.0843	.1400
.950	.0095	-.0361	-.0873	-.0837	-.0229

MACH (1) = .230 ALPHA (3) = 10.510

X/L	.050	.250	.500	.750	.950
X/LD					
.050	.1772	.1085	.1237	.1260	.2782
.500	.1674	.1119	.0895	.0918	.1654
.950	.1735	.1271	.0983	.0975	.0118

MACH (1) = .230 ALPHA (4) = 15.790

X/L	.050	.250	.500	.750	.950
X/LD					
.050	.3401	.2768	.2603	.2544	.3950
.500	.3189	.2694	.2593	.2440	.2222
.950	.2977	.2846	.2644	.2709	.1832

MACH (1) = .230 ALPHA (5) = 18.950

X/L	.050	.250	.500	.750	.950
X/LD					
.050	.4287	.3493	.3493	.3093	.4751
.500	.3995	.3487	.3362	.3057	.2612
.950	.3837	.3662	.3500	.3629	.5158

NAAL 737 OA143 ORB/B65-MAIN GEAR LT SDWALL CPS (RFCG38) (14 MAY 75)

REFERENCE DATA

SREF = 2690.0000 SQ.FT. XMRP = 1076.7000 IN.XO
LREF = 474.8000 IN. YMRP = .0000 IN.YO
BREF = 936.6800 IN. ZMRP = 375.0000 IN.ZO
SCALE = .0405

PARAMETRIC DATA

BETA = 4.000 BDFLAP = -11.700
ELEVON = 5.000 RUDDER = .000
SPDBRK = 25.000 GRDPLN = .000
LNGRPS = 1.000 LNDGDR = 100.000

SECTION (1)MN GR LT SWAL CPS DEPENDENT VARIABLE CP

MACH (1) = .230 ALPHA (1) = .010

X/L	.050	.250	.500	.750	.950
X/LD					
.050	.0224	-.0104	-.0165	-.0160	.0868
.500	.0248	-.0222	-.0324	-.0368	-.0004
.950	.0197	-.0097	-.0287	-.0267	-.1606

MACH (1) = .230 ALPHA (2) = 5.240

X/L	.050	.250	.500	.750	.950
X/LD					
.050	.1737	.1054	.0931	.0657	.2452
.500	.1526	.1010	.0823	.0560	.0341
.950	.1329	.1122	.0952	.1093	.0854

MACH (1) = .230 ALPHA (3) = 10.090

X/L	.050	.250	.500	.750	.950
X/LD					
.050	.4101	.4331	.4392	.4614	.6622
.500	.3980	.3956	.3308	.4388	.6126
.950	.3096	.4442	.4466	.4024	.4115

MACH (1) = .230 ALPHA (4) = 10.460

X/L	.050	.250	.500	.750	.950
X/LD					
.050	.2379	.2240	.2173	.2257	.4418
.500	.2332	.2244	.1812	.2144	.3682
.950	.1836	.2298	.2278	.2273	.2783

MACH (1) = .230 ALPHA (5) = 15.730

X/L	.050	.250	.500	.750	.950
X/LD					
.050	.3431	.3458	.3606	.3995	.6110
.500	.3434	.3323	.2676	.3720	.5468
.950	.2272	.3630	.3758	.3422	.3852

NAAL 737 OA143 ORB/B65-MAIN GEAR LT SDWALL CPS (RFCG39) (14 MAY 75)

REFERENCE DATA

SREF = 2690.0000 SQ.FT. XMRP = 1076.7000 IN.XO
LREF = 474.8000 IN. YMRP = .0000 IN.YO
BREF = 936.6800 IN. ZMRP = 375.0000 IN.ZO
SCALE = .0405

PARAMETRIC DATA

BETA = 8.000 BDFLAP = -11.700
ELEVON = 5.000 RUDDER = .000
SPDBRK = 25.000 GRDPLN = .000
LNGRPS = 1.000 LNDGDR = 100.000

SECTION (1)MN GR LT SWAL CPS DEPENDENT VARIABLE CP

MACH (1) = .230 ALPHA (1) = .020

X/L	.050	.250	.500	.750	.950
X/LD					
.050	.0665	.0180	-.0033	-.0089	.1417
.500	.0489	.0051	-.0053	-.0251	-.0273
.950	.0363	.0143	-.0029	.0085	-.0755

MACH (1) = .230 ALPHA (2) = 5.250

X/L	.050	.250	.500	.750	.950
X/LD					
.050	.1753	.1519	.1408	.1602	.3474
.500	.1692	.1567	.1178	.1529	.2893
.950	.1303	.1651	.1644	.1769	.1660

MACH (1) = .230 ALPHA (3) = 10.460

X/L	.050	.250	.500	.750	.950
X/LD					
.050	.2790	.2915	.3097	.3641	.5882
.500	.2804	.2723	.1902	.3222	.5074
.950	.1389	.3174	.3241	.2920	.3159

MACH (1) = .230 ALPHA (4) = 15.740

X/L	.050	.250	.500	.750	.950
X/LD					
.050	.3737	.4077	.4054	.4360	.6660
.500	.3562	.3579	.2721	.4093	.5986
.950	.2078	.4309	.4256	.3686	.3853

MACH (1) = .230 ALPHA (5) = 18.890

X/L	.050	.250	.500	.750	.950
X/LD					
.050	.4518	.4784	.4538	.4700	.6937
.500	.4097	.4094	.3168	.4530	.6194
.950	.3259	.5066	.4824	.4068	.4208

NAAL 737 OA143 ORB/B67-MAIN GEAR LT SDWALL CPS (RFCG56) (14 MAY 75)

REFERENCE DATA

SREF =	2690.0000 SQ.FT.	XMRP =	1076.7000 IN.XO
LREF =	474.8000 IN.	YMRP =	.0000 IN.YO
BREF =	936.6800 IN.	ZMRP =	375.0000 IN.ZO
SCALE =	.0405		

PARAMETRIC DATA

BETA =	.000	BDFLAP =	-11.700
ELEVON =	5.000	RUDDER =	.000
SPDBRK =	25.000	GRDPLN =	.000
LNGRPS =	1.000	LNDGDR =	100.000

SECTION (1)MN GR LT SWAL CPS DEPENDENT VARIABLE CP

MACH (1) = .230 ALPHA (1) = -4.160

X/L	.050	.250	.500	.750	.950
X/LD					
.050	-.1314	-.2119	-.1538	-.1445	.1225
.500	-.1588	-.1944	-.1717	-.2200	.0558
.950	-.1504	-.1805	-.2204	-.2522	-.1369

MACH (1) = .230 ALPHA (2) = -2.080

X/L	.050	.250	.500	.750	.950
X/LD					
.050	-.0715	-.1466	-.0929	-.0968	.1521
.500	-.0983	-.1333	-.1306	-.1676	.0601
.950	-.0902	-.1248	-.1628	-.1890	-.0907

MACH (1) = .230 ALPHA (3) = .020

X/L	.050	.250	.500	.750	.950
X/LD					
.050	-.0050	-.0793	-.0393	-.0537	.1680
.500	-.0311	-.0695	-.0888	-.1187	.0480
.950	-.0345	-.0562	-.1048	-.1099	-.0995

MACH (1) = .230 ALPHA (4) = 2.110

X/L	.050	.250	.500	.750	.950
X/LD					
.050	.0441	-.0263	-.0043	-.0122	.1566
.500	.0305	-.0236	-.0476	-.0497	.0498
.950	.0315	-.0097	-.0415	-.0440	-.1157

MACH (1) = .230 ALPHA (5) = 4.200

X/L	.050	.250	.500	.750	.950
X/LD					
.050	.0819	.0504	.0403	.0416	.1512
.500	.0856	.0410	.0288	.0205	.0566
.950	.0866	.0518	.0328	.0241	-.1019

MACH (1) = .230 ALPHA (6) = 6.290

X/L	.050	.250	.500	.750	.950
X/LD					
.050	.1564	.1135	.0887	.0870	.2159
.500	.1399	.0948	.0850	.0772	.0610
.950	.1388	.1080	.0904	.0917	-.1061

MACH (1) = .230 ALPHA (7) = 8.400

X/L	.050	.250	.500	.750	.950
X/LD					
.050	.2281	.1479	.1452	.1190	.2786
.500	.2029	.1476	.1371	.1149	.0783
.950	.1897	.1665	.1513	.1583	.1534

NAAL 737 OA143 ORB/B67-MAIN GEAR LT SDWALL CPS (RFCG56)

SECTION (1)MN GR LT SWAL CPS DEPENDENT VARIABLE CP

MACH (1) = .230 ALPHA (8) = 10.490

X/L	.050	.250	.500	.750	.950
X/LD					
.050	.2934	.2047	.2125	.1519	.3498
.500	.2620	.2013	.1922	.1538	.1021
.950	.2404	.2192	.2064	.2209	.3708

MACH (1) = .230 ALPHA (9) = 12.590

X/L	.050	.250	.500	.750	.950
X/LD					
.050	.3495	.2582	.2821	.1990	.4562
.500	.3199	.2528	.2538	.2075	.1932
.950	.2653	.2612	.2491	.2805	.4841

MACH (1) = .230 ALPHA (10) = 14.700

X/L	.050	.250	.500	.750	.950
X/LD					
.050	.3556	.2986	.2821	.2632	.5621
.500	.3384	.3023	.2656	.2759	.4576
.950	.2261	.3067	.2902	.3186	.4292

MACH (1) = .230 ALPHA (11) = 16.800

X/L	.050	.250	.500	.750	.950
X/LD					
.050	.3673	.3464	.3353	.3496	.6178
.500	.3636	.3474	.2897	.3353	.5269
.950	.2547	.3508	.3430	.3521	.4155

MACH (1) = .230 ALPHA (12) = 18.910

X/L	.050	.250	.500	.750	.950
X/LD					
.050	.3944	.3894	.3877	.4213	.5542
.500	.3918	.3830	.3219	.4029	.5864
.950	.2624	.3971	.3948	.3889	.4076

NAAL 737 OA143 ORB/B67-MAIN GEAR LT SDWALL CPS (RFCG60) (14 MAY 75)

REFERENCE DATA

SREF = 2690.0000 SQ.FT. XMRP = 1076.7000 IN.XO
LREF = 474.8000 IN. YMRP = .0000 IN.YO
BREF = 936.6800 IN. ZMRP = 375.0000 IN.ZO
SCALE = .0405

PARAMETRIC DATA

BETA = 8.000 BDFLAP = -11.700
ELEVON = 5.000 RUDDER = .000
SPDBRK = 25.000 GRDPLN = .000
LNGRPS = 1.000 LNDGDR = 100.000

SECTION (1)MN GR LT SWAL CPS DEPENDENT VARIABLE CP

MACH (1) = .230 ALPHA (1) = -4.130

X/L	.050	.250	.500	.750	.950
X/LD					
.050	-.0273	-.0595	-.0707	-.0719	.0395
.500	-.0263	-.0744	-.0812	-.0941	-.0555
.950	-.0243	-.0629	-.0843	-.0854	-.1845

MACH (1) = .230 ALPHA (2) = -2.050

X/L	.050	.250	.500	.750	.950
X/LD					
.050	.0163	-.0131	-.0405	-.0421	.0918
.500	.0082	-.0341	-.0446	-.0590	-.0475
.950	.0044	-.0249	-.0439	-.0722	.1716

MACH (1) = .230 ALPHA (3) = .020

X/L	.050	.250	.500	.750	.950
X/LD					
.050	.0659	.0173	-.0012	-.0111	.1380
.500	.0479	.0065	-.0070	-.0251	-.0325
.950	.0408	.0156	-.0005	.0055	-.0762

MACH (1) = .230 ALPHA (4) = 2.120

X/L	.050	.250	.500	.750	.950
X/LD					
.050	.1146	.0546	.0427	.0167	.1795
.500	.0932	.0556	.0387	.0071	.0107
.950	.0732	.0624	.0468	.0537	.0765

MACH (1) = .230 ALPHA (5) = 4.180

X/L	.050	.250	.500	.750	.950
X/LD					
.050	.1610	.1216	.1192	.0928	.2815
.500	.1457	.1175	.1175	.0900	.1740
.950	.1009	.1236	.1080	.1282	.1592

MACH (1) = .230 ALPHA (6) = 6.290

X/L	.050	.250	.500	.750	.950
X/LD					
.050	.1930	.1886	.1953	.2214	.4159
.500	.1967	.1852	.1879	.1979	.3589
.950	.1067	.2075	.1383	.2034	.2101

MACH (1) = .230 ALPHA (7) = 8.380

X/L	.050	.250	.500	.750	.950
X/LD					
.050	.2381	.2448	.2556	.2929	.5159
.500	.2418	.2323	.2566	.2645	.4466
.950	.1095	.2610	.1665	.2477	.2631

NAAL 737 OA143 ORB/B67-MAIN GEAR LT SDWALL CPS (RFCG60)

SECTION (1)MN GR LT SWAL CPS DEPENDENT VARIABLE CP

MACH (1) = .230 ALPHA (8) = 9.020

X/L	.050	.250	.500	.750	.950
X/LD					
.050	.3947	.4269	.4222	.4304	.6755
.500	.3727	.3714	.2841	.4201	.5991
.950	.2137	.4455	.4320	.3695	.3955

MACH (1) = .230 ALPHA (9) = 10.480

X/L	.050	.250	.500	.750	.950
X/LD					
.050	.2763	.2908	.3117	.3708	.5871
.500	.2790	.2742	.1918	.3170	.5143
.950	.1092	.3070	.3107	.2849	.3148

MACH (1) = .230 ALPHA (10) = 12.590

X/L	.050	.250	.500	.750	.950
X/LD					
.050	.3103	.3343	.3501	.4168	.6284
.500	.3103	.3035	.2168	.3597	.5608
.950	.1160	.3478	.3569	.3174	.3475

MACH (1) = .230 ALPHA (11) = 14.680

X/L	.050	.250	.500	.750	.950
X/LD					
.050	.3500	.3787	.3905	.4325	.6498
.500	.3378	.3365	.2524	.3949	.5821
.950	.1540	.3943	.3912	.3430	.3654

MACH (1) = .230 ALPHA (12) = 18.890

X/L	.050	.250	.500	.750	.950
X/LD					
.050	.4489	.4759	.4529	.4659	.6841
.500	.4083	.4049	.3120	.4495	.6125
.950	.2988	.4942	.4705	.3960	.4181

NAAL 737 OA143 ORB/B66-MAIN GEAR TOP WALL CPS (RFCH01) (14 MAY 75)

REFERENCE DATA

SREF = 2690.0000 SQ.FT. XMRP = 1076.7000 IN.XO
LREF = 474.8000 IN. YMRP = .0000 IN.YO
BREF = 936.6800 IN. ZMRP = 375.0000 IN.ZO
SCALE = .0405

PARAMETRIC DATA

BETA = .000 BDFLAP = -11.700
ELEVON = 5.000 RUDDER = .000
SPDBRK = 25.000 GRDPLN = 1.000
LNGRPS = 1.000 LNDGDR = 100.000

SECTION (1)MN GR TOP WAL CPS DEPENDENT VARIABLE CP

MACH (1) = .200 ALPHA (1) = .010

X/L	.050	.250	.500	.750	.950
X/LW					
.050	-.0370	-.0513	-.0903	-.0903	.1465
.500	-.0576	-.0635	-.0870	-.1002	.0271
.950	-.0189	-.0673	-.0547	-.0669	.0976

MACH (1) = .200 ALPHA (2) = 5.380

X/L	.050	.250	.500	.750	.950
X/LW					
.050	.2724	.1982	.1929	.1867	.4075
.500	.2153	.1853	.1828	.1550	.3223
.950	.2449	.1845	.1957	.1663	.3506

MACH (1) = .200 ALPHA (3) = 10.710

X/L	.050	.250	.500	.750	.950
X/LW					
.050	.4199	.3667	.3777	.4317	.7048
.500	.3622	.3663	.3626	.3492	.5370
.950	.3863	.3809	.3829	.4144	.6453

MACH (1) = .200 ALPHA (4) = 16.140

X/L	.050	.250	.500	.750	.950
X/LW					
.050	.5442	.5467	.5585	.6020	.7751
.500	.5294	.5191	.5377	.5366	.6609
.950	.5537	.5863	.5484	.5710	.7317

MACH (1) = .200 ALPHA (5) = 19.380

X/L	.050	.250	.500	.750	.950
X/LW					
.050	.6431	.6575	.6677	.6778	.8060
.500	.6190	.6005	.6161	.6303	.7350
.950	.6534	.7271	.6255	.6764	.7748

NAAL 737 OA143 ORB/B66-MAIN GEAR TOP WALL CPS (RFCH02) (14 MAY 75)

REFERENCE DATA

SREF = 2690.0000 SQ.FT. XMRP = 1076.7000 IN.XO
LREF = 474.8000 IN. YMRP = .0000 IN.YO
BREF = 936.6800 IN. ZMRP = 375.0000 IN.ZO
SCALE = .0405

PARAMETRIC DATA

BETA = -4.000 BDFLAP = -11.700
ELEVON = 5.000 RUDDER = .000
SPDBRK = 25.000 GRDPLN = 1.000
LNGRPS = 1.000 LNDGDR = 100.000

SECTION (1)MN GR TOP WAL CPS DEPENDENT VARIABLE CP

MACH (1) = .200 ALPHA (1) = .010

X/L	.050	.250	.500	.750	.950
X/LW					
.050	-.1074	-.1376	-.1514	-.1379	.1342
.500	-.1774	-.1619	-.1363	-.1680	-.0009
.950	-.0935	-.1489	-.0956	-.0674	.1854

MACH (1) = .200 ALPHA (2) = 5.370

X/L	.050	.250	.500	.750	.950
X/LW					
.050	.1769	.1690	.1315	.1404	.2691
.500	.1698	.1582	.1328	.1329	.2565
.950	.1773	.1557	.1419	.1421	.2395

MACH (1) = .200 ALPHA (3) = 10.760

X/L	.050	.250	.500	.750	.950
X/LW					
.050	.4602	.3795	.3964	.3872	.6279
.500	.3708	.3612	.3812	.3413	.4726
.950	.4307	.3762	.3920	.3570	.5827

MACH (1) = .200 ALPHA (4) = 16.150

X/L	.050	.250	.500	.750	.950
X/LW					
.050	.5734	.5434	.5511	.6122	.7883
.500	.5328	.5365	.5488	.5531	.6776
.950	.5529	.5562	.5656	.6152	.7541

MACH (1) = .200 ALPHA (5) = 19.360

X/L	.050	.250	.500	.750	.950
X/LW					
.050	.6467	.6430	.6524	.7044	.8384
.500	.6320	.6258	.6508	.6518	.7513
.950	.6582	.6865	.6598	.6993	.8072

NAAL 737 OA143 ORB/B66-MAIN GEAR TOP WALL CPS (RFCH03) (14 MAY 75)

REFERENCE DATA

SREF = 2690.0000 SQ.FT. XMRP = 1076.7000 IN.XO
LREF = 474.8000 IN. YMRP = .0000 IN.YO
BREF = 936.6800 IN. ZMRP = 375.0000 IN.ZO
SCALE = .0405

PARAMETRIC DATA

BETA = -8.000 BDFLAP = -11.700
ELEVON = 5.000 RUDDER = .000
SPDBRK = 25.000 GRDPLN = 1.000
LNGRPS = 1.000 LNDGDR = 100.000

SECTION (1)MN GR TOP WAL CPS DEPENDENT VARIABLE CP

MACH (1) = .200 ALPHA (1) = .030

X/L	.050	.250	.500	.750	.950
X/LW					
.050	-.2956	-.2411	-.2592	-.1870	.2267
.500	-.3308	-.3447	-.3241	-.3012	-.0829
.950	-.3023	-.3111	-.2600	-.1273	.2533

MACH (1) = .200 ALPHA (2) = 5.380

X/L	.050	.250	.500	.750	.950
X/LW					
.050	.1214	.1097	.0729	.0572	.2872
.500	.1052	.0956	.0710	.0582	.2090
.950	.1434	.0956	.1064	.0994	.3015

MACH (1) = .200 ALPHA (3) = 10.760

X/L	.050	.250	.500	.750	.950
X/LW					
.050	.4150	.3591	.3387	.3516	.4908
.500	.3756	.3566	.3392	.3357	.4796
.950	.3947	.3442	.3446	.3448	.4593

MACH (1) = .200 ALPHA (4) = 16.170

X/L	.050	.250	.500	.750	.950
X/LW					
.050	.6038	.5442	.5556	.5796	.7668
.500	.5388	.5417	.5430	.5228	.6446
.950	.5699	.5467	.5425	.5644	.7377

MACH (1) = .200 ALPHA (5) = 19.400

X/L	.050	.250	.500	.750	.950
X/LW					
.050	.6658	.6342	.6409	.6873	.8278
.500	.6268	.6317	.6346	.6298	.7377
.950	.6469	.6428	.6457	.6789	.7996

NAAL 737 OA143 ORB/B66-MAIN GEAR TOP WALL CPS (RFCH04) (14 MAY 75 -)

REFERENCE DATA

SREF = 2690.0000 SQ.FT. XMRP = 1076.7000 IN.XO
LREF = 474.8000 IN. YMRP = .0000 IN.YO
BREF = 936.6800 IN. ZMRP = 375.0000 IN.ZO
SCALE = .0405

PARAMETRIC DATA

BETA = 4.000 BDFLAP = -11.700
ELEVON = 5.000 RUDDER = .000
SPDBRK = 25.000 GRDPLN = 1.000
LNGRPS = 1.000 LNDGDR = 100.000

SECTION (1)MN GR TOP WAL CPS DEPENDENT VARIABLE CP

MACH (1) = .200 ALPHA (1) = .000

X/L	.050	.250	.500	.750	.950
X/LW					
.050	.0532	-.0030	-.0246	-.0212	.1282
.500	.0140	-.0059	-.0293	-.0368	.1292
.950	.0320	-.0163	-.0243	-.0239	.1251

MACH (1) = .200 ALPHA (2) = 5.340

X/L	.050	.250	.500	.750	.950
X/LW					
.050	.2318	.1880	.1859	.2316	.4945
.500	.1859	.1859	.1746	.1528	.3301
.950	.2030	.1959	.1892	.2046	.4460

MACH (1) = .200 ALPHA (3) = 10.730

X/L	.050	.250	.500	.750	.950
X/LW					
.050	.4040	.4040	.4247	.4757	.6722
.500	.3886	.3741	.4098	.4051	.5435
.950	.4048	.4393	.4218	.4468	.6226

MACH (1) = .200 ALPHA (4) = 16.140

X/L	.050	.250	.500	.750	.950
X/LW					
.050	.5935	.6236	.6341	.6344	.7768
.500	.5572	.5324	.5510	.5848	.6861
.950	.5877	.7310	.5675	.6682	.7252

MACH (1) = .200 ALPHA (5) = 19.370

X/L	.050	.250	.500	.750	.950
X/LW					
.050	.6845	.7214	.7068	.6930	.8073
.500	.6349	.6062	.6263	.6508	.7463
.950	.7005	.8227	.6415	.7470	.7698

NAAL 737 OA143 ORB/B66-MAIN GEAR TOP WALL CPS (RFCH05) (14 MAY 75)

REFERENCE DATA

SREF =	2690.0000 SQ.FT.	XMRP =	1076.7000 IN.XO		
LREF =	474.8000 IN.	YMRP =	.0000 IN.YO		
BREF =	936.6800 IN.	ZMRP =	375.0000 IN.ZO		
SCALE =	.0405				

PARAMETRIC DATA

BETA =	8.000	BDFLAP =	-11.700
ELEVON =	5.000	RUDDER =	.000
SPDBRK =	25.000	GRDPLN =	1.000
LNGRPS =	1.000	LNDGDR =	100.000

SECTION (1)MN GR TOP WAL CPS DEPENDENT VARIABLE CP

MACH (1) = .200 ALPHA (1) = .030

X/L	.050	.250	.500	.750	.950
X/LW					
.050	.0764	.0182	.0109	.0014	.1735
.500	.0315	.0082	-.0046	-.0246	.1273
.950	.0535	.0069	.0057	-.0148	.1739

MACH (1) = .200 ALPHA (2) = 5.360

X/L	.050	.250	.500	.750	.950
X/LW					
.050	.2833	.2675	.2894	.3660	.6329
.500	.2446	.2408	.2800	.2696	.4679
.950	.2708	.2996	.2975	.3746	.5746

MACH (1) = .200 ALPHA (3) = 10.770

X/L	.050	.250	.500	.750	.950
X/LW					
.050	.4450	.4587	.4920	.5272	.7464
.500	.4172	.3915	.4321	.4510	.6075
.950	.4566	.5097	.4516	.5082	.6884

MACH (1) = .200 ALPHA (4) = 16.160

X/L	.050	.250	.500	.750	.950
X/LW					
.050	.6225	.6717	.6656	.6352	.7878
.500	.5602	.5156	.5552	.5843	.7027
.950	.6271	.8145	.5726	.7037	.7368

MACH (1) = .200 ALPHA (5) = 19.390

X/L	.050	.250	.500	.750	.950
X/LW					
.050	.6869	.7231	.7008	.6557	.8023
.500	.6256	.5948	.6289	.6278	.7387
.950	.7116	.8394	.6396	.7428	.7720

NAAL 737 OA143 ORB/B66-MAIN GEAR TOP WALL CPS (RFCH06) (14 MAY 75)

REFERENCE DATA

SREF = 2690.0000 SQ.FT. XMRP = 1076.7000 IN.XO
LREF = 474.8000 IN. YMRP = .0000 IN.YO
BREF = 936.6800 IN. ZMRP = 375.0000 IN.ZO
SCALE = .0405

PARAMETRIC DATA

BETA = .000 BDFLAP = -11.700
ELEVON = 10.000 RUDDER = .000
SPDBRK = 25.000 GRDPLN = 1.000
LNGRPS = 1.000 LNDGDR = 100.000

SECTION (1)MN GR TOP WAL CPS DEPENDENT VARIABLE CP

MACH (1) = .200 ALPHA (1) = .110

X/L	.050	.250	.500	.750	.950
X/LW					
.050	-.0022	-.0156	-.0534	-.0520	.1733
.500	-.0228	-.0278	-.0502	-.0599	.0591
.950	.0137	-.0329	-.0211	-.0333	.1150

MACH (1) = .200 ALPHA (2) = 5.470

X/L	.050	.250	.500	.750	.950
X/LW					
.050	.3026	.2268	.2252	.2181	.4460
.500	.2444	.2146	.2117	.1842	.3399
.950	.2749	.2113	.2264	.1975	.3810

MACH (1) = .200 ALPHA (3) = 10.840

X/L	.050	.250	.500	.750	.950
X/LW					
.050	.4347	.3884	.3903	.4545	.7150
.500	.3756	.3822	.3863	.3724	.5484
.950	.4000	.4016	.3954	.4399	.6565

MACH (1) = .200 ALPHA (4) = 16.230

X/L	.050	.250	.500	.750	.950
X/LW					
.050	.5614	.5647	.5754	.6190	.7854
.500	.5477	.5374	.5501	.5599	.6814
.950	.5676	.6155	.5700	.5974	.7489

MACH (1) = .200 ALPHA (5) = 19.450

X/L	.050	.250	.500	.750	.950
X/LW					
.050	.6577	.6775	.6858	.6970	.8164
.500	.6338	.6189	.6276	.6504	.7389
.950	.6647	.7452	.6457	.7017	.7810

NAAL 737 OA143 ORB/B66-MAIN GEAR TOP WALL CPS (RFCH07) (14 MAY 75)

REFERENCE DATA

SREF = 2690.0000 SQ.FT. XMRP = 1076.7000 IN.XO
LREF = 474.8000 IN. YMRP = .0000 IN.YO
BREF = 936.6800 IN. ZMRP = 375.0000 IN.ZO
SCALE = .0405

PARAMETRIC DATA

BETA = -4.000 BDFLAP = -11.700
ELEVON = 10.000 RUDDER = .000
SPDBRK = 25.000 GRDPLN = 1.000
LNGRPS = 1.000 LNDGDR = 100.000

SECTION (1)MN GR TOP WAL CPS DEPENDENT VARIABLE CP

MACH (1) = .200 ALPHA (1) = .130

X/L	.050	.250	.500	.750	.950
X/LW					
.050	-.0686	-.0996	-.1085	-.1068	.1537
.500	-.1431	-.1118	-.0979	-.1281	.0242
.950	-.0523	-.1072	-.0615	-.0446	.1997

MACH (1) = .200 ALPHA (2) = 5.470

X/L	.050	.250	.500	.750	.950
X/LW					
.050	.2066	.1921	.1561	.1711	.2877
.500	.2012	.1842	.1584	.1629	.2799
.950	.2041	.1842	.1671	.1708	.2646

MACH (1) = .200 ALPHA (3) = 10.870

X/L	.050	.250	.500	.750	.950
X/LW					
.050	.4848	.4036	.4240	.4080	.6478
.500	.3932	.3882	.4082	.3583	.4952
.950	.4519	.4002	.4173	.3811	.6008

MACH (1) = .200 ALPHA (4) = 16.240

X/L	.050	.250	.500	.750	.950
X/LW					
.050	.5927	.5683	.5778	.6302	.8034
.500	.5522	.5609	.5691	.5677	.6933
.950	.5757	.5824	.5857	.6322	.7683

MACH (1) = .200 ALPHA (5) = 19.450

X/L	.050	.250	.500	.750	.950
X/LW					
.050	.6657	.6620	.6717	.7143	.8448
.500	.6501	.6427	.6612	.6654	.7572
.950	.6686	.7014	.6731	.7022	.8149

NAAL 737 OA143 ORB/B66-MAIN GEAR TOP WALL CPS (RFCH08) (14 MAY 75)

REFERENCE DATA

SREF = 2690.0000 SQ.FT. XMRP = 1076.7000 IN.XO
LREF = 474.8000 IN. YMRP = .0000 IN.YO
BREF = 936.6800 IN. ZMRP = 375.0000 IN.ZO
SCALE = .0405

PARAMETRIC DATA

BETA = -8.000 BDFLAP = -11.700
ELEVON = 10.000 RUDDER = .000
SPDBRK = 25.000 GRDPLN = 1.000
LNGRPS = 1.000 LNDGDR = 100.000

SECTION (1)MN GR TOP WAL CPS DEPENDENT VARIABLE CP

MACH (1) = .200 ALPHA (1) = .120

X/L	.050	.250	.500	.750	.950
X/LW					
.050	-.1980	-.2068	-.2226	-.1694	.2516
.500	-.2906	-.3116	-.2831	-.2626	-.0541
.950	-.2474	-.2701	-.2202	-.0979	.2793

MACH (1) = .200 ALPHA (2) = 5.490

X/L	.050	.250	.500	.750	.950
X/LW					
.050	.1518	.1389	.1052	.0936	.3066
.500	.1389	.1293	.1051	.0902	.2365
.950	.1717	.1247	.1347	.1297	.3171

MACH (1) = .200 ALPHA (3) = 10.870

X/L	.050	.250	.500	.750	.950
X/LW					
.050	.4401	.3830	.3654	.3769	.5224
.500	.4000	.3788	.3643	.3599	.5072
.950	.4165	.3631	.3681	.3694	.4872

MACH (1) = .200 ALPHA (4) = 16.230

X/L	.050	.250	.500	.750	.950
X/LW					
.050	.6176	.5582	.5661	.5914	.7784
.500	.5528	.5553	.5540	.5367	.6572
.950	.5825	.5590	.5544	.5890	.7460

MACH (1) = .200 ALPHA (5) = 19.440

X/L	.050	.250	.500	.750	.950
X/LW					
.050	.6808	.6491	.6606	.6963	.8464
.500	.6396	.6412	.6507	.6467	.7520
.950	.6594	.6548	.6627	.6973	.8130

NAAL 737 OA143 ORB/B66-MAIN GEAR TOP WALL CPS (RFCH09) (14 MAY 75)

REFERENCE DATA

SREF = 2690.0000 SQ.FT. XMRP = 1076.7000 IN.XO
LREF = 474.8000 IN. YMRP = .0000 IN.YO
BREF = 936.6800 IN. ZMRP = 375.0000 IN.ZO
SCALE = .0405

PARAMETRIC DATA

BETA = 4.000 BDFLAP = -11.700
ELEVON = 10.000 RUDDER = .000
SPDBRK = 25.000 GRDPLN = 1.000
LNGRPS = 1.000 LNDGDR = 100.000

SECTION (1)MN GR TOP WAL CPS DEPENDENT VARIABLE CP

MACH (1) = .200 ALPHA (1) = .110

X/L	.050	.250	.500	.750	.950
X/LW					
.050	.0870	.0278	.0103	.0130	.1661
.500	.0457	.0253	.0028	-.0056	.1610
.950	.0657	.0115	.0107	.0055	.1620

MACH (1) = .200 ALPHA (2) = 5.450

X/L	.050	.250	.500	.750	.950
X/LW					
.050	.2526	.2118	.2128	.2649	.4977
.500	.2122	.2097	.2043	.1951	.3551
.950	.2252	.2227	.2152	.2404	.4603

MACH (1) = .200 ALPHA (3) = 10.830

X/L	.050	.250	.500	.750	.950
X/LW					
.050	.4242	.4251	.4413	.4883	.6725
.500	.4081	.3990	.4267	.4247	.5495
.950	.4259	.4635	.4400	.4568	.6347

MACH (1) = .200 ALPHA (4) = 16.230

X/L	.050	.250	.500	.750	.950
X/LW					
.050	.6090	.6425	.6473	.6463	.7814
.500	.5727	.5503	.5636	.5959	.6932
.950	.6032	.7446	.5813	.6773	.7317

MACH (1) = .200 ALPHA (5) = 19.440

X/L	.050	.250	.500	.750	.950
X/LW					
.050	.6994	.7327	.7183	.7031	.8210
.500	.6462	.6170	.6301	.6624	.7530
.950	.7113	.8316	.6512	.7560	.7802

NAAL 737 OA143 ORB/B66-MAIN GEAR TOP WALL CPS (RFCH10) (14 MAY 75)

REFERENCE DATA

SREF = 2690.0000 SQ.FT. XMRP = 1076.7000 IN.XO
LREF = 474.8000 IN. YMRP = .0000 IN.YO
BREF = 936.6800 IN. ZMRP = 375.0000 IN.ZO
SCALE = .0405

PARAMETRIC DATA

BETA = 8.000 BDFLAP = -11.700
ELEVON = 10.000 RUDDER = .000
SPDBRK = 25.000 GRDPLN = 1.000
LNGRPS = 1.000 LNDGDR = 100.000

SECTION (1)MN GR TOP WAL CPS DEPENDENT VARIABLE CP

MACH (1) = .200 ALPHA (1) = .110

X/L	.050	.250	.500	.750	.950
X/LW					
.050	.1040	.0467	.0380	.0312	.2062
.500	.0584	.0350	.0266	.0059	.1474
.950	.0793	.0350	.0392	.0127	.2028

MACH (1) = .200 ALPHA (2) = 5.430

X/L	.050	.250	.500	.750	.950
X/LW					
.050	.3008	.2904	.3082	.3880	.6456
.500	.2695	.2624	.2971	.2891	.4825
.950	.2987	.3300	.3159	.3907	.5801

MACH (1) = .200 ALPHA (3) = 10.830

X/L	.050	.250	.500	.750	.950
X/LW					
.050	.4648	.4831	.5155	.5465	.7622
.500	.4378	.4111	.4428	.4761	.6251
.950	.4765	.5435	.4686	.5458	.7003

MACH (1) = .200 ALPHA (4) = 16.230

X/L	.050	.250	.500	.750	.950
X/LW					
.050	.6303	.6793	.6619	.6441	.7940
.500	.5697	.5309	.5659	.5925	.7094
.950	.6435	.8261	.5800	.7162	.7425

MACH (1) = .200 ALPHA (5) = 19.430

X/L	.050	.250	.500	.750	.950
X/LW					
.050	.6929	.7316	.7132	.6647	.8097
.500	.6340	.6040	.6344	.6361	.7481
.950	.7167	.8418	.6443	.7528	.7747

NAAL 737 OA143 ~~ORD/2SS~~-MAIN GEAR TOP WALL CPS (RFCH11) (14 MAY 75)

REFERENCE DATA

SREF = 2690.0000 SQ.FT. XMRP = 1076.7000 IN.XO
LREF = 474.8000 IN. YMRP = .0000 IN.YO
BREF = 936.6800 IN. ZMRP = 375.0000 IN.ZO
SCALE = .0405

PARAMETRIC DATA

BETA = .000 BDFLAP = -11.700
ELEVON = 15.000 RUDDER = .000
SPDBRK = 25.000 GRDPLN = 1.000
LNGRPS = 1.000 LNDGDR = 100.000

SECTION (1)MN GR TOP WAL CPS DEPENDENT VARIABLE CP

MACH (1) = .200 ALPHA (1) = . .190

X/L	.050	.250	.500	.750	.950
X/LW					
.050	.0287	.0162	-.0223	-.0193	.1842
.500	.0107	.0024	-.0160	-.0210	.0897
.950	.0421	-.0026	.0082	-.0036	.1311

MACH (1) = .200 ALPHA (2) = 5.560

X/L	.050	.250	.500	.750	.950
X/LW					
.050	.3322	.2515	.2478	.2427	.4853
.500	.2653	.2385	.2385	.2075	.3527
.950	.2987	.2390	.2507	.2194	.4145

MACH (1) = .200 ALPHA (3) = 10.920

X/L	.050	.250	.500	.750	.950
X/LW					
.050	.4569	.4074	.4179	.4754	.7261
.500	.3995	.4045	.4086	.3937	.5737
.950	.4232	.4244	.4249	.4645	.6652

MACH (1) = .200 ALPHA (4) = 16.300

X/L	.050	.250	.500	.750	.950
X/LW					
.050	.5787	.5824	.5924	.6322	.7929
.500	.5630	.5502	.5667	.5749	.6865
.950	.5877	.6228	.5832	.6140	.7491

MACH (1) = .200 ALPHA (5) = 19.510

X/L	.050	.250	.500	.750	.950
X/LW					
.050	.6652	.6783	.6836	.6987	.8126
.500	.6399	.6206	.6382	.6545	.7451
.950	.6701	.7458	.6460	.7040	.7805

NAAL 737 OA143 ORB/B66-MAIN GEAR TOP WALL CPS (RFCH12) (14 MAY 75)

REFERENCE DATA

SREF =	2690.0000 SQ.FT.	XMRP =	1076.7000 IN.XO		
LREF =	474.8000 IN.	YMRP =	.0000 IN.YO		
BREF =	936.6800 IN.	ZMRP =	375.0000 IN.ZO		
SCALE =	.0405				

PARAMETRIC DATA

BETA =	-4.000	BDFLAP =	-11.700
ELEVON =	15.000	RUDDER =	.000
SPDBRK =	25.000	GRDPLN =	1.000
LNGRPS =	1.000	LNDGDR =	100.000

SECTION (1)MN GR TOP WAL CPS DEPENDENT VARIABLE CP

MACH (1) = .200 ALPHA (1) = .200

X/L	.050	.250	.500	.750	.950
X/LW					
.050	-.0395	-.0613	-.0814	-.0827	.1665
.500	-.1126	-.0857	-.0701	-.1031	.0513
.950	-.0189	-.0764	-.0282	-.0216	.2181

MACH (1) = .200 ALPHA (2) = 5.570

X/L	.050	.250	.500	.750	.950
X/LW					
.050	.2384	.2099	.1872	.2015	.3104
.500	.2279	.2099	.1861	.1909	.3131
.950	.2313	.2133	.1932	.1974	.2981

MACH (1) = .200 ALPHA (3) = 10.970

X/L	.050	.250	.500	.750	.950
X/LW					
.050	.5022	.4232	.4422	.4361	.6688
.500	.4137	.4075	.4286	.3801	.5163
.950	.4706	.4232	.4382	.4015	.6283

MACH (1) = .200 ALPHA (4) = 16.300

X/L	.050	.250	.500	.750	.950
X/LW					
.050	.6145	.5822	.6007	.6440	.8165
.500	.5710	.5735	.5880	.5898	.7115
.950	.5913	.6004	.6054	.6488	.7792

MACH (1) = .200 ALPHA (5) = 19.500

X/L	.050	.250	.500	.750	.950
X/LW					
.050	.6749	.6737	.6894	.7297	.8518
.500	.6622	.6544	.6758	.6823	.7718
.950	.6861	.7157	.6819	.7223	.8286

NAAL 737 OA143 ORB/B66-MAIN GEAR TOP WALL CPS (RFCH13) (14 MAY 75)

REFERENCE DATA

SREF = 2690.0000 SQ.FT. XMRP = 1076.7000 IN.XO
LREF = 474.8000 IN. YMRP = .0000 IN.YO
BREF = 936.6800 IN. ZMRP = 375.0000 IN.ZO
SCALE = .0405

PARAMETRIC DATA

BETA = -8.000 BDFLAP = -11.700
ELEVON = 15.000 RUDDER = .000
SPDBRK = 25.000 GRDPLN = 1.000
LNGRPS = 1.000 LNDGDR = 100.000

SECTION (1)MN GR TOP WAL CPS DEPENDENT VARIABLE CP

MACH (1) = .200 ALPHA (1) = .210

X/L	.050	.250	.500	.750	.950
X/LW					
.050	-.2143	-.1636	-.1596	-.1416	.1659
.500	-.2544	-.1846	-.1569	-.1812	-.0165
.950	-.1164	-.1728	-.1130	-.0750	.2835

MACH (1) = .200 ALPHA (2) = 5.500

X/L	.050	.250	.500	.750	.950
X/LW					
.050	.1839	.1680	.1355	.1273	.3374
.500	.1647	.1563	.1359	.1232	.2620
.950	.2005	.1505	.1626	.1563	.3322

MACH (1) = .200 ALPHA (3) = 10.970

X/L	.050	.250	.500	.750	.950
X/LW					
.050	.4741	.4095	.3921	.4030	.5646
.500	.4310	.4057	.3937	.3840	.5371
.950	.4476	.3908	.3978	.3935	.5209

MACH (1) = .200 ALPHA (4) = 16.340

X/L	.050	.250	.500	.750	.950
X/LW					
.050	.6242	.5733	.5848	.6170	.7926
.500	.5683	.5721	.5762	.5615	.6782
.950	.5961	.5766	.5745	.6028	.7595

MACH (1) = .200 ALPHA (5) = 19.520

X/L	.050	.250	.500	.750	.950
X/LW					
.050	.6910	.6550	.6683	.7050	.8491
.500	.6527	.6543	.6618	.6613	.7639
.950	.6671	.6700	.6708	.7074	.8198

NAAL 737 OA143 ORB/B66-MAIN GEAR TOP WALL CPS (RFCH14) (14 MAY 75)

REFERENCE DATA

SREF = 2690.0000 SQ.FT. XMRP = 1076.7000 IN.XO
LREF = 474.8000 IN. YMRP = .0000 IN.YO
BREF = 936.6800 IN. ZMRP = 375.0000 IN.ZO
SCALE = .0405

PARAMETRIC DATA

BETA = 4.000 BDFLAP = -11.700
ELEVON = 15.000 RUDDER = .000
SPDBRK = 25.000 GRDPLN = 1.000
LNGRPS = 1.000 LNDGDR = 100.000

SECTION (1)MN GR TOP WAL CPS DEPENDENT VARIABLE CP

MACH (1) = .200 ALPHA (1) = .170

X/L	.050	.250	.500	.750	.950
X/LW					
.050	.1170	.0572	.0414	.0442	.2087
.500	.0768	.0530	.0325	.0230	.1929
.950	.0940	.0400	.0396	.0346	.1854

MACH (1) = .200 ALPHA (2) = 5.550

X/L	.050	.250	.500	.750	.950
X/LW					
.050	.2706	.2360	.2384	.2903	.5058
.500	.2343	.2335	.2310	.2183	.3687
.950	.2460	.2460	.2464	.2667	.4700

MACH (1) = .200 ALPHA (3) = 10.910

X/L	.050	.250	.500	.750	.950
X/LW					
.050	.4445	.4454	.4663	.5099	.6971
.500	.4287	.4154	.4445	.4442	.5732
.950	.4491	.4874	.4574	.4881	.6521

MACH (1) = .200 ALPHA (4) = 16.300

X/L	.050	.250	.500	.750	.950
X/LW					
.050	.6212	.6513	.6560	.6550	.7772
.500	.5837	.5615	.5722	.6042	.7001
.950	.6159	.7468	.5912	.6850	.7361

MACH (1) = .200 ALPHA (5) = 19.500

X/L	.050	.250	.500	.750	.950
X/LW					
.050	.7062	.7372	.7292	.7073	.8294
.500	.6584	.6307	.6534	.6712	.7572
.950	.7215	.8379	.6658	.7633	.7825

NAAL 737 OA143 ORB/B66-MAIN GEAR TOP WALL CPS (RFCH15) (14 MAY 75)

REFERENCE DATA

SREF =	2690.0000 SQ.FT.	XMRP =	1076.7000 IN.XO		
LREF =	474.8000 IN.	YMRP =	.0000 IN.YO		
BREF =	936.6800 IN.	ZMRP =	375.0000 IN.ZO		
SCALE =	.0405				

PARAMETRIC DATA

BETA =	8.000	BDFLAP =	-11.700
ELEVON =	15.000	RUDDER =	.000
SPDBRK =	25.000	GRDPLN =	1.000
LNGRPS =	1.000	LNDGDR =	100.000

SECTION (1)MN GR TOP WAL CPS DEPENDENT VARIABLE CP

MACH (1) = .200 ALPHA (1) = .200

X/L	.050	.250	.500	.750	.950
X/LW					
.050	.1321	.0762	.0689	.0635	.2428
.500	.0845	.0666	.0607	.0348	.1681
.950	.1079	.0657	.0687	.0451	.2291

MACH (1) = .200 ALPHA (2) = 5.550

X/L	.050	.250	.500	.750	.950
X/LW					
.050	.3231	.3152	.3381	.4115	.6614
.500	.3002	.2847	.3190	.3176	.5057
.950	.3202	.3549	.3407	.4104	.5999

MACH (1) = .200 ALPHA (3) = 10.930

X/L	.050	.250	.500	.750	.950
X/LW					
.050	.4881	.5055	.5410	.5600	.7658
.500	.4604	.4306	.4600	.4970	.6429
.950	.4960	.5792	.4848	.5738	.7079

MACH (1) = .200 ALPHA (4) = 16.300

X/L	.050	.250	.500	.750	.950
X/LW					
.050	.6448	.6869	.6813	.6553	.7995
.500	.5807	.5402	.5815	.6056	.7184
.950	.6576	.8275	.5981	.7225	.7478

MACH (1) = .200 ALPHA (5) = 19.510

X/L	.050	.250	.500	.750	.950
X/LW					
.050	.7002	.7367	.7113	.6724	.8113
.500	.6456	.6128	.6440	.6443	.7509
.950	.7273	.8417	.6514	.7553	.7784

NAAL 737 OA143 ORB/B66-MAIN GEAR TOP WALL CPS (RFCH16) (14 MAY 75)

REFERENCE DATA

SREF =	2690.0000 SQ.FT.	XMRP =	1076.7000 IN.XO		
LREF =	474.8000 IN.	YMRP =	.0000 IN.YO		
BREF =	936.6800 IN.	ZMRP =	375.0000 IN.ZO		
SCALE =	.0405				

PARAMETRIC DATA

BETA =	.000	BDFLAP =	-11.700
ELEVON =	15.000	RUDDER =	.000
SPDBRK =	25.000	GRDPLN =	.000
LNGRPS =	1.000	LNDGDR =	100.000

SECTION (1)MN GR TOP WAL CPS DEPENDENT VARIABLE CP

MACH (1) = .230 ALPHA (1) = .120

X/L	.050	.250	.500	.750	.950
X/LW					
.050	-.0026	-.0142	-.0459	-.0467	.2018
.500	-.0411	-.0333	-.0479	-.0583	.0658
.950	.0259	-.0305	-.0009	-.0170	.1724

MACH (1) = .230 ALPHA (2) = 5.370

X/L	.050	.250	.500	.750	.950
X/LW					
.050	.1663	.1202	.0955	.1096	.2324
.500	.1427	.1212	.0969	.1015	.2404
.950	.1521	.1181	.1023	.1123	.2374

MACH (1) = .230 ALPHA (3) = 10.620

X/L	.050	.250	.500	.750	.950
X/LW					
.050	.3469	.2489	.2474	.2409	.5408
.500	.2697	.2349	.2395	.2019	.3656
.950	.3113	.2359	.2523	.2159	.4336

MACH (1) = .230 ALPHA (4) = 15.880

X/L	.050	.250	.500	.750	.950
X/LW					
.050	.4121	.3422	.3513	.3960	.6939
.500	.3362	.3362	.3355	.3027	.5082
.950	.3652	.3520	.3382	.3783	.6287

MACH (1) = .230 ALPHA (5) = 19.030

X/L	.050	.250	.500	.750	.950
X/LW					
.050	.4466	.4012	.4170	.4843	.7457
.500	.3881	.3958	.4076	.4022	.5911
.950	.4167	.4190	.4231	.4826	.6765

NAAL 737 OA143 ORB/B66-MAIN GEAR TOP WALL CPS (RFCH17) (14 MAY 75)

REFERENCE DATA

SREF =	2690.0000 SQ.FT.	XMRP =	1076.7000 IN.XO
LREF =	474.8000 IN.	YMRP =	.0000 IN.YO
BREF =	936.6800 IN.	ZMRP =	375.0000 IN.ZO
SCALE =	.0405		

PARAMETRIC DATA

BETA =	-4.000	BDFLAP =	-11.700
ELEVON =	15.000	RUDDER =	.000
SPDBRK =	25.000	SRDPLN =	.000
LNGRPS =	1.000	LNDGOR =	100.000

SECTION (1)MN GR TOP WAL CPS DEPENDENT VARIABLE CP

MACH (1) = .230 ALPHA (1) = .130

X/L	.050	.250	.500	.750	.950
X/LW					
.050	-.0613	-.0922	-.0833	-.1310	.1358
.500	-.1547	-.1214	-.0905	-.1376	.0368
.950	-.0375	-.1048	-.0464	-.0572	.1933

MACH (1) = .230 ALPHA (2) = 5.410

X/L	.050	.250	.500	.750	.950
X/LW					
.050	.0936	.0753	.0393	.0418	.2731
.500	.0686	.0615	.0419	.0374	.1761
.950	.1081	.0544	.0672	.0598	.2192

MACH (1) = .230 ALPHA (3) = 10.640

X/L	.050	.250	.500	.750	.950
X/LW					
.050	.2827	.2172	.1909	.2088	.3694
.500	.2405	.2158	.1929	.1931	.3526
.950	.2597	.1979	.1976	.2066	.3542

MACH (1) = .230 ALPHA (4) = 15.910

X/L	.050	.250	.500	.750	.950
X/LW					
.050	.4333	.3437	.3526	.3429	.6147
.500	.3413	.3224	.3437	.2982	.4549
.950	.3992	.3359	.3562	.3217	.5389

MACH (1) = .230 ALPHA (5) = 19.060

X/L	.050	.250	.500	.750	.950
X/LW					
.050	.4706	.3977	.4111	.4439	.7123
.500	.3890	.3930	.4038	.3647	.5374
.950	.4303	.4041	.4055	.4199	.6637

NAAL 737 OA143 ORB/B66-MAIN GEAR TOP WALL CPS (RFCH18) (14 MAY 75)

REFERENCE DATA

SREF =	2690.0000 SQ.FT.	XMRP =	1076.7000 IN.XO
LREF =	474.8000 IN.	YMRP =	.0000 IN.YO
BREF =	938.6800 IN.	ZMRP =	375.0000 IN.ZO
SCALE =	.0405		

PARAMETRIC DATA

BETA =	-8.000	BDFLAP =	-11.700
ELEVON =	15.000	RUDDER =	.000
SPDBRK =	25.000	GROPLN =	.000
LNGRPS =	1.000	LNDGDR =	100.000

SECTION (1)MN GR TOP WAL CPS DEPENDENT VARIABLE CP

MACH (1) = .230 ALPHA (1) = .140

X/L	.050	.250	.500	.750	.950
X/LW					
.050	-.1298	-.1689	-.1946	-.2275	.1056
.500	-.1797	-.1824	-.2079	-.2212	-.0089
.950	-.0959	-.1943	-.1560	-.1606	.1415

MACH (1) = .230 ALPHA (2) = 5.420

X/L	.050	.250	.500	.750	.950
X/LW					
.050	.0318	.0162	-.0190	-.0395	.1892
.500	.0054	.0027	-.0235	-.0365	.1250
.950	.0584	.0058	.0210	.0126	.2379

MACH (1) = .230 ALPHA (3) = 10.650

X/L	.050	.250	.500	.750	.950
X/LW					
.050	.1985	.1823	.1493	.1531	.3444
.500	.1796	.1705	.1505	.1490	.2815
.950	.2043	.1678	.1630	.1668	.2851

MACH (1) = .230 ALPHA (4) = 15.920

X/L	.050	.250	.500	.750	.950
X/LW					
.050	.3854	.3172	.2930	.3101	.4839
.500	.3415	.3162	.2950	.2911	.4607
.950	.3631	.2963	.2990	.3016	.4505

MACH (1) = .230 ALPHA (5) = 19.070

X/L	.050	.250	.500	.750	.950
X/LW					
.050	.4730	.3912	.3796	.3768	.6244
.500	.4148	.3831	.3751	.3501	.5191
.950	.4400	.3768	.3906	.3584	.5460

NAAL 737 OA143 ORB/B66-MAIN GEAR TOP WALL CPS (RFCH19) (14 MAY 75)

REFERENCE DATA

SREF =	2690.0000 SQ.FT.	XMRP =	1076.7000 IN.XO		
LREF =	474.8000 IN.	YMRP =	.0000 IN.YO		
BREF =	936.6800 IN.	ZMRP =	375.0000 IN.ZO		
SCALE =	.0405				

PARAMETRIC DATA

BETA =	4.000	BDFLAP =	-11.700
ELEVON =	15.000	RUDDER =	.000
SPDBRK =	25.000	GRDPLN =	.000
LNGRPS =	1.000	LNDGDR =	100.000

SECTION (1)MN GR TOP WAL CPS DEPENDENT VARIABLE CP

MACH (1) = .230 ALPHA (1) = .150

X/L	.050	.250	.500	.750	.950
X/LW					
.050	.0541	.0500	.0093	.0208	.1429
.500	.0500	.0345	.0092	.0148	.1279
.950	.0538	.0362	.0190	.0216	.1186

MACH (1) = .230 ALPHA (2) = 5.360

X/L	.050	.250	.500	.750	.950
X/LW					
.050	.2155	.1444	.1309	.1328	.3444
.500	.1660	.1397	.1214	.1038	.2707
.950	.1863	.1295	.1305	.1142	.3053

MACH (1) = .230 ALPHA (3) = 10.620

X/L	.050	.250	.500	.750	.950
X/LW					
.050	.2847	.2496	.2557	.3061	.5123
.500	.2412	.2453	.2469	.2350	.3789
.950	.2577	.2574	.2581	.2868	.4828

MACH (1) = .230 ALPHA (4) = 15.860

X/L	.050	.250	.500	.750	.950
X/LW					
.050	.3902	.3630	.3833	.4546	.6813
.500	.3436	.3493	.3761	.3770	.5301
.950	.3677	.3818	.3869	.4437	.6297

MACH (1) = .230 ALPHA (5) = 19.040

X/L	.050	.250	.500	.750	.950
X/LW					
.050	.4397	.4370	.4642	.5201	.7224
.500	.4236	.4085	.4464	.4475	.5881
.950	.4407	.4809	.4618	.5009	.6774

NAAL 737 OA143 ORB/B66-MAIN GEAR TOP WALL CPS (RFCH20) (14 MAY 75)

REFERENCE DATA

SREF = 2690.0000 SQ.FT. XMRP = 1076.7000 IN.XO
LREF = 474.8000 IN. YMRP = .0000 IN.YO
BREF = 936.6800 IN. ZMRP = 375.0000 IN.ZO
SCALE = .0405

PARAMETRIC DATA

BETA = 8.000 BDFLAP = -11.700
ELEVON = 15.000 RUDDER = .000
SPDBRK = 25.000 GRDPLN = .000
LNGRPS = 1.000 LNDGDR = 100.000

SECTION (1)MN GR TOP WAL CPS DEPENDENT VARIABLE CP

MACH (1) = .230 ALPHA (1) = .130

X/L	.050	.250	.500	.750	.950
X/LW					
.050	.1025	.0459	.0245	.0379	.1806
.500	.0647	.0432	.0213	.0213	.1661
.950	.0822	.0351	.0293	.0313	.1823

MACH (1) = .230 ALPHA (2) = 5.350

X/L	.050	.250	.500	.750	.950
X/LW					
.050	.2160	.1725	.1827	.2277	.4183
.500	.1644	.1681	.1728	.1599	.2947
.950	.1826	.1806	.1806	.2189	.3921

MACH (1) = .230 ALPHA (3) = 10.610

X/L	.050	.250	.500	.750	.950
X/LW					
.050	.3294	.3009	.3261	.3985	.6510
.500	.2720	.2824	.3176	.3157	.4943
.950	.3079	.3237	.3327	.3964	.5961

MACH (1) = .230 ALPHA (4) = 15.840

X/L	.050	.250	.500	.750	.950
X/LW					
.050	.4054	.4054	.4423	.5032	.7436
.500	.3852	.3646	.4152	.4109	.5917
.950	.4142	.4658	.4277	.4665	.6837

MACH (1) = .230 ALPHA (5) = 19.010

X/L	.050	.250	.500	.750	.950
X/LW					
.050	.4682	.4827	.5249	.5532	.7697
.500	.4355	.4095	.4550	.4866	.6323
.950	.4887	.5598	.4827	.5469	.7058

NAAL 737 OA143 ORB/866-MAIN GEAR TOP WALL CPS (RFCH21) (14 MAY 75)

REFERENCE DATA

SREF = 2690.0000 SQ.FT. XMRP = 1076.7000 IN.XO
LREF = 474.8000 IN. YMRP = .0000 IN.YO
BREF = 936.6800 IN. ZMRP = 375.0000 IN.ZO
SCALE = .0405

PARAMETRIC DATA

BETA = .000 BDFLAP = -11.700
ELEVON = 10.000 RUDDER = .000
SPDBRK = 25.000 GRDPLN = .000
LNGRPS = 1.000 LNDGDR = 100.000

SECTION (1)MN GR TOP WAL CPS DEPENDENT VARIABLE CP

MACH (1) = .230 ALPHA (1) = .080

X/L	.050	.250	.500	.750	.950
X/LW					
.050	-.0171	-.0283	-.0622	-.0693	.1892
.500	-.0682	-.0492	-.0597	-.0767	.0528
.950	.0129	-.0438	-.0205	-.0321	.1689

MACH (1) = .230 ALPHA (2) = 5.340

X/L	.050	.250	.500	.750	.950
X/LW					
.050	.1473	.1070	.0807	.0960	.2217
.500	.1283	.1083	.0826	.0884	.2208
.950	.1374	.1094	.0907	.0995	.2159

MACH (1) = .230 ALPHA (3) = 10.550

X/L	.050	.250	.500	.750	.950
X/LW					
.050	.3290	.2333	.2311	.2237	.5126
.500	.2582	.2212	.2189	.1889	.3612
.950	.2924	.2186	.2357	.2029	.4155

MACH (1) = .230 ALPHA (4) = 15.810

X/L	.050	.250	.500	.750	.950
X/LW					
.050	.4009	.3275	.3367	.3854	.6895
.500	.3248	.3278	.3227	.2910	.5027
.950	.3606	.3410	.3285	.3668	.6305

MACH (1) = .230 ALPHA (5) = 18.980

X/L	.050	.250	.500	.750	.950
X/LW					
.050	.4387	.3936	.4000	.4757	.7533
.500	.3801	.3872	.3959	.3950	.5922
.950	.4044	.4091	.4118	.4708	.6776

NAAL 737 OA143 ORB/B66-MAIN GEAR TOP WALL CPS (RFCH22) (14 MAY 75)

REFERENCE DATA

SREF =	2690.0000 SQ.FT.	XMRP =	1076.7000 IN.XO		
LREF =	474.8000 IN.	YMRP =	.0000 IN.YO		
BREF =	936.6800 IN.	ZMRP =	375.0000 IN.ZO		
SCALE =	.0405				

PARAMETRIC DATA

BETA =	-4.000	BDFLAP =	-11.700
ELEVON =	10.000	RUDDER =	.000
SPDBRK =	25.000	GRDPLN =	.000
LNGRPS =	1.000	LNDGDR =	100.000

SECTION (1)MN GR TOP WAL CPS DEPENDENT VARIABLE CP

MACH (1) = .230 ALPHA (1) = .090

X/L	.050	.250	.500	.750	.950
X/LW					
.050	-.0695	-.1110	-.1064	-.1331	.1307
.500	-.1745	-.1402	-.1140	-.1501	.0245
.950	-.0478	-.1205	-.0794	-.0636	.1946

MACH (1) = .230 ALPHA (2) = 5.300

X/L	.050	.250	.500	.750	.950
X/LW					
.050	.0746	.0573	.0208	.0236	.2714
.500	.0529	.0444	.0227	.0189	.1548
.950	.0946	.0370	.0512	.0444	.2154

MACH (1) = .230 ALPHA (3) = 10.570

X/L	.050	.250	.500	.750	.950
X/LW					
.050	.2603	.2023	.1748	.1931	.3472
.500	.2248	.1969	.1755	.1778	.3324
.950	.2419	.1798	.1829	.1890	.3384

MACH (1) = .230 ALPHA (4) = 15.810

X/L	.050	.250	.500	.750	.950
X/LW					
.050	.4204	.3280	.3322	.3272	.6062
.500	.3404	.3132	.3196	.2863	.4379
.950	.3868	.3162	.3361	.2995	.5178

MACH (1) = .230 ALPHA (5) = 18.980

X/L	.050	.250	.500	.750	.950
X/LW					
.050	.4617	.3874	.4008	.4271	.7017
.500	.3794	.3817	.3851	.3502	.5271
.950	.4220	.3911	.3794	.4098	.6548

NAAL 737 OA143 ORB/B66-MAIN GEAR TOP WALL CPS (RFCH23) (14 MAY 75)

REFERENCE DATA

SREF =	2690.0000 SQ.FT.	XMRP =	1076.7000 IN.XO		
LREF =	474.8000 IN.	YMRP =	.0000 IN.YO		
BREF =	936.6800 IN.	ZMRP =	375.0000 IN.ZO		
SCALE =	.0405				

PARAMETRIC DATA

BETA =	-8.000	BDFLAP =	-11.700
ELEVON =	10.000	RUDDER =	.000
SPDBRK =	25.000	GRDPLN =	.000
LNGRPS =	1.000	LNDGDR =	100.000

SECTION (1)MN GR TOP WAL CPS DEPENDENT VARIABLE CP

MACH (1) = .230 ALPHA (1) = .100

X/L	.050	.250	.500	.750	.950
X/LW					
.050	-.1467	-.1871	-.2086	-.2479	.0942
.500	-.1936	-.1994	-.2276	-.2413	-.0230
.950	-.1100	-.2136	-.1725	-.1820	.1294

MACH (1) = .230 ALPHA (2) = 5.320

X/L	.050	.250	.500	.750	.950
X/LW					
.050	.0119	-.0012	-.0344	-.0586	.1780
.500	-.0287	-.0162	-.0189	-.0580	.1094
.950	.0384	-.0162	.0102	.0082	.2349

MACH (1) = .230 ALPHA (3) = 10.590

X/L	.050	.250	.500	.750	.950
X/LW					
.050	.1821	.1672	.1354	.1324	.3420
.500	.1648	.1523	.1340	.1272	.2602
.950	.1925	.1510	.1506	.1496	.2753

MACH (1) = .230 ALPHA (4) = 15.850

X/L	.050	.250	.500	.750	.950
X/LW					
.050	.3735	.3048	.2798	.2960	.4650
.500	.3290	.3001	.2802	.2768	.4460
.950	.3493	.2863	.2870	.2886	.4383

MACH (1) = .230 ALPHA (5) = 19.010

X/L	.050	.250	.500	.750	.950
X/LW					
.050	.4581	.3791	.3682	.3657	.6049
.500	.4047	.3690	.3606	.3388	.5209
.950	.4272	.3616	.3727	.3476	.5357

NAAL 737 OA143 ORB/B66-MAIN GEAR TOP WALL CPS (RFCH24) (14 MAY 75)

REFERENCE DATA

SREF = 2690.0000 SQ.FT. XMRP = 1076.7000 IN.XO
LREF = 474.8000 IN. YMRP = .0000 IN.YO
BREF = 936.6800 IN. ZMRP = 375.0000 IN.ZO
SCALE = .0405

PARAMETRIC DATA

BETA = 4.000 BDFLAP = -11.700
ELEVON = 10.000 RUDDER = .000
SPDBRK = 25.000 GRDPLN = .000
LNGRPS = 1.000 LNDGDR = 100.000

SECTION (1)MN GR TOP WAL CPS DEPENDENT VARIABLE CP

MACH (1) = .230 ALPHA (1) = .070

X/L	.050	.250	.500	.750	.950
X/LW					
.050	.0398	.0297	-.0056	.0036	.1383
.500	.0280	.0202	-.0046	-.0021	.1111
.950	.0391	.0159	.0047	.0068	.1002

MACH (1) = .230 ALPHA (2) = 5.290

X/L	.050	.250	.500	.750	.950
X/LW					
.050	.2005	.1323	.1157	.1201	.3265
.500	.1529	.1259	.1076	.0922	.2642
.950	.1753	.1147	.1184	.1028	.2929

MACH (1) = .230 ALPHA (3) = 10.530

X/L	.050	.250	.500	.750	.950
X/LW					
.050	.2729	.2309	.2388	.2846	.5010
.500	.2258	.2305	.2252	.2072	.3645
.950	.2446	.2406	.2389	.2681	.4661

MACH (1) = .230 ALPHA (4) = 15.790

X/L	.050	.250	.500	.750	.950
X/LW					
.050	.3776	.3507	.3689	.4412	.6761
.500	.3308	.3358	.3601	.3607	.5243
.950	.3581	.3735	.3799	.4368	.6258

MACH (1) = .230 ALPHA (5) = 18.950

X/L	.050	.250	.500	.750	.950
X/LW					
.050	.4305	.4188	.4495	.5105	.7174
.500	.4067	.3910	.4372	.4392	.5810
.950	.4221	.4596	.4432	.4804	.6685

NAAL 737 OA143 ORB/866-MAINGEAR TOP WALL CPS (RFCH25) (14 MAY 75)

REFERENCE DATA

SREF =	2690.0000 SQ.FT.	XMRP =	1076.7000 IN.XO		
LREF =	474.8000 IN.	YMRP =	.0000 IN.YO		
BREF =	936.6800 IN.	ZMRP =	375.0000 IN.ZO		
SCALE =	.0405				

PARAMETRIC DATA

BETA =	8.000	BDFLAP =	-11.700
ELEVON =	10.000	RUDDER =	.000
SPDBRK =	25.000	GRDPLN =	.000
LNGRPS =	1.000	LNDGDR =	100.000

SECTION (1)MN GR TOP WAL CPS DEPENDENT VARIABLE CP IM

MACH (1) = .230 ALPHA (1) = .100

X/L	.050	.250	.500	.750	.950
X/LW					
.050	.0944	.0373	.0162	.0235	.1671
.500	.0555	.0352	.0098	.0090	.1545
.950	.0708	.0268	.0156	.0197	.1723

MACH (1) = .230 ALPHA (2) = 5.310

X/L	.050	.250	.500	.750	.950
X/LW					
.050	.2067	.1624	.1691	.2125	.4002
.500	.1617	.1566	.1597	.1425	.2775
.950	.1736	.1682	.1665	.1970	.3731

MACH (1) = .230 ALPHA (3) = 10.550

X/L	.050	.250	.500	.750	.950
X/LW					
.050	.3178	.2857	.3109	.3862	.6501
.500	.2597	.2671	.2985	.3015	.4881
.950	.2921	.3080	.3185	.3854	.5905

MACH (1) = .230 ALPHA (4) = 15.830

X/L	.050	.250	.500	.750	.950
X/LW					
.050	.3927	.3920	.4259	.4964	.7413
.500	.3711	.3509	.4041	.3987	.5789
.950	.3984	.4472	.4159	.4562	.6747

MACH (1) = .230 ALPHA (5) = 18.970

X/L	.050	.250	.500	.750	.950
X/LW					
.050	.4517	.4615	.5095	.5403	.7596
.500	.4231	.3969	.4494	.4713	.6200
.950	.4732	.5422	.4739	.5114	.6975

NAAL 737 OA143 ORB/B66-MAIN GEAR TOP WALL CPS (RFCH26) (14 MAY 75)

REFERENCE DATA

SREF =	2690.0000 SQ.FT.	XMRP =	1076.7000 IN.XO		
LREF =	474.8000 IN.	YMRP =	.0000 IN.YO		
BREF =	936.6800 IN.	ZMRP =	375.0000 IN.ZO		
SCALE =	.0405				

PARAMETRIC DATA

BETA =	8.000	BDFLAP =	-11.700
ELEVON =	10.000	RUDDER =	.000
SPDBRK =	25.000	GRDPLN =	.000
LNGRPS =	.000	LNDGDR =	.000

SECTION (1)MN GR TOP-WAL CPS DEPENDENT VARIABLE CP

MACH (1) = .230 ALPHA (1) = .070

X/L	.050	.250	.500	.750	.950
X/LW					
.050	-.0885	-.0868	-.0871	-.0841	-.0860
.500	-.0891	-.0881	-.0895	-.0855	-.0858
.950	-.0908	-.0898	-.0898	-.0860	-.0847

MACH (1) = .230 ALPHA (2) = 5.330

X/L	.050	.250	.500	.750	.950
X/LW					
.050	-.0209	-.0185	-.0180	-.0161	-.0158
.500	-.0185	-.0216	-.0199	-.0177	-.0155
.950	-.0178	-.0202	-.0189	-.0196	-.0183

MACH (1) = .230 ALPHA (3) = 10.570

X/L	.050	.250	.500	.750	.950
X/LW					
.050	.0546	.0559	.0564	.0573	.0575
.500	.0549	.0556	.0536	.0567	.0551
.950	.0559	.0549	.0539	.0559	.0570

MACH (1) = .230 ALPHA (4) = 15.850

X/L	.050	.250	.500	.750	.950
X/LW					
.050	.1362	.1339	.1335	.1360	.1357
.500	.1342	.1352	.1339	.1349	.1357
.950	.1362	.1355	.1372	.1341	.1341

MACH (1) = .230 ALPHA (5) = 19.010

X/L	.050	.250	.500	.750	.950
X/LW					
.050	.1837	.1814	.1834	.1815	.1809
.500	.1827	.1834	.1814	.1826	.1801
.950	.1824	.1840	.1810	.1823	.1817

NAAL 737 OA143 ORB/B66-MAIN GEAR TOP WALL CPS (RFCH27) (14 MAY 75)

REFERENCE DATA

SREF = 2690.0000 SQ.FT. XMRP = 1076.7000 IN.XO
LREF = 474.8000 IN. YMRP = .0000 IN.YO
BREF = 936.6800 IN. ZMRP = 375.0000 IN.ZO
SCALE = .0405

PARAMETRIC DATA

BETA = 8.000 BDFLAP = -11.700
ELEVON = 10.000 RUDDER = .000
SPDBRK = 25.000 GRDPLN = .000
LNGRPS = .000 LNDGDR = 40.000

SECTION (1)MN GR TOP WAL CPS DEPENDENT VARIABLE CP

MACH (1) = .230 ALPHA (1) = .080

X/L	.050	.250	.500	.750	.950
X/LW					
.050	-.0391	-.0655	-.0935	-.0888	.1426
.500	-.0584	-.0699	-.0848	-.0861	.0025
.950	-.0327	-.0811	-.0567	-.0650	.0370

MACH (1) = .230 ALPHA (2) = 5.320

X/L	.050	.250	.500	.750	.950
X/LW					
.050	.1039	.0557	.0579	.0571	.1817
.500	.0737	.0550	.0360	.0357	.1460
.950	.0869	.0537	.0243	.0763	.2444

MACH (1) = .230 ALPHA (3) = 10.550

X/L	.050	.250	.500	.750	.950
X/LW					
.050	.2367	.1654	.1839	.2608	.4953
.500	.1735	.1685	.1542	.1630	.3235
.950	.2022	.1627	.1776	.2815	.4906

MACH (1) = .230 ALPHA (4) = 15.820

X/L	.050	.250	.500	.750	.950
X/LW					
.050	.3187	.2690	.2845	.3711	.6296
.500	.2781	.2727	.2626	.2727	.4345
.950	.2976	.2700	.3060	.4348	.5823

MACH (1) = .230 ALPHA (5) = 18.970

X/L	.050	.250	.500	.750	.950
X/LW					
.050	.3660	.3304	.3442	.4311	.6591
.500	.3304	.3294	.3234	.3414	.4955
.950	.3499	.3287	.3767	.5196	.6251

NAAL 737 OA143 ORB/866-MAIN GEAR TOP WALL CPS (RFCH29) (14 MAY 75)

REFERENCE DATA

SREF =	2690.0000 SQ.FT.	XMRP =	1076.7000 IN.XO		
LREF =	474.8000 IN.	YMRP =	.0000 IN.YO		
BREF =	936.6800 IN.	ZMRP =	375.0000 IN.ZO		
SCALE =	.0405				

PARAMETRIC DATA

BETA =	8.000	BDFLAP =	-11.700
ELEVON =	10.000	RUDDER =	.000
SPDBRK =	25.000	GRDPLN =	.000
LNGRPS =	.000	LNDGDR =	80.000

SECTION (1)MN GR TOP WAL CPS DEPENDENT VARIABLE CP

MACH (1) = .230 ALPHA (1) = .090

X/L	.050	.250	.500	.750	.950
X/LW					
.050	.0038	-.0337	-.0579	-.0612	.1524
.500	.0004	-.0486	-.0787	-.0830	.0498
.950	.0065	-.0466	-.1031	-.0475	.2068

MACH (1) = .230 ALPHA (2) = 5.330

X/L	.050	.250	.500	.750	.950
X/LW					
.050	.1387	.0879	.0989	.1383	.2949
.500	.0954	.0913	.0754	.0694	.1997
.950	.1099	.0896	.0717	.1257	.3693

MACH (1) = .230 ALPHA (3) = 10.560

X/L	.050	.250	.500	.750	.950
X/LW					
.050	.2594	.2094	.2221	.3416	.6331
.500	.2121	.2091	.1963	.2439	.4054
.950	.2375	.2078	.2182	.4382	.5826

MACH (1) = .230 ALPHA (4) = 15.810

X/L	.050	.250	.500	.750	.950
X/LW					
.050	.3407	.3060	.3363	.4857	.7309
.500	.3020	.3030	.3165	.3754	.5350
.950	.3249	.2983	.3101	.6040	.6610

MACH (1) = .230 ALPHA (5) = 18.970

X/L	.050	.250	.500	.750	.950
X/LW					
.050	.3879	.3647	.4144	.5533	.7689
.500	.3590	.3583	.3875	.4369	.5926
.950	.3845	.3583	.4437	.6583	.7033

NAAL 737 OA143 ORB/B66-MAIN GEAR TOP WALL CPS (RFCH30) (14 MAY 75)

REFERENCE DATA

SREF = 2690.0000 SQ.FT. XMRP = 1076.7000 IN.XO
LREF = 474.8000 IN. YMRP = .0000 IN.YO
BREF = 936.6800 IN. ZMRP = 375.0000 IN.ZO
SCALE = .0405

PARAMETRIC DATA

BETA = .000 BDFLAP = -11.700
ELEVON = 5.000 RUDDER = .000
SPDBRK = 25.000 GRDPLN = .000
LNGRPS = 1.000 LNDGDR = 100.000

SECTION (1)MN GR TOP WAL CPS DEPENDENT VARIABLE CP

MACH (1) = .230 ALPHA (1) = .010

X/L	.050	.250	.500	.750	.950
X/LW					
.050	-.0344	-.0524	-.0760	-.0919	.1810
.500	-.0978	-.0713	-.0720	-.0952	.0383
.950	-.0094	-.0676	-.0320	-.0475	.1632

MACH (1) = .230 ALPHA (2) = 5.240

X/L	.050	.250	.500	.750	.950
X/LW					
.050	.1258	.0914	.0671	.0823	.1992
.500	.1120	.0901	.0641	.0723	.1995
.950	.1150	.0924	.0742	.0796	.2014

MACH (1) = .230 ALPHA (3) = 10.470

X/L	.050	.250	.500	.750	.950
X/LW					
.050	.3105	.2200	.2121	.2099	.4867
.500	.2455	.2072	.2021	.1744	.3623
.950	.2772	.2031	.2152	.1879	.3904

MACH (1) = .230 ALPHA (4) = 15.730

X/L	.050	.250	.500	.750	.950
X/LW					
.050	.3941	.3190	.3283	.3623	.6686
.500	.3133	.3156	.3156	.2794	.4787
.950	.3539	.3255	.3129	.3452	.6167

MACH (1) = .230 ALPHA (5) = 18.890

X/L	.050	.250	.500	.750	.950
X/LW					
.050	.4311	.3808	.3912	.4527	.7311
.500	.3781	.3734	.3818	.3732	.5687
.950	.4018	.3970	.3960	.4455	.6681

NAAL 737 OA143 OR8/866-MAIN GEAR TOP WALL CPS (RFCH31) (14 MAY 75)

REFERENCE DATA

SREF =	2690.0000 SQ.FT.	XMRP =	1076.7000 IN.XO		
LREF =	474.8000 IN.	YMRP =	.0000 IN.YO		
BREF =	936.6800 IN.	ZMRP =	375.0000 IN.ZO		
SCALE =	.0405				

PARAMETRIC DATA

BETA =	-4.000	BDFLAP =	-11.700
ELEVON =	5.000	RUDDER =	.000
SPDBRK =	25.000	GRDPLN =	.000
LNGRPS =	1.000	LNDGDR =	100.000

SECTION (1)MN GR TOP WAL CPS DEPENDENT VARIABLE CP

MACH (1) = .230 ALPHA (1) = .000

X/L	.050	.250	.500	.750	.950
X/LW					
.050	-.0934	-.1300	-.1267	-.1529	.1260
.500	-.1953	-.1642	-.1239	-.1680	.0063
.950	-.0720	-.1428	-.0764	-.0870	.1769

MACH (1) = .230 ALPHA (2) = 5.250

X/L	.050	.250	.500	.750	.950
X/LW					
.050	.0589	.0423	.0038	.0003	.2564
.500	.0319	.0234	.0038	-.0026	.1428
.950	.0782	.0254	.0335	.0271	.2140

MACH (1) = .230 ALPHA (3) = 10.480

X/L	.050	.250	.500	.750	.950
X/LW					
.050	.2438	.1891	.1578	.1748	.3254
.500	.2036	.1817	.1586	.1589	.3124
.950	.2228	.1647	.1647	.1729	.3221

MACH (1) = .230 ALPHA (4) = 15.760

X/L	.050	.250	.500	.750	.950
X/LW					
.050	.4093	.3156	.3156	.3060	.5876
.500	.3311	.3045	.3072	.2677	.4365
.950	.3742	.3015	.3190	.2812	.4926

MACH (1) = .230 ALPHA (5) = 18.910

X/L	.050	.250	.500	.750	.950
X/LW					
.050	.4527	.3747	.3921	.4147	.6832
.500	.3660	.3693	.3751	.3372	.5103
.950	.4121	.3784	.3767	.3787	.6426

NAAL 737 OA143 ORB/B66-MAIN GEAR TOP WALL CPS (RFCH32) (14 MAY 75)

REFERENCE DATA

SREF =	2690.0000 SQ.FT.	XMRP =	1076.7000 IN.XO		
LREF =	474.8000 IN.	YMRP =	.0000 IN.YO		
BREF =	936.6800 IN.	ZMRP =	375.0000 IN.ZO		
SCALE =	.0405				

PARAMETRIC DATA

BETA =	-8.000	BDFLAP =	-11.700
ELEVON =	5.000	RUDDER =	.000
SPDBRK =	25.000	GRDPLN =	.000
LNGRPS =	1.000	LNDGDR =	100.000

SECTION (1)MN GR TOP WAL CPS DEPENDENT VARIABLE CP

MACH (1) = .230 ALPHA (1) = .050

X/L	.050	.250	.500	.750	.950
X/LW					
.050	-.1672	-.2054	-.2364	-.2681	.0912
.500	-.2180	-.2207	-.2471	-.2624	-.0450
.950	-.1326	-.2312	-.1932	-.1983	.1166

MACH (1) = .230 ALPHA (2) = 5.250

X/L	.050	.250	.500	.750	.950
X/LW					
.050	-.0077	-.0192	-.0372	-.0824	.1762
.500	-.0890	-.0365	-.0578	-.0788	.0830
.950	.0173	-.0334	-.0056	-.0204	.2182

MACH (1) = .230 ALPHA (3) = 10.520

X/L	.050	.250	.500	.750	.950
X/LW					
.050	.1608	.1439	.1136	.1078	.3231
.500	.1446	.1297	.1128	.1075	.2434
.950	.1726	.1277	.1297	.1294	.2714

MACH (1) = .230 ALPHA (4) = 15.790

X/L	.050	.250	.500	.750	.950
X/LW					
.050	.3547	.2881	.2632	.2809	.4483
.500	.3097	.2874	.2634	.2638	.4265
.950	.3324	.2736	.2682	.2751	.4284

MACH (1) = .230 ALPHA (5) = 18.960

X/L	.050	.250	.500	.750	.950
X/LW					
.050	.4463	.3631	.3506	.3509	.5807
.500	.3876	.3577	.3423	.3240	.5033
.950	.4134	.3448	.3530	.3328	.5171

NAAL 737 OA143 ORB/B66-MAIN GEAR TOP WALL CPS (RFCH33) (14 MAY 75)

REFERENCE DATA

SREF =	2690.0000 SQ.FT.	XMRP =	1076.7000 IN.XO		
LREF =	474.8000 IN.	YMRP =	.0000 IN.YO		
BREF =	936.6800 IN.	ZMRP =	375.0000 IN.ZO		
SCALE =	.0405				

PARAMETRIC DATA

BETA =	4.000	BDFLAP =	-11.700
ELEVON =	5.000	RUDDER =	.000
SPDBRK =	25.000	GRDPLN =	.000
LNGRPS =	1.000	LNDGDR =	100.000

SECTION (1)MN GR TOP WAL CPS DEPENDENT VARIABLE CP

MACH (1) = .230 ALPHA (1) = .010

X/L	.050	.250	.500	.750	.950
X/LW					
.050	.0211	.0140	-.0241	-.0150	.1323
.500	.0119	.0024	-.0244	-.0213	.0985
.950	.0225	-.0022	-.0138	-.0109	.0875

MACH (1) = .230 ALPHA (2) = 5.230

X/L	.050	.250	.500	.750	.950
X/LW					
.050	.1870	.1169	.0994	.1005	.3040
.500	.1382	.1122	.0918	.0767	.2549
.950	.1630	.0976	.0973	.0874	.2762

MACH (1) = .230 ALPHA (3) = 10.470

X/L	.050	.250	.500	.750	.950
X/LW					
.050	.2600	.2186	.2198	.2660	.4746
.500	.2125	.2159	.2119	.1870	.3444
.950	.2284	.2267	.2226	.2462	.4532

MACH (1) = .230 ALPHA (4) = 15.750

X/L	.050	.250	.500	.750	.950
X/LW					
.050	.3683	.3374	.3540	.4258	.6632
.500	.3262	.3249	.3471	.3474	.5188
.950	.3444	.3542	.3633	.4285	.6219

MACH (1) = .230 ALPHA (5) = 18.910

X/L	.050	.250	.500	.750	.950
X/LW					
.050	.4207	.4079	.4338	.5047	.7119
.500	.3965	.3830	.4203	.4291	.5775
.950	.4160	.4398	.4328	.4830	.6731

NAAL 737 OA143 ORB/B66-MAIN GEAR TOP WALL CPS (RFCH34) (14 MAY 75)

REFERENCE DATA

SREF = 2690.0000 SQ.FT. XMRP = 1076.7000 IN.XO
LREF = 474.8000 IN. YMRP = .0000 IN.YO
BREF = 936.6800 IN. ZMRP = 375.0000 IN.ZO
SCALE = .0405

PARAMETRIC DATA

BETA = 8.000 BDFLAP = -11.700
ELEVON = 5.000 RUDDER = .000
SPDBRK = 25.000 GRDPLN = .000
LNGRPS = 1.000 LNDGDR = 100.000

SECTION (1)MN GR TOP WAL CPS DEPENDENT VARIABLE CP

MACH (1) = .230 ALPHA (1) = -4.170

X/L	.050	.250	.500	.750	.950
X/LW					
.050	-.0273	-.0344	-.0775	-.0633	.0864
.500	-.0327	-.0486	-.0763	-.0710	.0599
.950	-.0276	-.0472	-.0655	-.0633	.0498

MACH (1) = .230 ALPHA (2) = -2.060

X/L	.050	.250	.500	.750	.950
X/LW					
.050	.0272	-.0134	-.0407	-.0262	.1059
.500	.0082	-.0168	-.0429	-.0369	.1020
.950	.0129	-.0168	-.0318	-.0251	.1168

MACH (1) = .230 ALPHA (3) = .020

X/L	.050	.250	.500	.750	.950
X/LW					
.050	.0752	.0227	.0036	.0104	.1603
.500	.0420	.0203	-.0049	-.0040	.1420
.950	.0606	.0115	.0034	.0060	.1669

MACH (1) = .230 ALPHA (4) = 2.090

X/L	.050	.250	.500	.750	.950
X/LW					
.050	.1258	.0678	.0534	.0537	.2324
.500	.0831	.0627	.0444	.0299	.1847
.950	.1061	.0553	.0502	.0384	.2040

MACH (1) = .230 ALPHA (5) = 4.170

X/L	.050	.250	.500	.750	.950
X/LW					
.050	.1708	.1190	.1309	.1353	.3013
.500	.1180	.1132	.1183	.0896	.2029
.950	.1525	.1213	.1180	.1134	.3096

MACH (1) = .230 ALPHA (6) = 6.270

X/L	.050	.250	.500	.750	.950
X/LW					
.050	.2227	.1828	.1957	.2513	.4554
.500	.1689	.1754	.1879	.1728	.3326
.950	.1943	.1936	.1974	.2416	.4313

MACH (1) = .230 ALPHA (7) = 8.370

X/L	.050	.250	.500	.750	.950
X/LW					
.050	.2728	.2345	.2531	.3263	.5842
.500	.2065	.2220	.2395	.2363	.4342
.950	.2442	.2486	.2574	.3272	.5253

NAAL 737 OA143 ORB/B66-MAIN GEAR TOP WALL CPS (RFCH34)

SECTION (1)MN GR TOP WAL CPS DEPENDENT VARIABLE CP

MACH (1) = .230 ALPHA (8) = 10.470

X/L	.050	.250	.500	.750	.950
X/LW					
.050	.3103	.2796	.2973	.3866	.6661
.500	.2490	.2601	.2847	.2877	.4996
.950	.2857	.3009	.3100	.3852	.6068

MACH (1) = .230 ALPHA (9) = 12.570

X/L	.050	.250	.500	.750	.950
X/LW					
.050	.3386	.3140	.3390	.4314	.7078
.500	.2841	.2911	.3275	.3379	.5403
.950	.3211	.3439	.3490	.4451	.6500

MACH (1) = .230 ALPHA (10) = 14.650

X/L	.050	.250	.500	.750	.950
X/LW					
.050	.3659	.3531	.3824	.4698	.7238
.500	.3326	.3235	.3666	.3775	.5622
.950	.3646	.3962	.3861	.4715	.6740

MACH (1) = .230 ALPHA (11) = 16.770

X/L	.050	.250	.500	.750	.950
X/LW					
.050	.3989	.3999	.4311	.5027	.7419
.500	.3759	.3574	.4053	.4101	.5857
.950	.4167	.4589	.4241	.4650	.6942

MACH (1) = .230 ALPHA (12) = 18.880

X/L	.050	.250	.500	.750	.950
X/LW					
.050	.4385	.4476	.4916	.5352	.7520
.500	.4086	.3855	.4341	.4620	.6115
.950	.4523	.5067	.4563	.4938	.7045

NAAL 737 OA143 ORB/B65-MAIN GEAR TOP WALL CPS (RFCH35) (14 MAY 75)

REFERENCE DATA

SREF =	2690.0000 SQ.FT.	XMRP =	1076.7000 IN.XO		
LREF =	474.8000 IN.	YMRP =	.0000 IN.YO		
BREF =	936.6800 IN.	ZMRP =	375.0000 IN.ZO		
SCALE =	.0405				

PARAMETRIC DATA

BETA =	.000	BDFLAP =	-11.700
ELEVON =	5.000	RUDDER =	.000
SPDBRK =	25.000	GRDPLN =	.000
LNGRPS =	1.000	LNDGDR =	100.000

SECTION (1)MN GR TOP WAL CPS DEPENDENT VARIABLE CP

MACH (1) = .230 ALPHA (1) = .030

X/L	.050	.250	.500	.750	.950
X/LW					
.050	-.0310	-.0517	-.0766	-.0788	.1778
.500	-.0954	-.0687	-.0727	-.0957	.0381
.950	-.0080	-.0602	-.0334	-.0440	.1704

MACH (1) = .230 ALPHA (2) = 5.230

X/L	.050	.250	.500	.750	.950
X/LW					
.050	.1243	.0922	.0633	.0786	.1986
.500	.1108	.0865	.0639	.0669	.2005
.950	.1159	.0919	.0713	.0764	.2003

MACH (1) = .230 ALPHA (3) = 10.470

X/L	.050	.250	.500	.750	.950
X/LW					
.050	.3115	.2205	.2087	.2098	.4833
.500	.2451	.2080	.2036	.1723	.3591
.950	.2751	.2030	.2181	.1875	.3894

MACH (1) = .230 ALPHA (4) = 15.750

X/L	.050	.250	.500	.750	.950
X/LW					
.050	.3924	.3172	.3296	.3646	.6655
.500	.3166	.3125	.3155	.2737	.4792
.950	.3462	.3257	.3149	.3418	.6128

MACH (1) = .230 ALPHA (5) = 18.910

X/L	.050	.250	.500	.750	.950
X/LW					
.050	.4321	.3838	.3914	.4584	.7260
.500	.3652	.3767	.3787	.3698	.5669
.950	.3936	.3956	.3936	.4477	.6705

NAAL 737 OA143 ORB/B65-MAIN GEAR TOP WALL CPS (RFCH36) (14 MAY 75)

REFERENCE DATA

SREF = 2690.0000 SQ.FT. XMRP = 1076.7000 IN.XO
LREF = 474.8000 IN. YMRP = .0000 IN.YO
BREF = 936.6800 IN. ZMRP = 375.0000 IN.ZO
SCALE = .0405

PARAMETRIC DATA

BETA = -4.000 BDFLAP = -11.700
ELEVON = 5.000 RUDDER = .000
SPDBRK = 25.000 GRDPLN = .000
LNGRPS = 1.000 LNDGDR = 100.000

SECTION (1)MN GR TOP WAL CPS DEPENDENT VARIABLE CP

MACH (1) = .230 ALPHA (1) = .000

X/L	.050	.250	.500	.750	.950
X/LW					
.050	-.0921	-.1321	-.1243	-.1507	.1237
.500	-.1874	-.1566	-.1264	-.1668	.0066
.950	-.0745	-.1437	-.0881	-.0813	.1810

MACH (1) = .230 ALPHA (2) = 5.260

X/L	.050	.250	.500	.750	.950
X/LW					
.050	.0584	.0435	.0044	.0022	.2537
.500	.0350	.0272	.0072	-.0032	.1424
.950	.0818	.0194	.0313	.0272	.2068

MACH (1) = .230 ALPHA (3) = 10.490

X/L	.050	.250	.500	.750	.950
X/LW					
.050	.2407	.1869	.1571	.1751	.3231
.500	.2060	.1818	.1589	.1593	.3115
.950	.2215	.1717	.1643	.1707	.3228

MACH (1) = .230 ALPHA (4) = 15.770

X/L	.050	.250	.500	.750	.950
X/LW					
.050	.4035	.3152	.3157	.3011	.5807
.500	.3337	.2985	.3005	.2657	.4336
.950	.3706	.3018	.3139	.2786	.4855

MACH (1) = .230 ALPHA (5) = 18.920

X/L	.050	.250	.500	.750	.950
X/LW					
.050	.4536	.3724	.3884	.4081	.6768
.500	.3597	.3620	.3768	.3355	.5027
.950	.4133	.3784	.3771	.3785	.6395

NAAL 737 OA143 ORB/B65-MAIN GEAR TOP WALL CPS (RFCH37) (14 MAY 75)

REFERENCE DATA

SREF = 2690.0000 SQ.FT. XMRP = 1076.7000 IN.XO
LREF = 474.8000 IN. YMRP = .0000 IN.YO
BREF = 936.6800 IN. ZMRP = 375.0000 IN.ZO
SCALE = .0405

PARAMETRIC DATA

BETA = -8.000 BDFLAP = -11.700
ELEVON = 5.000 RUDDER = .000
SPDBRK = 25.000 GRDPLN = .000
LNGRPS = 1.000 LNDGDR = 100.000

SECTION (1)MN GR TOP WAL CPS DEPENDENT VARIABLE CP

MACH (1) = .230 ALPHA (1) = .030

X/L	.050	.250	.500	.750	.950
X/LW					
.050	-.1679	-.2018	-.2389	-.2704	.0827
.500	-.2231	-.2238	-.2445	-.2628	-.0464
.950	-.1330	-.2330	-.1896	-.1888	.1126

MACH (1) = .230 ALPHA (2) = 5.250

X/L	.050	.250	.500	.750	.950
X/LW					
.050	-.0012	-.0256	-.0429	-.0769	.1687
.500	-.0937	-.0344	-.0456	-.0777	.0844
.950	.0231	-.0331	-.0111	.0077	.2341

MACH (1) = .230 ALPHA (3) = 10.510

X/L	.050	.250	.500	.750	.950
X/LW					
.050	.1620	.1481	.1098	.1131	.3287
.500	.1461	.1329	.1122	.1088	.2476
.950	.1759	.1264	.1322	.1287	.2683

MACH (1) = .230 ALPHA (4) = 15.790

X/L	.050	.250	.500	.750	.950
X/LW					
.050	.3539	.2866	.2608	.2811	.4435
.500	.3095	.2863	.2623	.2619	.4267
.950	.3304	.2738	.2687	.2720	.4223

MACH (1) = .230 ALPHA (5) = 18.950

X/L	.050	.250	.500	.750	.950
X/LW					
.050	.4456	.3635	.3508	.3527	.5815
.500	.3924	.3564	.3443	.3250	.5098
.950	.4136	.3456	.3534	.3357	.5125

NAAL 737 OA143 ORB/B65-MAIN GEAR TOP WALL CPS (RFCH38) (14 MAY 75)

REFERENCE DATA

SREF =	2690.0000 SQ.FT.	XMRP =	1076.7000 IN.XO		
LREF =	474.8000 IN.	YMRP =	.0000 IN.YO		
BREF =	936.6800 IN.	ZMRP =	375.0000 IN.ZO		
SCALE =	.0405				

PARAMETRIC DATA

BETA =	4.000	BDFLAP =	-11.700
ELEVON =	5.000	RUDDER =	.000
SPDBRK =	25.000	GRDPLN =	.000
LNGRPS =	1.000	LNDGDR =	100.000

SECTION (1)MN GR TOP WAL CPS DEPENDENT VARIABLE CP

MACH (1) = .230 ALPHA (1) = .010

X/L	.050	.250	.500	.750	.950
X/LW					
.050	.0237	.0136	-.0232	-.0138	.1314
.500	.0129	.0034	-.0222	-.0190	.0983
.950	.0241	-.0019	-.0131	-.0095	.0871

MACH (1) = .230 ALPHA (2) = 5.240

X/L	.050	.250	.500	.750	.950
X/LW					
.050	.1869	.1169	.0972	.1033	.3039
.500	.1377	.1122	.0918	.0775	.2527
.950	.1625	.0989	.0979	.0860	.2781

MACH (1) = .230 ALPHA (3) = 10.090

X/L	.050	.250	.500	.750	.950
X/LW					
.050	.4213	.4105	.4357	.5033	.7196
.500	.3946	.3862	.4230	.4305	.5784
.950	.4142	.4496	.4378	.4796	.6744

MACH (1) = .230 ALPHA (4) = 10.460

X/L	.050	.250	.500	.750	.950
X/LW					
.050	.2605	.2183	.2232	.2637	.4821
.500	.2149	.2129	.2122	.1901	.3420
.950	.2318	.2247	.2207	.2450	.4686

MACH (1) = .230 ALPHA (5) = 15.730

X/L	.050	.250	.500	.750	.950
X/LW					
.050	.3647	.3374	.3532	.4259	.6650
.500	.3202	.3252	.3458	.3428	.5135
.950	.3411	.3572	.3596	.4177	.6223

NAAL 737 OA143 ORB/B65-MAIN GEAR TOP WALL CPS (RFCH39) (14 MAY 75)

REFERENCE DATA

SREF =	2690.0000 SQ.FT.	XMRP =	1076.7000 IN.XO		
LREF =	474.8000 IN.	YMRP =	[illegible]00 IN.YO		
BREF =	936.6800 IN.	ZMRP =	375.[illegible]00 IN.ZO		
SCALE =	.0405				

PARAMETRIC DATA

BETA =	8.000	BDFLAP =	-11.700
ELEVON =	5.000	RUDDER =	.000
SPDBRK =	25.000	GRDPLN =	.000
LNGRPS =	1.000	LNDGDR =	100.000

SECTION (1)MN GR TOP WAL CPS DEPENDENT VARIABLE CP

MACH (1) = .230 ALPHA (1) = .020

X/L	.050	.250	.500	.750	.950
X/LW					
.050	.0750	.0224	.0019	.0129	.1612
.500	.0441	.0197	-.0036	-.0043	.1431
.950	.0584	.0146	.0041	.0074	.1618

MACH (1) = .230 ALPHA (2) = 5.250

X/L	.050	.250	.500	.750	.950
X/LW					
.050	.1931	.1479	.1553	.1984	.3689
.500	.1425	.1462	.1496	.1343	.2634
.950	.1648	.1529	.1479	.1797	.3614

MACH (1) = .230 ALPHA (3) = 10.460

X/L	.050	.250	.500	.750	.950
X/LW					
.050	.3053	.2740	.2942	.3874	.6619
.500	.2467	.2558	.2844	.2843	.4966
.950	.2831	.2989	.3060	.3905	.6069

MACH (1) = .230 ALPHA (4) = 15.740

X/L	.050	.250	.500	.750	.950
X/LW					
.050	.3794	.3757	.4043	.4816	.7334
.500	.3596	.3387	.3855	.3906	.5738
.950	.3879	.4279	.4013	.4607	.6844

MACH (1) = .230 ALPHA (5) = 18.890

X/L	.050	.250	.500	.750	.950
X/LW					
.050	.4400	.4498	.4907	.5366	.7531
.500	.4110	.3855	.4407	.4577	.6139
.950	.4636	.5063	.4575	.4918	.7072

NAAL 737 OA143 ORB/B67-MAIN GEAR TOP WALL CPS (RFCH56) (14 MAY 75)

REFERENCE DATA

SREF = 2690.0000 SQ.FT. XMRP = 1076.7000 IN.XO
LREF = 474.8000 IN. YMRP = .0000 IN.YO
BREF = 936.6800 IN. ZMRP = 375.0000 IN.ZO
SCALE = .0405

PARAMETRIC DATA

BETA = .000 BDFLAP = -11.700
ELEVON = 5.000 RUDDER = .000
SPDBRK = 25.000 GRDPLN = .000
LNGRPS = 1.000 LNDGDR = 100.000

SECTION (1)MN GR TOP WAL CPS DEPENDENT VARIABLE CP

MACH (1) = .230 ALPHA (1) = -4.160

X/L	.050	.250	.500	.750	.950
X/LW					
.050	-.1480	-.1845	-.1915	-.1869	.0850
.500	-.2309	-.2025	-.1805	-.2189	-.0455
.950	-.1345	-.1967	-.1362	-.1360	.1258

MACH (1) = .230 ALPHA (2) = -2.080

X/L	.050	.250	.500	.750	.950
X/LW					
.050	-.0922	-.1180	-.1319	-.1349	.1252
.500	-.1788	-.1425	-.1228	-.1618	-.0024
.950	-.0708	-.1323	-.0803	-.0896	.1512

MACH (1) = .230 ALPHA (3) = .020

X/L	.050	.250	.500	.750	.950
X/LW					
.050	-.0362	-.0511	-.0784	-.0803	.1770
.500	-.0892	-.0718	-.0668	-.0981	.0384
.950	-.0104	-.0654	-.0328	-.0465	.1718

MACH (1) = .230 ALPHA (4) = 2.110

X/L	.050	.250	.500	.750	.950
X/LW					
.050	.0251	.0082	-.0281	-.0251	.2077
.500	-.0002	-.0036	-.0266	-.0311	.0920
.950	.0424	-.0124	.0031	-.0062	.1511

MACH (1) = .230 ALPHA (5) = 4.200

X/L	.050	.250	.500	.750	.950
X/LW					
.050	.0839	.0768	.0369	.0424	.1948
.500	.0707	.0599	.0328	.0388	.1665
.950	.0849	.0579	.0460	.0487	.1553

MACH (1) = .230 ALPHA (6) = 6.290

X/L	.050	.250	.500	.750	.950
X/LW					
.050	.1622	.1124	.0903	.1045	.2391
.500	.1327	.1111	.0901	.0889	.2418
.950	.1510	.1087	.0942	.0985	.2377

MACH (1) = .230 ALPHA (7) = 8.400

X/L	.050	.250	.500	.750	.950
X/LW					
.050	.2462	.1692	.1523	.1602	.3677
.500	.1924	.1601	.1442	.1297	.3297
.950	.2150	.1462	.1500	.1411	.3127

NAAL 737 OA143 ORB/B67-MAIN GEAR TOP WALL CPS (RFCH56)

SECTION (1)MN GR TOP WAL CPS DEPENDENT VARIABLE CP

MACH (1) = .230 ALPHA (8) = 10.490

X/L	.050	.250	.500	.750	.950
X/LW					
.050	.3092	.2179	.2134	.2052	.4851
.500	.2371	.2017	.1969	.1688	.3498
.950	.2738	.2007	.2165	.1850	.3892

MACH (1) = .230 ALPHA (9) = 12.590

X/L	.050	.250	.500	.750	.950
X/LW					
.050	.3579	.2599	.2775	.2654	.5606
.500	.2437	.2366	.2659	.2095	.3695
.950	.3215	.2575	.2818	.2362	.4943

MACH (1) = .230 ALPHA (10) = 14.700

X/L	.050	.250	.500	.750	.950
X/LW					
.050	.3759	.2932	.3126	.3330	.6363
.500	.2875	.2834	.2939	.2456	.4405
.950	.3354	.3000	.2925	.3026	.5894

MACH (1) = .230 ALPHA (11) = 16.800

X/L	.050	.250	.500	.750	.950
X/LW					
.050	.3970	.3336	.3425	.4026	.6947
.500	.3302	.3299	.3275	.3039	.5128
.950	.3545	.3471	.3437	.3761	.6324

MACH (1) = .230 ALPHA (12) = 18.910

X/L	.050	.250	.500	.750	.950
X/LW					
.050	.4247	.3797	.3851	.4603	.7253
.500	.3679	.3703	.3773	.3736	.5677
.950	.3924	.3871	.3948	.4546	.6668

NAAL 737 OA143 ORB/B67-MAIN GEAR TOP WALL CPS (RFCH60) (14 MAY 75)

REFERENCE DATA

SREF = 2690.0000 SQ.FT. XMRP = 1076.7000 IN.XO
LREF = 474.8000 IN. YMRP = .0000 IN.YO
BREF = 936.6800 IN. ZMRP = 375.0000 IN.ZO
SCALE = .0405

PARAMETRIC DATA

BETA = 8.000 BDFLAP = -11.700
ELEVON = 5.000 RUDDER = .000
SPDBRK = 25.000 GRDPLN = .000
LNGRPS = 1.000 LNDGDR = 100.000

SECTION (1)MN G. TOP WAL CPS DEPENDENT VARIABLE CP

MACH (1) = .230 ALPHA (1) = -4.130

X/L	.050	.250	.500	.750	.950
X/LW					
.050	-.0290	-.0341	-.0774	-.0686	.0817
.500	-.0338	-.0483	-.0795	-.0749	.0608
.950	-.0260	-.0483	-.0670	-.0637	.0477

MACH (1) = .230 ALPHA (2) = -2.050

X/L	.050	.250	.500	.750	.950
X/LW					
.050	.0251	-.0151	-.0404	-.0275	.1035
.500	.0075	-.0172	-.0432	-.0391	.1003
.950	.0119	-.0185	-.0334	-.0284	.1137

MACH (1) = .230 ALPHA (3) = .020

X/L	.050	.250	.500	.750	.950
X/LW					
.050	.0730	.0218	.0011	.0124	.1638
.500	.0431	.0184	-.0060	-.0048	.1454
.950	.0588	.0136	.0034	.0041	.1592

MACH (1) = .230 ALPHA (4) = 2.120

X/L	.050	.250	.500	.750	.950
X/LW					
.050	.1282	.0661	.0529	.0521	.2341
.500	.0817	.0621	.0438	.0288	.1839
.950	.1007	.0539	.0519	.0375	.2035

MACH (1) = .230 ALPHA (5) = 4.180

X/L	.050	.250	.500	.750	.950
X/LW					
.050	.1752	.1178	.1287	.1326	.3036
.500	.1161	.1189	.0000	.0884	.2000
.950	.1535	.1195	.1185	.1142	.3113

MACH (1) = .230 ALPHA (6) = 6.290

X/L	.050	.250	.500	.750	.950
X/LW					
.050	.2234	.1818	.1929	.2502	.4587
.500	.1696	.1831	.0000	.1755	.3373
.950	.1902	.1967	.1828	.2358	.4266

MACH (1) = .230 ALPHA (7) = 8.380

X/L	.050	.250	.500	.750	.950
X/LW					
.050	.2691	.2364	.2513	.3211	.5675
.500	.2114	.2337	.0000	.2350	.4254
.950	.2418	.2499	.2388	.3200	.5297

NAAL 737 OA143 ORB/B67-MAIN GEAR TOP WALL CPS (RFCH60)

SECTION (1)MN OR TOP WAL CPS DEPENDENT VARIABLE CP

MACH (1) = .230 ALPHA (8) = 9.020

X/L	.050	.250	.500	.750	.950
X/LW					
.050	.3951	.3981	.4309	.5004	.7374
.500	.3738	.3551	.4059	.4096	.5836
.950	.4066	.4509	.4188	.4633	.6882

MACH (1) = .230 ALPHA (9) = 10.480

X/L	.050	.250	.500	.750	.950
X/LW					
.050	.3104	.2739	.2932	.3826	.6583
.500	.2401	.2563	.2830	.2847	.4922
.950	.2813	.3006	.3060	.3854	.6012

MACH (1) = .230 ALPHA (10) = 12.590

X/L	.050	.250	.500	.750	.950
X/LW					
.050	.3356	.3137	.3293	.4292	.7034
.500	.2799	.2900	.3228	.3299	.5310
.950	.3130	.3461	.3464	.4488	.6430

MACH (1) = .230 ALPHA (11) = 14.680

X/L	.050	.250	.500	.750	.950
X/LW					
.050	.3612	.3544	.3753	.4640	.7196
.500	.3301	.3210	.3642	.3676	.5562
.950	.3571	.3963	.3834	.4629	.6669

MACH (1) = .230 ALPHA (12) = 18.890

X/L	.050	.250	.500	.750	.950
X/LW					
.050	.4367	.4509	.4916	.5333	.7496
.500	.4080	.3813	.4313	.4568	.6095
.950	.4617	.4965	.4543	.5026	.6993

NAAL 737 OA143 ORB/B66-MAIN GEAR RT SDWALL CPS (RFCI01) (14 MAY 75)

REFERENCE DATA

SREF =	2690.0000 SQ.FT.	XMRP =	1076.7000 IN.XO		
LREF =	474.8000 IN.	YMRP =	.0000 IN.YO		
BREF =	936.6800 IN.	ZMRP =	375.0000 IN.ZO		
SCALE =	.0405				

PARAMETRIC DATA

BETA =	.000	BDFLAP =	-11.700
ELEVON =	5.000	RUDDER =	.000
SPDBRK =	25.000	GRDPLN =	1.000
LNGRPS =	1.000	LNDGDR =	100.000

SECTION (1)MN GR RT SWAL CPS DEPENDENT VARIABLE CP

MACH (1) = .200 ALPHA (1) = .010

X/L	.050	.250	.500	.750	.950
X/LD					
.050	-.0358	-.0496	-.0957	-.0981	.0497
.500	-.0349	-.0639	-.0978	-.1110	-.1664
.950	-.0265	-.0572	-.0750	-.0390	-.0053

MACH (1) = .200 ALPHA (2) = 5.380

X/L	.050	.250	.500	.750	.950
X/LD					
.050	.2695	.1916	.1840	.2065	.3884
.500	.2191	.1799	.1608	.1435	.2811
.950	.2495	.1891	.1663	.1462	.0597

MACH (1) = .200 ALPHA (3) = 10.710

X/L	.050	.250	.500	.750	.950
X/LD					
.050	.4166	.3676	.3679	.4650	.7112
.500	.3767	.3559	.3536	.3091	.6885
.950	.3780	.3767	.3706	.2582	.1889

MACH (1) = .200 ALPHA (4) = 16.140

X/L	.050	.250	.500	.750	.950
X/LD					
.050	.5447	.5550	.5639	.6259	.7782
.500	.5224	.5208	.4972	.4885	.7684
.950	.5311	.5063	.5673	.4110	.3254

MACH (1) = .200 ALPHA (5) = 19.380

X/L	.050	.250	.500	.750	.950
X/LD					
.050	.6464	.6669	.6731	.6955	.8073
.500	.5944	.5825	.5857	.5760	.8043
.950	.6198	.6145	.6426	.5309	.4448

NAAL 737 OA143 ORB/B66-MAIN GEAR RT SDWALL CPS (RFC102) (14 MAY 75)

REFERENCE DATA

SREF =	2690.0000 SQ.FT.	XMRP =	1076.7000 IN.XO		
LREF =	474.8000 IN.	YMRP =	.0000 IN.YO		
BREF =	936.6800 IN.	ZMRP =	375.0000 IN.ZO		
SCALE =	.0405				

PARAMETRIC DATA

BETA =	-4.000	BDFLAP =	-11.700
ELEVON =	5.000	RUDDER =	.000
SPDBRK =	25.000	GRDPLN =	1.000
LNGRPS =	1.000	LNDGDR =	100.000

SECTION (1)MN GR RT SWAL CPS DEPENDENT VARIABLE CP

MACH (1) = .200 ALPHA (1) = .010

X/L	.050	.250	.500	.750	.950
X/LD					
.050	-.1128	-.1401	-.1718	-.1555	.0362
.500	-.1120	-.1556	-.1551	-.1535	-.1077
.950	-.0956	-.1116	-.1192	-.0501	-.2673

MACH (1) = .200 ALPHA (2) = 5.370

X/L	.050	.250	.500	.750	.950
X/LD					
.050	.1744	.1657	.1240	.1390	.2276
.500	.1723	.1444	.1210	.1220	.1346
.950	.1865	.1511	.1322	.1465	.1622

MACH (1) = .200 ALPHA (3) = 10.760

X/L	.050	.250	.500	.750	.950
X/LD					
.050	.4577	.3733	.3869	.4093	.6187
.500	.4024	.3771	.3509	.3322	.5198
.950	.4195	.3841	.3400	.3294	.2774

MACH (1) = .200 ALPHA (4) = 16.150

X/L	.050	.250	.500	.750	.950
X/LD					
.050	.5689	.5430	.5467	.6330	.8001
.500	.5467	.5315	.5330	.5138	.7783
.950	.5570	.5250	.5531	.4632	.3783

MACH (1) = .200 ALPHA (5) = 19.360

X/L	.050	.250	.500	.750	.950
X/LD					
.050	.6459	.6455	.6571	.7151	.8448
.500	.6352	.6262	.6310	.6139	.8354
.950	.6439	.6066	.6518	.5797	.4772

NAAL 737 OA143 ORB/B66-MAIN GEAR RT SOWALL CPS (RFC103) (14 MAY 75)

REFERENCE DATA

SREF = 2690.0000 SQ.FT. XMRP = 1076.7000 IN.XO
LREF = 474.8000 IN. YMRP = .0000 IN.YO
BREF = 936.6800 IN. ZMRP = 375.0000 IN.ZO
SCALE = .0405

PARAMETRIC DATA

BETA = -8.000 BDFLAP = -11.700
ELEVON = 5.000 RUDDER = .000
SPDBRK = 25.000 GRDPLN = 1.000
LNGRPS = 1.000 LNDGDR = 100.000

SECTION (1)MN GR RT SWAL CPS DEPENDENT VARIABLE CP

MACH (1) = .200 ALPHA (1) = .030

X/L	.050	.250	.500	.750	.950
X/LD					
.050	-.2151	-.2424	-.2643	-.2097	.1318
.500	-.2780	-.2550	-.3795	-.3151	.1683
.950	-.2667	-.1304	-.1927	-.2314	-.2171

MACH (1) = .200 ALPHA (2) = 5.380

X/L	.050	.250	.500	.750	.950
X/LD					
.050	.1235	.1122	.0661	.0480	.1974
.500	.1189	.1006	.0671	.0426	.0130
.950	.1393	.1118	.0960	.1334	.0402

MACH (1) = .200 ALPHA (3) = 10.760

X/L	.050	.250	.500	.750	.950
X/LD					
.050	.4100	.3533	.3302	.3570	.4711
.500	.3736	.3404	.3265	.3309	.4108
.950	.4133	.3462	.3275	.3269	.3204

MACH (1) = .200 ALPHA (4) = 16.170

X/L	.050	.250	.500	.750	.950
X/LD					
.050	.5972	.5413	.5495	.6027	.7688
.500	.5521	.5434	.5424	.5150	.7377
.950	.5678	.5401	.5204	.5005	.4626

MACH (1) = .200 ALPHA (5) = 19.400

X/L	.050	.250	.500	.750	.950
X/LD					
.050	.6593	.6346	.6379	.7011	.8325
.500	.6358	.6272	.6338	.6160	.8141
.950	.6486	.6169	.6355	.5811	.5303

NAAL 737 OA143 ORB/B66-MAIN GEAR RT SDWALL CPS (RFCI04) (14 MAY 75)

REFERENCE DATA

SREF =	2690.0000 SQ.FT.	XMRP =	1076.7000 IN.XO		
LREF =	474.8000 IN.	YMRP =	.0000 IN.YO		
BREF =	936.6800 IN.	ZMRP =	375.0000 IN.ZO		
SCALE =	.0405				

PARAMETRIC DATA

BETA =	4.000	BDFLAP =	-11.700
ELEVON =	5.000	RUDDER =	.000
SPDBRK =	25.000	GRDPLN =	1.000
LNGRPS =	1.000	LNDGDR =	100.000

SECTION (1)MN GR RT SWAL CPS DEPENDENT VARIABLE CP

MACH (1) = .200 ALPHA (1) = .000

X/L	.050	.250	.500	.750	.950
X/LD					
.050	.0424	-.0080	-.0317	-.0141	.1156
.500	.0132	-.0285	-.0442	-.0456	.0423
.950	.0578	-.0159	-.0429	-.0442	-.1167

MACH (1) = .200 ALPHA (2) = 5.340

X/L	.050	.250	.500	.750	.950
X/LD					
.050	.2343	.1859	.1855	.2629	.4893
.500	.1967	.1796	.1743	.1180	.4379
.950	.1926	.2026	.1835	.0812	-.0351

MACH (1) = .200 ALPHA (3) = 10.730

X/L	.050	.250	.500	.750	.950
X/LD					
.050	.4019	.4069	.4291	.5021	.6776
.500	.3824	.3765	.3524	.3395	.6613
.950	.3961	.3574	.4315	.2628	.0849

MACH (1) = .200 ALPHA (4) = 16.140

X/L	.050	.250	.500	.750	.950
X/LD					
.050	.5923	.6414	.6452	.6564	.7772
.500	.5147	.4965	.5251	.5082	.7694
.950	.5597	.5733	.5869	.4860	.3007

MACH (1) = .200 ALPHA (5) = 19.370

X/L	.050	.250	.500	.750	.950
X/LD					
.050	.6845	.7435	.7229	.7205	.8150
.500	.5902	.5562	.5848	.5982	.8046
.950	.6452	.6570	.6605	.5918	.4307

NAAL 737 OA143 ORB/B66-MAIN GEAR RT SDWALL CPS (RFC105) (14 MAY 75)

REFERENCE DATA

SREF = 2690.0000 SQ.FT. XMRP = 1076.7000 IN.XO
LREF = 474.8000 IN. YMRP = .0000 IN.YO
BREF = 936.6800 IN. ZMRP = 375.0000 IN.ZO
SCALE = .0405

PARAMETRIC DATA

BETA = 8.000 BDFLAP = -11.700
ELEVON = 5.000 RUDDER = .000
SPDBRK = 25.000 GRDPLN = 1.000
LNGRPS = 1.000 LNDGDR = 100.000

SECTION (1)MN GR RT SWAL CPS DEPENDENT VARIABLE CP

MACH (1) = .200 ALPHA (1) = .030

X/L	.050	.250	.500	.750	.950
X/LD					
.050	.0718	.0140	.0045	.0137	.1647
.500	.0348	.0003	-.0161	-.0310	.0946
.950	.0635	.0123	-.0188	-.0300	-.1320

MACH (1) = .200 ALPHA (2) = 5.360

X/L	.050	.250	.500	.750	.950
X/LD					
.050	.2804	.2708	.2935	.4018	.6414
.500	.2533	.2391	.2164	.2018	.6301
.950	.2683	.2296	.3091	.1142	-.1112

MACH (1) = .200 ALPHA (3) = 10.770

X/L	.050	.250	.500	.750	.950
X/LD					
.050	.4442	.4728	.5055	.5550	.7565
.500	.3874	.3832	.3720	.3378	.7508
.950	.4226	.4048	.4713	.3033	.0946

MACH (1) = .200 ALPHA (4) = 16.160

X/L	.050	.250	.500	.750	.950
X/LD					
.050	.6172	.6993	.6916	.6636	.7878
.500	.4982	.4532	.4945	.5073	.7854
.950	.5664	.5862	.6008	.5002	.2991

MACH (1) = .200 ALPHA (5) = 19.390

X/L	.050	.250	.500	.750	.950
X/LD					
.050	.6848	.7515	.7246	.6944	.8043
.500	.5829	.5434	.5630	.6003	.7824
.950	.6404	.6532	.6403	.6201	.4188

NAAL 737 OA143 ORB/B66-MAIN GEAR RT SDWALL CPS (RFC106) (14 MAY 75)

REFERENCE DATA

SREF =	2690.0000 SQ.FT.	XMRP =	1076.7000 IN.XO		
LREF =	474.8000 IN.	YMRP =	.0000 IN.YO		
BREF =	936.6800 IN.	ZMRP =	375.0000 IN.ZO		
SCALE =	.0405				

PARAMETRIC DATA

BETA =	.000	BDFLAP =	-11.700
ELEVON =	10.000	RUDDER =	.000
SPDBRK =	25.000	GRDPLN =	1.000
LNGRPS =	1.000	LNDGDR =	100.000

SECTION (1)MN GR RT SWAL CPS DEPENDENT VARIABLE CP

MACH (1) = .200 ALPHA (1) = .110

X/L	.050	.250	.500	.750	.950
X/LD					
.050	-.0026	-.0148	-.0589	-.0568	.0807
.500	-.0005	-.0287	-.0602	-.0711	-.1079
.950	.0082	-.0236	-.0388	-.0077	.0182

MACH (1) = .200 ALPHA (2) = 5.470

X/L	.050	.250	.500	.750	.950
X/LD					
.050	.3005	.2218	.2129	.2400	.4302
.500	.2460	.2084	.1879	.1729	.3139
.950	.2762	.2180	.1903	.1749	.1007

MACH (1) = .200 ALPHA (3) = 10.840

X/L	.050	.250	.500	.750	.950
X/LD					
.050	.4285	.3859	.3862	.4849	.7275
.500	.3967	.3777	.3680	.3332	.6913
.950	.3934	.3971	.4048	.2751	.2244

MACH (1) = .200 ALPHA (4) = 16.230

X/L	.050	.250	.500	.750	.950
X/LD					
.050	.5614	.5688	.5788	.6386	.7945
.500	.5416	.5395	.5130	.5056	.7847
.950	.5506	.5321	.5792	.4327	.3632

MACH (1) = .200 ALPHA (5) = 19.450

X/L	.050	.250	.500	.750	.950
X/LD					
.050	.6585	.6870	.6892	.7128	.8268
.500	.6053	.6003	.6015	.5911	.8214
.950	.6321	.6259	.6629	.5421	.4720

NAAL 737 OA143 ORB/B66-MAIN GEAR RT SDWALL CPS (RFC107) (14 MAY 75)

REFERENCE DATA

SREF = 2690.0000 SQ.FT. XMRP = 1076.7000 IN.XO
LREF = 474.8000 IN. YMRP = .0000 IN.YO
BREF = 936.6800 IN. ZMRP = 375.0000 IN.ZO
SCALE = .0405

PARAMETRIC DATA

BETA = -4.000 BDFLAP = -11.700
ELEVON = 10.000 RUDDER = .000
SPDBRK = 25.000 GRDPLN = 1.000
LNGRPS = 1.000 LNDGDR = 100.000

SECTION (1)MN GR RT SWAL CPS DEPENDENT VARIABLE CP

MACH (1) = .200 ALPHA (1) = .130

X/L	.050	.250	.500	.750	.950
X/LD					
.050	-.0720	-.0963	-.1197	-.1237	.0678
.500	-.0686	-.1172	-.1146	-.1227	-.1159
.950	-.0607	-.0770	-.0811	-.0219	-.2333

MACH (1) = .200 ALPHA (2) = 5.470

X/L	.050	.250	.500	.750	.950
X/LD					
.050	.2041	.1854	.1548	.1714	.2575
.500	.1991	.1700	.1510	.1510	.1851
.950	.2158	.1758	.1585	.1694	.1660

MACH (1) = .200 ALPHA (3) = 10.870

X/L	.050	.250	.500	.750	.950
X/LD					
.050	.4798	.3986	.4162	.4312	.6416
.500	.4302	.3998	.3764	.3552	.5453
.950	.4436	.4086	.3573	.3563	.3134

MACH (1) = .200 ALPHA (4) = 16.240

X/L	.050	.250	.500	.750	.950
X/LD					
.050	.5910	.5696	.5744	.6518	.8182
.500	.5675	.5576	.5549	.5356	.7922
.950	.5737	.5472	.5734	.4954	.4154

MACH (1) = .200 ALPHA (5) = 19.450

X/L	.050	.250	.500	.750	.950
X/LD					
.050	.6591	.6649	.6754	.7321	.8495
.500	.6497	.6427	.6395	.6315	.8360
.950	.6579	.6292	.6580	.5879	.5088

NAAL 737 OA143 ORB/B66-MAIN GEAR RT SDWALL CPS (RFC108) (14 MAY 75)

REFERENCE DATA

SREF =	2690.0000 SQ.FT.	XMRP =	1076.7000 IN.XO		
LREF =	474.8000 IN.	YMRP =	.0000 IN.YO		
BREF =	936.6800 IN.	ZMRP =	375.0000 IN.ZO		
SCALE =	.0405				

PARAMETRIC DATA

BETA =	-8.000	BDFLAP =	-11.700
ELEVON =	10.000	RUDDER =	.000
SPDBRK =	25.000	GRDPLN =	1.000
LNGRPS =	1.000	LNDGDR =	100.000

SECTION (1)MN GR RT SWAL CPS DEPENDENT VARIABLE CP

MACH (1) = .200 ALPHA (1) = .120

X/L	.050	.250	.500	.750	.950
X/LD					
.050	-.2676	-.2026	-.2209	-.1826	.1414
.500	-.2520	-.2160	-.2236	-.2670	.1823
.950	-.2315	-.1007	-.1121	-.1840	-.1941

MACH (1) = .200 ALPHA (2) = 5.490

X/L	.050	.250	.500	.750	.950
X/LD					
.050	.1538	.1405	.0984	.0834	.2263
.500	.1522	.1297	.0974	.0749	.0514
.950	.1663	.1384	.1259	.1603	.0926

MACH (1) = .200 ALPHA (3) = 10.870

X/L	.050	.250	.500	.750	.950
X/LD					
.050	.4377	.3768	.3572	.3813	.5018
.500	.3967	.3627	.3498	.3498	.4395
.950	.4356	.3693	.3552	.3491	.3471

MACH (1) = .200 ALPHA (4) = 16.230

X/L	.050	.250	.500	.750	.950
X/LD					
.050	.6114	.5544	.5634	.6120	.7814
.500	.5656	.5561	.5587	.5330	.7500
.950	.5805	.5495	.5307	.5131	.4929

MACH (1) = .200 ALPHA (5) = 19.440

X/L	.050	.250	.500	.750	.950
X/LD					
.050	.6767	.6474	.6552	.7155	.8431
.500	.6544	.6420	.6427	.6322	.8265
.950	.6610	.6313	.6491	.5955	.5523

NAAL 737 OA143 ORB/866-MAIN GEAR RT SDWALL CPS (RFC109) (14 MAY 75)

REFERENCE DATA

SREF = 2890.0000 SQ.FT. XMRP = 1078.7000 IN.XO
LREF = 474.8000 IN. YMRP = .0000 IN.YO
BREF = 936.6800 IN. ZMRP = 375.0000 IN.ZO
SCALE = .0405

PARAMETRIC DATA

BETA = 4.000 BDFLAP = -11.700
ELEVON = 10.000 RUDDER = .000
SPDBRK = 25.000 GRDPLN = 1.000
LNGRPS = 1.000 LNDGDR = 100.000

SECTION (1)MN GR RT SWAL CPS DEPENDENT VARIABLE CP

MACH (1) = .200 ALPHA (1) = .110

X/L	.050	.250	.500	.750	.950
X/LD					
.050	.0795	.0228	.0028	.0212	.1558
.500	.0478	.0040	-.0158	-.0158	.0829
.950	.0878	.0144	-.0124	-.0145	-.0822

MACH (1) = .200 ALPHA (2) = 5.450

X/L	.050	.250	.500	.750	.950
X/LD					
.050	.2501	.2106	.2094	.2966	.5032
.500	.2197	.2052	.2009	.1464	.4729
.950	.2052	.2202	.2176	.1141	-.0012

MACH (1) = .200 ALPHA (3) = 10.830

X/L	.050	.250	.500	.750	.950
X/LD					
.050	.4218	.4296	.4487	.5136	.6884
.500	.4011	.3924	.3716	.3520	.6688
.950	.4102	.3763	.4555	.2878	.1275

MACH (1) = .200 ALPHA (4) = 16.230

X/L	.050	.250	.500	.750	.950
X/LD					
.050	.6078	.6623	.6554	.6642	.7878
.500	.5309	.5107	.5338	.5196	.7800
.950	.5739	.5871	.6020	.4939	.3270

MACH (1) = .200 ALPHA (5) = 19.440

X/L	.050	.250	.500	.750	.950
X/LD					
.050	.6973	.7550	.7304	.7270	.8213
.500	.6025	.5741	.5940	.6132	.8099
.950	.6557	.6693	.6701	.6082	.4486

NAAL 737 OA143 ORB/B66-MAIN GEAR RT SDWALL CPS (RFC110) (14 MAY 75)

REFERENCE DATA

SREF = 2690.0000 SQ.FT. XMRP = 1076.7000 IN.XO
LREF = 474.8000 IN. YMRP = .0000 IN.YO
BREF = 936.6800 IN. ZMRP = 375.0000 IN.ZO
SCALE = .0405

PARAMETRIC DATA

BETA = 8.000 BDFLAP = -11.700
ELEVON = 10.000 RUDDER = .000
SPDBRK = 25.000 GRDPLN = 1.000
LNGRPS = 1.000 LNDGDR = 100.000

SECTION (1)MN GR RT SWAL CPS DEPENDENT VARIABLE CP

MACH (1) = .200 ALPHA (1) = .110

X/L	.050	.250	.500	.750	.950
X/LD					
.050	.1002	.0446	.0346	.0462	.1939
.500	.0643	.0341	.0117	-.0029	.1238
.950	.0860	.0400	.0103	-.0012	-.0916

MACH (1) = .200 ALPHA (2) = 5.430

X/L	.050	.250	.500	.750	.950
X/LD					
.050	.2992	.2954	.3147	.4228	.6521
.500	.2754	.2616	.2382	.2246	.6432
.950	.2896	.2524	.3286	.1451	-.0595

MACH (1) = .200 ALPHA (3) = 10.830

X/L	.050	.250	.500	.750	.950
X/LD					
.050	.4644	.4969	.5376	.5240	.7670
.500	.4057	.3990	.3992	.3662	.7653
.950	.4428	.4282	.4876	.3298	.1368

MACH (1) = .200 ALPHA (4) = 16.230

X/L	.050	.250	.500	.750	.950
X/LD					
.050	.6266	.7144	.6923	.6717	.7940
.500	.5115	.4794	.5076	.5244	.7839
.950	.5787	.5993	.6127	.5153	.3189

MACH (1) = .200 ALPHA (5) = 19.430

X/L	.050	.250	.500	.750	.950
X/LD					
.050	.6888	.7575	.7333	.7084	.8070
.500	.5904	.5513	.5800	.6106	.7925
.950	.6472	.6608	.6533	.6311	.4289

NAAL 737 OA143 ORB/866-MAIN GEAR RT SDWALL CPS (RFC111) (14 MAY 75)

REFERENCE DATA

SREF = 2690.0000 SQ.FT. XMRP = 1076.7000 IN.XO
LREF = 474.8000 IN. YMRP = .0000 IN.YO
BREF = 936.6800 IN. ZMRP = 375.0000 IN.ZO
SCALE = .0405

PARAMETRIC DATA

BETA = .000 BDFLAP = -11.700
ELEVON = 15.000 RUDDER = .000
SPDBRK = 25.000 GRDPLN = 1.000
LNGRPS = 1.000 LNDGDR = 100.000

SECTION (1)MN GR RT SWAL CPS DEPENDENT VARIABLE CP

MACH (1) = .200 ALPHA (1) = .190

X/L	.050	.250	.500	.750	.950
X/LD					
.050	.0287	.0166	-.0230	-.0234	.1041
.500	.0292	.0036	-.0264	-.0373	-.0631
.950	.0375	.0082	-.0087	.0216	.0315

MACH (1) = .200 ALPHA (2) = 5.560

X/L	.050	.250	.500	.750	.950
X/LD					
.050	.3272	.2423	.2416	.2655	.4757
.500	.2703	.2323	.2122	.1999	.3356
.950	.2971	.2423	.2153	.2010	.1309

MACH (1) = .200 ALPHA (3) = 10.920

X/L	.050	.250	.500	.750	.950
X/LD					
.050	.4478	.4078	.4114	.5074	.7350
.500	.4174	.3982	.3873	.3600	.7170
.950	.4086	.4211	.4311	.2981	.2444

MACH (1) = .200 ALPHA (4) = 16.300

X/L	.050	.250	.500	.750	.950
X/LD					
.050	.5795	.5906	.5965	.6491	.7909
.500	.5486	.5531	.5335	.5220	.7822
.950	.5638	.5403	.5911	.4587	.3896

MACH (1) = .200 ALPHA (5) = 19.510

X/L	.050	.250	.500	.750	.950
X/LD					
.050	.6664	.6910	.6900	.7140	.8197
.500	.6125	.6014	.6081	.5984	.8136
.950	.6394	.6374	.6689	.5506	.4887

NAAL 737 OA143 ORB/866-MAIN GEAR RT SDWALL CPS (RFCI12) (14 MAY 75)

REFERENCE DATA

SREF =	2690.0000 SQ.FT.	XMRP =	1076.7000 IN.XO		
LREF =	474.8000 IN.	YMRP =	.0000 IN.YO		
BREF =	936.6800 IN.	ZMRP =	375.0000 IN.ZO		
SCALE =	.0405				

PARAMETRIC DATA

BETA =	-4.000	BDFLAP =	-11.700
ELEVON =	15.000	RUDDER =	.000
SPDBRK =	25.000	GRDPLN =	1.000
LNGRPS =	1.000	LNDGDR =	100.000

SECTION (1)MN. GR RT SWAL CPS DEPENDENT VARIABLE CP

MACH (1) = .200 ALPHA (1) = .200

X/L	.050	.250	.500	.750	.950
X/LD					
.050	-.0403	-.0647	-.0929	-.0933	.0794
.500	-.0349	-.0840	-.0793	-.0980	-.0973
.950	-.0227	-.0504	-.0569	.0001	-.1900

MACH (1) = .200 ALPHA (2) = 5.570

X/L	.050	.250	.500	.750	.950
X/LD					
.050	.2367	.2058	.1817	.1991	.2868
.500	.2250	.1920	.1796	.1803	.2175
.950	.2475	.2012	.1851	.1895	.1697

MACH (1) = .200 ALPHA (3) = 10.970

X/L	.050	.250	.500	.750	.950
X/LD					
.050	.4947	.4174	.4361	.4541	.6596
.500	.4432	.4212	.4042	.3784	.5940
.950	.4631	.4282	.3719	.3753	.3526

MACH (1) = .200 ALPHA (4) = 16.300

X/L	.050	.250	.500	.750	.950
X/LD					
.050	.6070	.5871	.5953	.6667	.8243
.500	.5871	.5743	.5722	.5594	.8053
.950	.5954	.5652	.5936	.5106	.4401

MACH (1) = .200 ALPHA (5) = 19.500

X/L	.050	.250	.500	.750	.950
X/LD					
.050	.6774	.6774	.6880	.7449	.8545
.500	.6659	.6568	.6551	.6460	.8461
.950	.6721	.6363	.6716	.6100	.5334

NAAL 737 OA143 OR8/B66-MAIN GEAR RT SDWALL CPS (RFCI13) (14 MAY 75)

REFERENCE DATA

SREF = 2690.0000 SQ.FT. XMRP = 1076.7000 IN.XO
LREF = 474.8000 IN. YMRP = .0000 IN.YO
BREF = 936.6800 IN. ZMRP = 375.0000 IN.ZO
SCALE = .0405

PARAMETRIC DATA

BETA = -8.000 BDFLAP = -11.700
ELEVON = 15.000 RUDDER = .000
SPDBRK = 25.000 GRDPLN = 1.000
LNGRPS = 1.000 LNDGDR = 100.000

SECTION (1)MN GR RT SWAL CPS DEPENDENT VARIABLE CP

MACH (1) = .200 ALPHA (1) = .210

X/L	.050	.250	.500	.750	.950
X/LD					
.050	-.2260	-.1645	-.1684	-.1565	.0658
.500	-.2155	-.1733	-.1775	-.1751	.0409
.950	-.1055	-.0992	-.0824	-.0801	-.2451

MACH (1) = .200 ALPHA (2) = 5.590

X/L	.050	.250	.500	.750	.950
X/LD					
.050	.1826	.1701	.1290	.1147	.2497
.500	.1805	.1580	.1280	.1065	.0799
.950	.1926	.1634	.1546	.1870	.1501

MACH (1) = .200 ALPHA (3) = 10.970

X/L	.050	.250	.500	.750	.950
X/LD					
.050	.4704	.4041	.3830	.4131	.5449
.500	.4244	.3896	.3745	.3762	.4697
.950	.4625	.3949	.3796	.3769	.3718

MACH (1) = .200 ALPHA (4) = 16.340

X/L	.050	.250	.500	.750	.950
X/LD					
.050	.6213	.5708	.5760	.6315	.7943
.500	.5841	.5721	.5672	.5500	.7733
.950	.5973	.5671	.5527	.5266	.5057

MACH (1) = .200 ALPHA (5) = 19.520

X/L	.050	.250	.500	.750	.950
X/LD					
.050	.6893	.6593	.6653	.7198	.8478
.500	.6667	.6519	.6518	.6397	.8410
.950	.6758	.6407	.6505	.6101	.5774

NAAL 737 OA143 ORB/B66-MAIN GEAR RT SDWALL CPS (RFCI14) (14 MAY 75)

REFERENCE DATA

SREF = 2690.0000 SQ.FT. XMRP = 1076.7000 IN.XO
LREF = 474.8000 IN. YMRP = .0000 IN.YO
BREF = 936.6800 IN. ZMRP = 375.0000 IN.ZO
SCALE = .0405

PARAMETRIC DATA

BETA = 4.000 BDFLAP = -11.700
ELEVON = 15.000 RUDDER = .000
SPDBRK = 25.000 GRDPLN = 1.000
LNGRPS = 1.000 LNDGDR = 100.000

SECTION (1)MN GR RT SWAL CPS DEPENDENT VARIABLE CP

MACH (1) = .200 ALPHA (1) = .170

X/L	.050	.250	.500	.750	.950
X/LD					
.050	.1124	.0517	.0312	.0520	.2035
.500	.0756	.0316	.0131	.0127	.1170
.950	.1162	.0425	.0178	.0172	-.0468

MACH (1) = .200 ALPHA (2) = 5.550

X/L	.050	.250	.500	.750	.950
X/LD					
.050	.2698	.2352	.2350	.3227	.5266
.500	.2414	.2260	.2224	.1805	.4901
.950	.2343	.2431	.2548	.1416	.0383

MACH (1) = .200 ALPHA (3) = 10.910

X/L	.050	.250	.500	.750	.950
X/LD					
.050	.4437	.4524	.4724	.5378	.7011
.500	.4204	.4175	.3925	.3748	.6919
.950	.4316	.4025	.4779	.3036	.1699

MACH (1) = .200 ALPHA (4) = 16.300

X/L	.050	.250	.500	.750	.950

MACH (1) = .200 ALPHA (2) = 5.550

X/L	.050	.250	.500	.750	.950
X/LD					
.050	.2698	.2352	.2350	.3227	.5266
.500	.2414	.2260	.2224	.1805	.4901
.950	.2343	.2431	.2548	.1416	.0383

MACH (1) = .200 ALPHA (3) = 10.910

X/L	.050	.250	.500	.750	.950
X/LD					
.050	.4437	.4524	.4724	.5378	.7011
.500	.4204	.4175	.3925	.3748	.6919
.950	.4316	.4025	.4779	.3036	.1699

MACH (1) = .200 ALPHA (4) = 16.300

X/L	.050	.250	.500	.750	.950
X/LD					
.050	.6187	.6682	.6638	.6745	.7832
.500	.5422	.5228	.5453	.5359	.7795
.950	.5862	.5973	.6143	.5066	.3541

MACH (1) = .200 ALPHA (5) = 19.500

X/L	.050	.250	.500	.750	.950
X/LD					
.050	.6992	.7619	.7427	.7366	.8321
.500	.6130	.5816	.6074	.6277	.8206
.950	.6658	.6794	.6823	.6166	.4712

NAAL 737 OA143 ORB/B66-MAIN GEAR RT SOWALL CPS (RFC115) (14 MAY 75)

REFERENCE DATA

SREF = 2690.0000 SQ.FT. XMRP = 1076.7000 IN.XO
LREF = 474.8000 IN. YMRP = .0000 IN.YO
BREF = 936.6800 IN. ZMRP = 375.0000 IN.ZO
SCALE = .0405

PARAMETRIC DATA

BETA = 8.000 BDFLAP = -11.700
ELEVON = 15.000 RUDDER = .000
SPDBRK = 25.000 GRDPLN = 1.000
LNGRPS = 1.000 LNDGDR = 100.000

SECTION (1)MN GR RT SWAL CPS DEPENDENT VARIABLE CP

MACH (1) = .200 ALPHA (1) = .200

X/L	.050	.250	.500	.750	.950
X/LD					
.050	.1296	.0707	.0628	.0805	.2298
.500	.0924	.0612	.0328	.0287	.1487
.950	.1116	.0670	.0386	.0328	-.0507

MACH (1) = .200 ALPHA (2) = 5.550

X/L	.050	.250	.500	.750	.950
X/LD					
.050	.3194	.3198	.3408	.4470	.6709
.500	.2960	.2851	.2623	.2476	.6569
.950	.3131	.2697	.3589	.1670	-.0172

MACH (1) = .200 ALPHA (3) = 10.930

X/L	.050	.250	.500	.750	.950
X/LD					
.050	.4852	.5209	.5532	.5840	.7759
.500	.4239	.4140	.4185	.3846	.7732
.950	.4616	.4546	.5034	.3440	.1734

MACH (1) = .200 ALPHA (4) = 16.300

X/L	.050	.250	.500	.750	.950
X/LD					
.050	.6361	.7192	.7029	.6803	.7941
.500	.5224	.4840	.5194	.5326	.7850
.950	.5898	.6117	.6215	.5319	.3410

MACH (1) = .200 ALPHA (5) = 19.510

X/L	.050	.250	.500	.750	.950
X/LD					
.050	.6973	.7597	.7392	.7086	.8126
.500	.5993	.5644	.5862	.6198	.7925
.950	.6551	.6698	.6644	.6406	.4424

NAAL 737 OA143 ORB/B66-MAIN GEAR RT SDWALL CPS (RFC116) (14 MAY 75)

REFERENCE DATA

SREF = 2690.0000 SQ.FT. XMRP = 1076.7000 IN.XO
LREF = 474.8000 IN. YMRP = .0000 IN.YO
BREF = 936.6800 IN. ZMRP = 375.0000 IN.ZO
SCALE = .0405

PARAMETRIC DATA

BETA = .000 BDFLAP = -11.700
ELEVON = 15.000 RUDDER = .000
SPDBRK = 25.000 GRDPLN = .000
LNGRPS = 1.000 LNDGDR = 100.000

SECTION (1)MN GR RT SWAL CPS DEPENDENT VARIABLE CP

MACH (1) = .230 ALPHA (1) = .120

X/L	.050	.250	.500	.750	.950
X/LD					
.050	-.0036	-.0125	-.0467	-.0605	.0939
.500	.0041	-.0356	-.0508	-.0646	-.1153
.950	.0130	-.0230	-.0335	.0113	.0989

MACH (1) = .230 ALPHA (2) = 5.370

X/L	.050	.250	.500	.750	.950
X/LD					
.050	.1572	.1141	.0871	.1140	.2155
.500	.1387	.1013	.0851	.0892	.1510
.950	.1737	.1104	.0890	.0985	.0764

MACH (1) = .230 ALPHA (3) = 10.620

X/L	.050	.250	.500	.750	.950
X/LD					
.050	.3432	.2412	.2359	.2680	.5147
.500	.2758	.2295	.2038	.1953	.3615
.950	.3053	.2396	.2074	.1926	.1505

MACH (1) = .230 ALPHA (4) = 15.880

X/L	.050	.250	.500	.750	.950
X/LD					
.050	.4047	.3406	.3433	.4370	.7013
.500	.3564	.3348	.3223	.2854	.6696
.950	.3547	.3460	.3149	.2313	.2170

MACH (1) = .230 ALPHA (5) = 19.030

X/L	.050	.250	.500	.750	.950
X/LD					
.050	.4368	.4026	.4154	.5137	.7581
.500	.4073	.3868	.3736	.3566	.7432
.950	.3995	.4022	.4143	.2668	.2042

NAAL 737 OA143 ORB/B66-MAIN GEAR RT SDWALL CPS (RFCI17) (14 MAY 75)

REFERENCE DATA

SREF =	2690.0000 SQ.FT.	XMRP =	1076.7000 IN.XO		
LREF =	474.8000 IN.	YMRP =	.0000 IN.YO		
BREF =	936.6800 IN.	ZMRP =	375.0000 IN.ZO		
SCALE =	.0405				

PARAMETRIC DATA

BETA =	-4.000	BDFLAP =	-11.700
ELEVON =	15.000	RUDDER =	.000
SPDBRK =	25.000	GRDPLN =	.000
LNGRPS =	1.000	LNDGDR =	100.000

SECTION (1)MN GR RT SWAL CPS DEPENDENT VARIABLE CP

MACH (1) = .230 ALPHA (1) = .130

X/L	.050	.250	.500	.750	.950
X/LD					
.050	-.0644	-.0936	-.0992	-.1552	.0574
.500	-.0549	-.1210	-.1063	-.1297	-.0896
.950	-.0454	-.0881	-.0907	-.0317	-.1637

MACH (1) = .230 ALPHA (2) = 5.410

X/L	.050	.250	.500	.750	.950
X/LD					
.050	.0905	.0743	.0330	.0341	.1766
.500	.0909	.0581	.0363	.0169	-.0214
.950	.1057	.0622	.0524	.0865	.1474

MACH (1) = .230 ALPHA (3) = 10.640

X/L	.050	.250	.500	.750	.950
X/LD					
.050	.2726	.2104	.1809	.2129	.3449
.500	.2378	.1929	.1784	.1795	.2759
.950	.2847	.2010	.1801	.1818	.1936

MACH (1) = .230 ALPHA (4) = 15.910

X/L	.050	.250	.500	.750	.950
X/LD					
.050	.4347	.3376	.3416	.3626	.6064
.500	.3711	.3356	.3026	.2821	.4734
.950	.3978	.3434	.2959	.2852	.2567

MACH (1) = .230 ALPHA (5) = 19.060

X/L	.050	.250	.500	.750	.950
X/LD					
.050	.4690	.4008	.4007	.4778	.7167
.500	.4112	.4038	.3971	.3518	.6664
.950	.4320	.4058	.3653	.3183	.2879

NAAL 737 OA143 ORB/B66-MAIN GEAR RT SDWALL CPS (RFC118) (14 MAY 75)

REFERENCE DATA

SREF = 2690.0000 SQ.FT. XMRP = 1076.7000 IN.XO
LREF = 474.8000 IN. YMRP = .0000 IN.YO
BREF = 936.6800 IN. ZMRP = 375.0000 IN.ZO
SCALE = .0405

PARAMETRIC DATA

BETA = -8.000 BDFLAP = -11.700
ELEVON = 15.000 RUDDER = .000
SPDBRK = 25.000 GRDPLN = .000
LNGRPS = 1.000 LNDGDR = 100.000

SECTION (1)MN GR RT SWAL CPS DEPENDENT VARIABLE CP

MACH (1) = .230 ALPHA (1) = .140

X/L	.050	.250	.500	.750	.950
X/LD					
.050	-.1285	-.1651	-.2067	-.2333	-.0317
.500	-.1332	-.1824	-.2155	-.2481	-.0597
.950	-.1040	-.1478	-.1782	-.1324	-.1310

MACH (1) = .230 ALPHA (2) = 5.420

X/L	.050	.250	.500	.750	.950
X/LD					
.050	.0314	.0173	-.0294	-.0471	.1070
.500	.0277	-.0036	-.0272	-.0545	-.0365
.950	.0476	.0257	.0047	.0527	-.0258

MACH (1) = .230 ALPHA (3) = 10.650

X/L	.050	.250	.500	.750	.950
X/LD					
.050	.1938	.1823	.1463	.1435	.2694
.500	.1958	.1695	.1441	.1235	.1093
.950	.2134	.1702	.1567	.1775	.1886

MACH (1) = .230 ALPHA (4) = 15.920

X/L	.050	.250	.500	.750	.950
X/LD					
.050	.3776	.3108	.2831	.3173	.4601
.500	.3344	.2933	.2765	.2823	.3896
.950	.3813	.2987	.2790	.2759	.3032

MACH (1) = .230 ALPHA (5) = 19.070

X/L	.050	.250	.500	.750	.950
X/LD					
.050	.4700	.3842	.3694	.4005	.6079
.500	.4124	.3690	.3402	.3411	.4748
.950	.4485	.3771	.34FO	.3394	.3168

NAAL 737 OA143 ORB/B66-MAIN GEAR RT SDWALL CPS (RFC119) (14 MAY 75)

REFERENCE DATA

SREF = 2690.0000 SQ.FT. XMRP = 1076.7000 IN.XO
LREF = 474.8000 IN. YMRP = .0000 IN.YO
BREF = 936.6800 IN. ZMRP = 375.0000 IN.ZO
SCALE = .0405

PARAMETRIC DATA

BETA = 4.000 BDFLAP = -11.700
ELEVON = 15.000 RUDDER = .000
SPDBRK = 25.000 GRDPLN = .000
LNGRPS = 1.000 LNDGOR = 100.000

SECTION (1)MN GR RT SWAL CPS DEPENDENT VARIABLE CP

MACH (1) = .230 ALPHA (1) = .150

X/L	.050	.250	.500	.750	.950
X/LO					
.050	.0500	.0450	.0071	.0200	.1038
.500	.0497	.0220	.0011	-.0007	.0230
.950	.0642	.0247	.0090	.0262	.0385

MACH (1) = .230 ALPHA (2) = 5.360

X/L	.050	.250	.500	.750	.950
X/LO					
.050	.2075	.1383	.1200	.1492	.3279
.500	.1701	.1197	.0970	.0995	.2332
.950	.1984	.1299	.1038	.1011	.0574

MACH (1) = .230 ALPHA (3) = 10.620

X/L	.050	.250	.500	.750	.950
X/LO					
.050	.2830	.2480	.2524	.3351	.5212
.500	.2574	.2405	.2303	.2058	.4914
.950	.2537	.2429	.2546	.1571	.0698

MACH (1) = .230 ALPHA (4) = 15.860

X/L	.050	.250	.500	.750	.950
X/LO					
.050	.3842	.3637	.3805	.4785	.6887
.500	.3587	.3429	.3204	.3251	.6671
.950	.3593	.3385	.4036	.2170	.1082

MACH (1) = .230 ALPHA (5) = 19.040

X/L	.050	.250	.500	.750	.950
X/LO					
.050	.4394	.4417	.4666	.5508	.7361
.500	.4176	.4068	.3803	.3814	.7240
.950	.4259	.3914	.4617	.2781	.1391

NAAL 737 OA143 ORB/B66-MAIN GEAR RT SDWALL CPS (RFCI20) (14 MAY 75)

REFERENCE DATA

SREF = 2690.0000 SQ.FT. XMRP = 1076.7000 IN.XO
LREF = 474.6000 IN. YMRP = .0000 IN.YO
BREF = 936.6800 IN. ZMRP = 375.0000 IN.ZO
SCALE = .0405

PARAMETRIC DATA

BETA = 8.000 BDFLAP = -11.700
ELEVON = 15.000 RUDDER = .000
SPDBRK = 25.000 GRDPLN = .000
LNGRPS = 1.000 LNDGDR = 100.000

SECTION (1)MN GR RT SWAL CPS DEPENDENT VARIABLE CP

MACH (1) = .230 ALPHA (1) = .130

X/L	.050	.250	.500	.750	.950
X/LD					
.050	.0927	.0408	.0196	.0409	.1675
.500	.0634	.0226	.0071	.0120	.0989
.950	.1035	.0317	.0139	.0196	.0014

MACH (1) = .230 ALPHA (2) = 5.350

X/L	.050	.250	.500	.750	.950
X/LD					
.050	.2110	.1728	.1805	.2506	.4274
.500	.1799	.1674	.1649	.1443	.3940
.950	.1931	.1681	.1712	.1109	-.0002

MACH (1) = .230 ALPHA (3) = 10.610

X/L	.050	.250	.500	.750	.950
X/LD					
.050	.3274	.3042	.3253	.4356	.6581
.500	.2955	.2770	.2564	.2597	.6323
.950	.3082	.2770	.3258	.1583	.0390

MACH (1) = .230 ALPHA (4) = 15.840

X/L	.050	.250	.500	.750	.950
X/LD					
.050	.4027	.4142	.4550	.5343	.7529
.500	.3734	.3687	.3425	.3381	.7477
.950	.3960	.3582	.4266	.2466	.0950

MACH (1) = .230 ALPHA (5) = 19.010

X/L	.050	.250	.500	.750	.950
X/LD					
.050	.4661	.4998	.5458	.5802	.7786
.500	.4095	.4051	.4040	.3759	.7675
.950	.4479	.4291	.4745	.3056	.1318

NAAL 737 OA143 ORB/B66-MAIN GEAR RT SDWALL CPS (RFC121) (14 MAY 75)

REFERENCE DATA

SREF = 2690.0000 SQ.FT. XMRP = 1076.7000 IN.XO
LREF = 474.8000 IN. YMRP = .0000 IN.YO
BREF = 936.6800 IN. ZMRP = 375.0000 IN.ZO
SCALE = .0405

PARAMETRIC DATA

BETA = .000 BDFLAP = -11.700
ELEVON = 10.000 RUDDER = .000
SPDBRK = 25.000 GROPLN = .000
LNGRPS = 1.000 LNDGDR = 100.000

SECTION (1)MN GR RT SWAL CPS DEPENDENT VARIABLE CP

MACH (1) = .230 ALPHA (1) = .080

X/L	.050	.250	.500	.750	.950
X/LO					
.050	-.0205	-.0283	-.0704	-.0794	.0842
.500	-.0093	-.0526	-.0687	-.0827	-.1376
.950	-.0036	-.0371	-.0502	-.0037	.0716

MACH (1) = .230 ALPHA (2) = 5.340

X/L	.050	.250	.500	.750	.950
X/LO					
.050	.1412	.1050	.0733	.0999	.2002
.500	.1236	.0890	.0722	.0793	.1321
.950	.1578	.0968	.0774	.0870	.0599

MACH (1) = .230 ALPHA (3) = 10.550

X/L	.050	.250	.500	.750	.950
X/LO					
.050	.3260	.2253	.2182	.2509	.4923
.500	.2619	.2122	.1820	.1812	.3367
.950	.2911	.2223	.1905	.1851	.1310

MACH (1) = .230 ALPHA (4) = 15.810

X/L	.050	.250	.500	.750	.950
X/LO					
.050	.4003	.3254	.3303	.4205	.7025
.500	.3468	.3231	.3129	.2758	.6632
.950	.3505	.3502	.3029	.2179	.2052

MACH (1) = .230 ALPHA (5) = 18.580

X/L	.050	.250	.500	.750	.950
X/LO					
.050	.4330	.3932	.3986	.5079	.7566
.500	.4047	.3787	.3653	.3496	.7417
.950	.4030	.3878	.4146	.2499	.1904

NAAL 737 OA143 ORB/B66-MAIN GEAR RT SDWALL CPS (RFC122) (14 MAY 75)

REFERENCE DATA

SREF = 2690.0000 SQ.FT. XMRP = 1076.7000 IN.XO
LREF = 474.8000 IN. YMRP = .0000 IN.YO
BREF = 936.6800 IN. ZMRP = 375.0000 IN.ZO
SCALE = .0405

PARAMETRIC DATA

BETA = -4.000 BDFLAP = -11.700
ELEVON = 10.000 RUDDER = .000
SPDBRK = 25.000 GRDPLN = .000
LNGRPS = 1.000 LNDGDR = 100.000

SECTION (1)MN GR RT SWAL CPS DEPENDENT VARIABLE CP

MACH (1) = .230 ALPHA (1) = .090

X/L	.050	.250	.500	.750	.950
X/LD					
.050	-.0828	-.1093	-.1114	-.1603	.0179
.500	-.0756	-.1429	-.1202	-.1405	-.0987
.950	-.0552	-.0998	-.0998	-.0504	-.2045

MACH (1) = .230 ALPHA (2) = 5.300

X/L	.050	.250	.500	.750	.950
X/LD					
.050	.0753	.0580	.0151	.0197	.1655
.500	.0750	.0417	.0189	-.0007	-.0473
.950	.0885	.0512	.0389	.0726	.1307

MACH (1) = .230 ALPHA (3) = 10.570

X/L	.050	.250	.500	.750	.950
X/LD					
.050	.2519	.1963	.1652	.1934	.3258
.500	.2211	.1778	.1606	.1836	.2540
.950	.2674	.1862	.1647	.1663	.1792

MACH (1) = .230 ALPHA (4) = 15.810

X/L	.050	.250	.500	.750	.950
X/LD					
.050	.4187	.3206	.3286	.3448	.5802
.500	.3545	.3159	.2841	.2720	.4472
.950	.3838	.3293	.2844	.2709	.2292

MACH (1) = .230 ALPHA (5) = 18.980

X/L	.050	.250	.500	.750	.950
X/LD					
.050	.4593	.3841	.3958	.4606	.7119
.500	.4022	.3857	.3826	.3368	.6583
.950	.4254	.3834	.3535	.3074	.2723

NAAL 737 OA143 ORB/B66-MAIN GEAR RT SDWALL CPS (RFC123) (14 MAY 75)

REFERENCE DATA

SREF = 2690.0000 SQ.FT. XMRP = 1076.7000 IN.XO
LREF = 474.8000 IN. YMRP = .0000 IN.YO
BREF = 936.6800 IN. ZMRP = 375.0000 IN.ZO
SCALE = .0405

PARAMETRIC DATA

BETA = -8.000 BDFLAP = -11.700
ELEVON = 10.000 RUDDER = .000
SPDBRK = 25.000 GRDPLN = .000
LNGRPS = 1.000 LNDGDR = 100.000

SECTION (1)MN GR RT SWAL CPS DEPENDENT VARIABLE CP

MACH (1) = .230 ALPHA (1) = .100

X/L	.050	.250	.500	.750	.950
X/LD					
.050	-.1440	-.1820	-.2265	-.2542	-.0372
.500	-.1504	-.1953	-.2328	-.2702	-.0743
.950	-.1202	-.1610	-.1922	-.1501	-.1661

MACH (1) = .230 ALPHA (2) = 5.320

X/L	.050	.250	.500	.750	.950
X/LD					
.050	.0112	-.0009	-.0394	-.0679	.1179
.500	.0139	-.0182	-.0460	-.0676	-.0416
.950	.0316	.0075	-.0103	.0348	-.0665

MACH (1) = .230 ALPHA (3) = 10.590

X/L	.050	.250	.500	.750	.950
X/LD					
.050	.1827	.1686	.1280	.1256	.2607
.500	.1787	.1533	.1291	.1048	.0944
.950	.1989	.1520	.1458	.1663	.1633

MACH (1) = .230 ALPHA (4) = 15.850

X/L	.050	.250	.500	.750	.950
X/LD					
.050	.3627	.2977	.2701	.3023	.4389
.500	.3233	.2806	.2641	.2677	.3745
.950	.3701	.2880	.2649	.2668	.2883

MACH (1) = .230 ALPHA (5) = 19.010

X/L	.050	.250	.500	.750	.950
X/LD					
.050	.4571	.3707	.3547	.3882	.5890
.500	.4006	.3553	.3281	.3306	.4671
.950	.4396	.3650	.3344	.3262	.3116

NAAL 737 OA143 ORB/B66-MAIN GEAR RT SDWALL CPS (RFC124) (14 MAY 75)

REFERENCE DATA

SREF =	2690.0000 SQ.FT.	XMRP =	1076.7000 IN.XO
LREF =	474.8000 IN.	YMRP =	.0000 IN.YO
BREF =	936.6800 IN.	ZMRP =	375.0000 IN.ZO
SCALE =	.0405		

PARAMETRIC DATA

BETA =	4.000	BDFLAP =	-11.700
ELEVON =	10.000	RUDDER =	.000
SPDBRK =	25.000	GRDPLN =	.000
LNGRPS =	1.000	LNDGDR =	100.000

SECTION (1)MN GR RT SWAL CPS DEPENDENT VARIABLE CP

MACH (1) = .230 ALPHA (1) = .070

X/L	.050	.250	.500	.750	.950
X/LD					
.050	.0354	.0310	-.0086	.0030	.0950
.500	.0357	.0135	-.0157	-.0181	.0011
.950	.0475	.0095	-.0010	.0153	.0324

MACH (1) = .230 ALPHA (2) = 5.290

X/L	.050	.250	.500	.750	.950
X/LD					
.050	.1955	.1289	.1080	.1384	.3083
.500	.1573	.1059	.0812	.0840	.2213
.950	.1901	.1151	.0902	.0878	.0476

MACH (1) = .230 ALPHA (3) = 10.530

X/L	.050	.250	.500	.750	.950
X/LD					
.050	.2665	.2295	.2341	.3165	.5079
.500	.2372	.2231	.2201	.1811	.4820
.950	.2352	.2302	.2253	.1344	.0450

MACH (1) = .230 ALPHA (4) = 15.790

X/L	.050	.250	.500	.750	.950
X/LD					
.050	.3739	.3550	.3708	.4674	.6860
.500	.3473	.3308	.3117	.3120	.6632
.950	.3468	.3261	.3860	.2081	.0767

MACH (1) = .230 ALPHA (5) = 18.950

X/L	.050	.250	.500	.750	.950
X/LD					
.050	.4281	.4241	.4512	.5318	.7281
.500	.4051	.3954	.3738	.3722	.7169
.950	.4168	.3770	.4487	.2623	.1023

NAAL 737 OA143 ORB/B66-MAIN GEAR RT SDWALL CPS (RFC125) (14 MAY 75)

REFERENCE DATA

SREF = 2690.0000 SQ.FT. XMRP = 1076.7000 IN.XO
LREF = 474.8000 IN. YMRP = .0000 IN.YO
BREF = 936.6800 IN. ZMRP = 375.0000 IN.ZO
SCALE = .0405

PARAMETRIC DATA

BETA = 8.000 BDFLAP = -11.700
ELEVON = 10.000 RUDDER = .000
SPDBRK = 25.000 GRDPLN = .000
LNGRPS = 1.000 LNDGOR = 100.000

SECTION (1)MN GR RT SWAL CPS DEPENDENT VARIABLE CP

MACH (1) = .230 ALPHA (1) = .100

X/L	.050	.250	.500	.750	.950
X/LD					
.050	.0853	.0274	.0033	.0317	.1671
.500	.0538	.0122	-.0089	-.0004	.0914
.950	.0917	.0220	.0000	.0077	-.0095

MACH (1) = .230 ALPHA (2) = 5.310

X/L	.050	.250	.500	.750	.950
X/LD					
.050	.1980	.1570	.1664	.2393	.4132
.500	.1661	.1597	.1584	.1312	.3773
.950	.1827	.1471	.1631	.0983	-.0109

MACH (1) = .230 ALPHA (3) = 10.550

X/L	.050	.250	.500	.750	.950
X/LD					
.050	.3148	.2904	.3084	.4221	.6578
.500	.2834	.2621	.2433	.2419	.6272
.950	.2925	.2661	.3172	.1365	.0107

MACH (1) = .230 ALPHA (4) = 15.830

X/L	.050	.250	.500	.750	.950
X/LD					
.050	.3880	.4004	.4342	.5222	.7474
.500	.3590	.3536	.3299	.3266	.7322
.950	.3823	.3334	.4215	.2184	.0645

MACH (1) = .230 ALPHA (5) = 18.970

X/L	.050	.250	.500	.750	.950
X/LD					
.050	.4490	.4803	.5202	.5697	.7706
.500	.3996	.3932	.3798	.3622	.7596
.950	.4319	.4124	.4562	.2879	.0975

NAAL 737 OA143 ORB/B66-MAIN GEAR RT SDWALL CPS (RFC126) (14 MAY 75)

REFERENCE DATA

SREF =	2690.0000 SQ.FT.	XMRP =	1076.7000 IN.XO		
LREF =	474.8000 IN.	YMRP =	.0000 IN.YO		
BREF =	936.6800 IN.	ZMRP =	375.0000 IN.ZO		
SCALE =	.0405				

PARAMETRIC DATA

BETA =	8.000	BDFLAP =	-11.700
ELEVON =	10.000	RUDDER =	.000
SPDBRK =	25.000	GRDPLN =	.000
LNGRPS =	.000	LNDGDR =	.000

SECTION (1)MN GR RT SWAL CPS DEPENDENT VARIABLE CP

MACH (1) = .230 ALPHA (1) = .070

X/L	.050	.250	.500	.750	.950
X/LD					
.050	-.0881	-.0905	-.0858	-.0879	-.0874
.500	-.0874	-.0885	-.0827	-.0885	-.0890
.950	-.0599	-.0552	-.0701	-.0874	-.0871

MACH (1) = .230 ALPHA (2) = 5.330

X/L	.050	.250	.500	.750	.950
X/LD					
.050	-.0219	-.0158	-.0147	-.0128	-.0155
.500	-.0206	-.0199	-.0150	-.0147	-.0152
.950	.0119	.0146	.0030	-.0150	-.0185

MACH (1) = .230 ALPHA (3) = 10.570

X/L	.050	.250	.500	.750	.950
X/LD					
.050	.0553	.0539	.0564	.0575	.0562
.500	.0559	.0553	.0581	.0573	.0567
.950	.0810	.0939	.0775	.0584	.0559

MACH (1) = .230 ALPHA (4) = 15.850

X/L	.050	.250	.500	.750	.950
X/LD					
.050	.1355	.1355	.1316	.1371	.1343
.500	.1339	.1369	.1346	.1349	.1349
.950	.1561	.1753	.1629	.1379	.1360

MACH (1) = .230 ALPHA (5) = 19.010

X/L	.050	.250	.500	.750	.950
X/LD					
.050	.1830	.1814	.1815	.1820	.1809
.500	.1817	.1814	.1817	.1809	.1823
.950	.1984	.2249	.2089	.1837	.1839

NAAL 737 OA143 ORB/B66-MAIN GEAR RT SDWALL CPS (RFC127) (14 MAY 75)

REFERENCE DATA

SREF = 2690.0000 SQ.FT. XMRP = 1076.7000 IN.XO
LREF = 474.8000 IN. YMRP = .0000 IN.YO
BREF = 936.6800 IN. ZMRP = 375.0000 IN.ZO
SCALE = .0405

PARAMETRIC DATA

BETA = 8.000 BDFLAP = -11.700
ELEVON = 10.000 RUDDER = .000
SPDBRK = 25.000 GRDPLN = .000
LNGRPS = .000 LNDGDR = 40.000

SECTION (1)MN GR RT SWAL CPS DEPENDENT VARIABLE CP

MACH (1) = .230 ALPHA (1) = .080

X/L	.050	.250	.500	.750	.950
X/LD					
.050	-.0395	-.0652	-.0992	-.0962	.0539
.500	-.0561	-.0693	-.0888	-.0967	-.0614
.950	-.0547	-.0594	-.0814	-.0735	.0588

MACH (1) = .230 ALPHA (2) = 5.320

X/L	.050	.250	.500	.750	.950
X/LD					
.050	.1018	.0523	.0554	.0617	.1690
.500	.0659	.0557	.0316	.0203	.1130
.950	.0866	.0642	.0157	.0071	.0044

MACH (1) = .230 ALPHA (3) = 10.550

X/L	.050	.250	.500	.750	.950
X/LD					
.050	.2323	.1624	.1842	.2986	.5223
.500	.1837	.1779	.1444	.1290	.3541
.950	.1877	.1965	.1905	.0263	.0658

MACH (1) = .230 ALPHA (4) = 15.820

X/L	.050	.250	.500	.750	.950
X/LD					
.050	.3177	.2639	.2870	.4109	.6565
.500	.2848	.2774	.2504	.2452	.5164
.950	.2902	.2660	.3158	.1113	.1511

MACH (1) = .230 ALPHA (5) = 18.970

X/L	.050	.250	.500	.750	.950
X/LD					
.050	.3636	.3301	.3497	.4648	.6739
.500	.3421	.3371	.3105	.3168	.5890
.950	.3455	.3177	.3941	.1868	.1887

NAAL 737 OA143 ORB/B66-MAIN GEAR RT SDWALL CPS (RFC129) (14 MAY 75)

REFERENCE DATA

SREF = 2690.0000 SQ.FT. XMRP = 1076.7000 IN.XO
LREF = 474.8000 IN. YMRP = .0000 IN.YO
BREF = 936.6800 IN. ZMRP = 375.0000 IN.ZO
SCALE = .0405

PARAMETRIC DATA

BETA = 8.000 BDFLAP = -11.700
ELEVON = 10.000 RUDDER = .000
SPDBRK = 25.000 GRDPLN = .000
LNGRPS = .000 LNDGDR = 80.000

SECTION (1)MN GR RT SWAL CPS DEPENDENT VARIABLE CP

MACH (1) = .230 ALPHA (1) = .090

X/L	.050	.250	.500	.750	.950
X/LD					
.050	.0044	-.0405	-.0713	-.0680	.1018
.500	-.0384	-.0432	-.0795	-.1014	.0096
.950	.0098	-.0405	-.0869	-.1227	-.0464

MACH (1) = .230 ALPHA (2) = 5.330

X/L	.050	.250	.500	.750	.950
X/LD					
.050	.1349	.0863	.0995	.1643	.3332
.500	.1025	.0879	.0640	.0470	.2016
.950	.1089	.1045	.0640	-.0084	.0186

MACH (1) = .230 ALPHA (3) = 10.560

X/L	.050	.250	.500	.750	.950
X/LD					
.050	.2533	.2057	.2287	.3877	.6728
.500	.2267	.2186	.1843	.1942	.5726
.950	.2287	.2024	.2977	.0403	.1050

MACH (1) = .230 ALPHA (4) = 15.810

X/L	.050	.250	.500	.750	.950
X/LD					
.050	.3394	.3033	.3443	.5215	.7419
.500	.3114	.3010	.2860	.3289	.6948
.950	.3215	.2801	.4164	.1298	.1762

MACH (1) = .230 ALPHA (5) = 18.970

X/L	.050	.250	.500	.750	.950
X/LD					
.050	.3835	.3660	.4234	.5811	.7753
.500	.3667	.3526	.3495	.3943	.7283
.950	.3744	.3425	.4421	.1754	.2051

NAAL 737 OA143 ORB/B66-MAIN GEAR RT SDWALL CPS (RFC130) (14 MAY 75)

REFERENCE DATA

SREF = 2690.0000 SQ.FT. XMRP = 1076.7000 IN.XO
LREF = 474.8000 IN. YMRP = .0000 IN.YO
BREF = 936.6800 IN. ZMRP = 375.0000 IN.ZO
SCALE = .0405

PARAMETRIC DATA

BETA = .000 BDFLAP = -11.700
ELEVON = 5.000 RUDDER = .000
SPDBRK = 25.000 GRDPLN = .000
LNGRPS = 1.000 LNDGDR = 100.000

SECTION (1)MN GR RT SWAL CPS DEPENDENT VARIABLE CP

MACH (1) = .230 ALPHA (1) = .010

X/L	.050	.250	.500	.750	.950
X/LD					
.050	-.0385	-.0520	-.0842	-.0984	.0685
.500	-.0273	-.0747	-.0834	-.1012	-.1562
.950	-.0232	-.0534	-.0670	-.0180	.0540

MACH (1) = .230 ALPHA (2) = 5.240

X/L	.050	.250	.500	.750	.950
X/LD					
.050	.1245	.0857	.0562	.0807	.1830
.500	.1076	.0715	.0534	.0554	.1091
.950	.1363	.0810	.0581	.0698	.0423

MACH (1) = .230 ALPHA (3) = 10.470

X/L	.050	.250	.500	.750	.950
X/LD					
.050	.3088	.2142	.2002	.2352	.4653
.500	.2429	.1967	.1662	.1632	.3202
.950	.2819	.2065	.1777	.1637	.1164

MACH (1) = .230 ALPHA (4) = 15.730

X/L	.050	.250	.500	.750	.950
X/LD					
.050	.3918	.3109	.3247	.4007	.6717
.500	.3343	.3143	.3112	.2573	.6344
.950	.3366	.3214	.2871	.2114	.1906

MACH (1) = .230 ALPHA (5) = 18.890

X/L	.050	.250	.500	.750	.950
X/LD					
.050	.4210	.3808	.3856	.4897	.7413
.500	.3879	.3680	.3586	.3279	.7239
.950	.3795	.3838	.3945	.2434	.1830

NAAL 737 OA143 ORB/B86-MAIN GEAR RT SOWALL CPS (RFC131) (14 MAY 75)

REFERENCE DATA

SREF = 2690.0000 SQ.FT. XMRP = 1076.7000 IN.XO
LREF = 474.8000 IN. YMRP = .0000 IN.YO
BREF = 936.6800 IN. ZMRP = 375.0000 IN.ZO
SCALE = .0405

PARAMETRIC DATA

BETA = -4.000 BDFLAP = -11.700
ELEVON = 5.000 RUDDER = .000
SPDBRK = 25.000 GRDPLN = .000
LNGRPS = 1.000 LNDGDR = 100.000

SECTION (1)MN GR RT SWAL CPS DEPENDENT VARIABLE CP

MACH (1) = .230 ALPHA (1) = .000

X/L	.050	.250	.500	.750	.950
X/LD					
.050	-.1018	-.1333	-.1423	-.1842	.0301
.500	-.0937	-.1604	-.1436	-.1622	-.0933
.950	-.0764	-.1225	-.1228	-.0681	-.2545

MACH (1) = .230 ALPHA (2) = 5.250

X/L	.050	.250	.500	.750	.950
X/LD					
.050	.0566	.0440	-.0026	-.0073	.1516
.500	.0603	.0264	-.0018	-.0177	-.0770
.950	.0731	.0295	.0197	.0575	.1021

MACH (1) = .230 ALPHA (3) = 10.480

X/L	.050	.250	.500	.750	.950
X/LD					
.050	.2336	.1790	.1471	.1773	.3054
.500	.2049	.1620	.1430	.1507	.2313
.950	.2492	.1668	.1460	.1490	.1567

MACH (1) = .230 ALPHA (4) = 15.760

X/L	.050	.250	.500	.750	.950
X/LD					
.050	.4049	.3086	.3057	.3316	.5694
.500	.3423	.2975	.2713	.2581	.4235
.950	.3716	.3022	.2735	.2548	.2182

MACH (1) = .230 ALPHA (5) = 18.910

X/L	.050	.250	.500	.750	.950
X/LD					
.050	.4497	.3720	.3875	.4433	.6918
.500	.3986	.3764	.3674	.3256	.6307
.950	.4198	.3744	.3242	.2976	.2613

NAAL 737 OA143 ORB/B66-MAIN GEAR RT SDWALL CPS (RFC132) (14 MAY 75)

REFERENCE DATA

SREF = 2690.0000 SQ.FT. XMRP = 1076.7000 IN.XO
LREF = 474.8000 IN. YMRP = .0000 IN.YO
BREF = 936.6800 IN. ZMRP = 375.0000 IN.ZO
SCALE = .0405

PARAMETRIC DATA

BETA = -8.000 BDFLAP = -11.700
ELEVON = 5.000 RUDDER = .000
SPDBRK = 25.000 GRDPLN = .000
LNGRPS = 1.000 LNDGDR = 100.000

SECTION (1)MN GR RT SWAL CPS DEPENDENT VARIABLE CP

MACH (1) = .230 ALPHA (1) = .050

X/L	.050	.250	.500	.750	.950
X/LD					
.050	-.1712	-.2034	-.2462	-.2750	-.0461
.500	-.1709	-.2207	-.2490	-.2931	-.0828
.950	-.1411	-.1763	-.2137	-.1729	-.1693

MACH (1) = .230 ALPHA (2) = 5.250

X/L	.050	.250	.500	.750	.950
X/LD					
.050	-.0107	-.0300	-.0607	-.0777	.0841
.500	-.0063	-.0443	-.0637	-.0911	-.0432
.950	.0109	-.0175	-.0193	.0307	-.1287

MACH (1) = .230 ALPHA (3) = 10.520

X/L	.050	.250	.500	.750	.950
X/LD					
.050	.1594	.1489	.1051	.1024	.2409
.500	.1581	.1294	.1073	.0863	.0601
.950	.1743	.1348	.1231	.1504	.1408

MACH (1) = .230 ALPHA (4) = 15.790

X/L	.050	.250	.500	.750	.950
X/LD					
.050	.3462	.2813	.2522	.2842	.4188
.500	.3084	.2638	.2499	.2513	.3566
.950	.3574	.2705	.2477	.2472	.2743

MACH (1) = .230 ALPHA (5) = 18.980

X/L	.050	.250	.500	.750	.950
X/LD					
.050	.4412	.3570	.3377	.3712	.5590
.500	.3856	.3379	.3133	.3150	.4501
.950	.4251	.3483	.3169	.3092	.2988

NAAL 737 OA143 ORB/B66-MAIN GEAR RT SDWALL CPS (RFCI33) (14 MAY 75)

REFERENCE DATA

SREF =	2690.0000 SQ.FT.	XMRP =	1076.7000 IN.XO		
LREF =	474.8000 IN.	YMRP =	.0000 IN.YO		
BREF =	936.6800 IN.	ZMRP =	375.0000 IN.ZO		
SCALE =	.0405				

PARAMETRIC DATA

BETA =	4.000	BDFLAP =	-11.700
ELEVON =	5.000	RUDDER =	.000
SPDBRK =	25.000	GRDPLN =	.000
LNGRPS =	1.000	LNDGDR =	100.000

SECTION (1)MN GR RT SWAL CPS DEPENDENT VARIABLE CP

MACH (1) = .230 ALPHA (1) = .010

X/L	.050	.250	.500	.750	.950
X/LD					
.050	.0194	.0157	-.0274	-.0180	.0803
.500	.0181	-.0040	-.0304	-.0411	-.0304
.950	.0354	-.0067	-.0194	-.0032	.0264

MACH (1) = .230 ALPHA (2) = 5.230

X/L	.050	.250	.500	.750	.950
X/LD					
.050	.1819	.1094	.0904	.1180	.2877
.500	.1409	.0854	.0638	.0698	.2059
.950	.1782	.0979	.0728	.0720	.0362

MACH (1) = .230 ALPHA (3) = 10.470

X/L	.050	.250	.500	.750	.950
X/LD					
.050	.2577	.2159	.2167	.2911	.4900
.500	.2247	.2095	.2107	.1659	.4545
.950	.2290	.2139	.2201	.1306	.0383

MACH (1) = .230 ALPHA (4) = 15.750

X/L	.050	.250	.500	.750	.950
X/LD					
.050	.3616	.3363	.3507	.4538	.6814
.500	.3357	.3178	.2981	.2945	.6591
.950	.3367	.3178	.3776	.1875	.0689

MACH (1) = .230 ALPHA (5) = 18.910

X/L	.050	.250	.500	.750	.950
X/LD					
.050	.4133	.4143	.4363	.5275	.7251
.500	.3988	.3870	.3670	.3607	.7121
.950	.4052	.3685	.4560	.2508	.0892

NAAL 737 OA143 ORB/B66-MAIN GEAR RT SDWALL CPS (RFCI34) (14 MAY 75)

REFERENCE DATA

SREF = 2690.0000 SQ.FT. XMRP = 1076.7000 IN.XO
LREF = 474.8000 IN. YMRP = .0000 IN.YO
BREF = 936.6800 IN. ZMRP = 375.0000 IN.ZO
SCALE = .0405

PARAMETRIC DATA

BETA = 8.000 BDFLAP = -11.700
ELEVON = 5.000 RUDDER = .000
SPDBRK = 25.000 GRDPLN = .000
LNGRPS = 1.000 LNDGDR = 100.000

SECTION (1)MN GR RT SWAL CPS DEPENDENT VARIABLE CP

MACH (1) = .230 ALPHA (1) = -4.170

X/L	.050	.250	.500	.750	.950
X/LD					
.050	-.0296	-.0344	-.0808	-.0660	.0375
.500	-.0333	-.0611	-.0852	-.0879	-.0589
.950	-.0134	-.0601	-.0775	-.0559	-.0228

MACH (1) = .230 ALPHA (2) = -2.060

X/L	.050	.250	.500	.750	.950
X/LD					
.050	.0187	-.0185	-.0465	-.0226	.0883
.500	.0031	-.0358	-.0539	-.0495	.0143
.950	.0394	-.0273	-.0484	-.0366	-.0358

MACH (1) = .230 ALPHA (3) = .020

X/L	.050	.250	.500	.750	.950
X/LD					
.050	.0691	.0159	-.0067	.0194	.1510
.500	.0440	-.0005	-.0207	-.0127	.0766
.950	.0796	.0095	-.0127	-.0048	-.0229

MACH (1) = .230 ALPHA (4) = 2.090

X/L	.050	.250	.500	.750	.950
X/LD					
.050	.1203	.0617	.0458	.0655	.2305
.500	.0871	.0424	.0233	.0249	.1520
.950	.1176	.0532	.0312	.0301	-.0254

MACH (1) = .230 ALPHA (5) = 4.170

X/L	.050	.250	.500	.750	.950
X/LD					
.050	.1705	.1173	.1268	.1545	.2983
.500	.1393	.1169	.1101	.0835	.2561
.950	.1471	.1234	.0846	.0877	.0222

MACH (1) = .230 ALPHA (6) = 6.270

X/L	.050	.250	.500	.750	.950
X/LD					
.050	.2177	.1865	.1943	.2765	.4701
.500	.1892	.1747	.1741	.1467	.4399
.950	.2014	.1679	.1846	.0948	-.0246

MACH (1) = .230 ALPHA (7) = 8.370

X/L	.050	.250	.500	.750	.950
X/LD					
.050	.2685	.2372	.2490	.3585	.5903
.500	.2345	.2159	.2038	.1945	.5713
.950	.2452	.2196	.2515	.1096	-.0138

NAAL 737 OA143 ORB/B66-MAIN GEAR RT SDWALL CPS (RFC134)

SECTION (1)MN GR RT SWAL CPS DEPENDENT VARIABLE CP

MACH (1) = .230 ALPHA (8) = 10.470

X/L	.050	.250	.500	.750	.950
X/LD					
.050	.3066	.2786	.2954	.4208	.6788
.500	.2722	.2530	.2342	.2284	.6622
.950	.2867	.2506	.3114	.1207	.0025

MACH (1) = .230 ALPHA (9) = 12.570

X/L	.050	.250	.500	.750	.950
X/LD					
.050	.3335	.3190	.3376	.4674	.7155
.500	.3063	.2867	.2644	.2697	.7089
.950	.3177	.2743	.3585	.1417	.0281

MACH (1) = .230 ALPHA (10) = 14.650

X/L	.050	.250	.500	.750	.950
X/LD					
.050	.3635	.3595	.3824	.5009	.7372
.500	.3387	.3252	.3022	.3052	.7257
.950	.3541	.3087	.3868	.1854	.0429

MACH (1) = .230 ALPHA (11) = 16.770

X/L	.050	.250	.500	.750	.950
X/LD					
.050	.3955	.4090	.4424	.5358	.7510
.500	.3665	.3601	.3363	.3300	.7452
.950	.3881	.3507	.4236	.2236	.0695

MACH (1) = .230 ALPHA (12) = 18.880

X/L	.050	.250	.500	.750	.950
X/LD					
.050	.4378	.4637	.5059	.5629	.7368
.500	.3892	.3878	.3753	.3571	.7619
.950	.4227	.3999	.4499	.2770	.0940

NAAL 737 OA143 ORB/B65-MAIN GEAR RT SDWALL CPS (RFC135) (14 MAY 75)

REFERENCE DATA

SREF = 2690.0000 SQ.FT. XMRP = 1076.7000 IN.XO
LREF = 474.8000 IN. YMRP = .0000 IN.YO
BREF = 936.6800 IN. ZMRP = 375.0000 IN.ZO
SCALE = .0405

PARAMETRIC DATA

BETA = .000 BDFLAP = -11.700
ELEVON = 5.000 RUDDER = .000
SPDBRK = 25.000 GRDPLN = .000
LNGRPS = 1.000 LNDGDR = 100.000

SECTION (1)MN GR RT SWAL CPS DEPENDENT VARIABLE CP

MACH (1) = .230 ALPHA (1) = .030

X/L	.050	.250	.500	.750	.950
X/LD					
.050	-.0361	-.0497	-.0856	-.0966	.0712
.500	-.0243	-.0697	-.0831	-.0979	-.1601
.950	-.0202	-.0521	-.0664	-.0152	.0512

MACH (1) = .230 ALPHA (2) = 5.230

X/L	.050	.250	.500	.750	.950
X/LD					
.050	.1186	.0875	.0560	.0797	.1774
.500	.1067	.0696	.0543	.0601	.1097
.950	.1365	.0770	.0579	.0696	.0363

MACH (1) = .230 ALPHA (3) = 10.470

X/L	.050	.250	.500	.750	.950
X/LD					
.050	.3047	.2117	.1985	.2340	.4649
.500	.2441	.1939	.1691	.1595	.3238
.950	.2818	.2060	.1762	.1633	.1209

MACH (1) = .230 ALPHA (4) = 15.750

X/L	.050	.250	.500	.750	.950
X/LD					
.050	.3890	.3125	.3205	.3971	.6699
.500	.3321	.3122	.3059	.2539	.6362
.950	.3364	.3149	.2831	.2093	.1894

MACH (1) = .230 ALPHA (5) = 18.910

X/L	.050	.250	.500	.750	.950
X/LD					
.050	.4179	.3814	.3864	.4988	.7422
.500	.3848	.3662	.3522	.3248	.7193
.950	.3763	.3804	.4016	.2334	.1837

NAAL 737 OA143 ORB/B65-MAIN GEAR RT SDWALL CPS (RFC136) (14 MAY 75)

REFERENCE DATA

SREF = 2690.0000 SQ.FT. XMRP = 1076.7000 IN.XO
LREF = 474.8000 IN. YMRP = .0000 IN.YO
BREF = 936.6800 IN. ZMRP = 375.0000 IN.ZO
SCALE = .0405

PARAMETRIC DATA

BETA = -4.000 BDFLAP = -11.700
ELEVON = 5.000 RUDDER = .000
SPDBRK = 25.000 GRDPLN = .000
LNGRPS = 1.000 LNDGDR = 100.000

SECTION (1)MN GR RT SWAL CPS DEPENDENT VARIABLE CP

MACH (1) = .230 ALPHA (1) = .000

X/L	.050	.250	.500	.750	.950
X/LD					
.050	-.1016	-.1332	-.1394	-.1720	.0340
.500	-.0948	-.1600	-.1400	-.1619	-.1205
.950	-.0775	-.1176	-.1224	-.0657	-.2466

MACH (1) = .230 ALPHA (2) = 5.260

X/L	.050	.250	.500	.750	.950
X/LD					
.050	.0584	.0438	-.0021	-.0070	.1500
.500	.0581	.0214	-.0002	-.0226	-.0679
.950	.0743	.0302	.0252	.0606	.1009

MACH (1) = .230 ALPHA (3) = 10.490

X/L	.050	.250	.500	.750	.950
X/LD					
.050	.2330	.1788	.1475	.1765	.3025
.500	.2044	.1595	.1445	.1505	.2312
.950	.2495	.1680	.1472	.1508	.1562

MACH (1) = .230 ALPHA (4) = 15.770

X/L	.050	.250	.500	.750	.950
X/LD					
.050	.4035	.3065	.3017	.3296	.5626
.500	.3394	.2978	.2616	.2553	.4141
.950	.3696	.3035	.2693	.2526	.2166

MACH (1) = .230 ALPHA (5) = 18.920

X/L	.050	.250	.500	.750	.950
X/LD					
.050	.4462	.3687	.3829	.4470	.6793
.500	.3902	.3711	.3678	.3250	.6277
.950	.4163	.3737	.3300	.3067	.2713

NAAL 737 OA143 ORB/B65-MAIN GEAR RT SDWALL CPS (RFC137) (14 MAY 75)

REFERENCE DATA

SREF = 2690.0000 SQ.FT. XMRP = 1076.7000 IN.XO
LREF = 474.8000 IN. YMRP = .0000 IN.YO
BREF = 936.6800 IN. ZMRP = 375.0000 IN.ZO
SCALE = .0405

PARAMETRIC DATA

BETA = -8.000 BDFLAP = -11.700
ELEVON = 5.000 RUDDER = .000
SPDBRK = 25.000 GRDPLN = .000
LNGRPS = 1.000 LNDGDR = 100.000

SECTION (1)MN GR RT SWAL CPS DEPENDENT VARIABLE CP

MACH (1) = .230 ALPHA (1) = .030

X/L	.050	.250	.500	.750	.950
X/LD					
.050	-.1706	-.2018	-.2469	-.2743	-.0486
.500	-.1696	-.2201	-.2526	-.2915	-.0801
.950	-.1432	-.1811	-.2102	-.1724	-.1836

MACH (1) = .230 ALPHA (2) = 5.250

X/L	.050	.250	.500	.750	.950
X/LD					
.050	-.0104	-.0212	-.0508	-.0804	.0997
.500	.0007	-.0554	-.0328	-.0752	-.0218
.950	.0095	-.0104	-.0221	.0238	-.1379

MACH (1) = .230 ALPHA (3) = 10.510

X/L	.050	.250	.500	.750	.950
X/LD					
.050	.1630	.1488	.1038	.1044	.2434
.500	.1627	.1342	.1079	.0841	.0477
.950	.1766	.1356	.1246	.1537	.1424

MACH (1) = .230 ALPHA (4) = 15.790

X/L	.050	.250	.500	.750	.950
X/LD					
.050	.3442	.2805	.2522	.2822	.4176
.500	.3065	.2644	.2467	.2500	.3546
.950	.3546	.2708	.2492	.2500	.2740

MACH (1) = .230 ALPHA (5) = 18.950

X/L	.050	.250	.500	.750	.950
X/LD					
.050	.4398	.3567	.3387	.3714	.5609
.500	.3863	.3389	.3145	.3134	.4526
.950	.4274	.3480	.3181	.3123	.3085

NAAL 737 OA143 ORB/B65-MAIN GEAR RT SDWALL CPS (RFC138) (14 MAY 75)

REFERENCE DATA

SREF = 2690.0000 SQ.FT. XMRP = 1076.7000 IN.XO
LREF = 474.8000 IN. YMRP = .0000 IN.YO
BREF = 936.6800 IN. ZMRP = 375.0000 IN.ZO
SCALE = .0405

PARAMETRIC DATA

BETA = 4.000 BDFLAP = -11.700
ELEVON = 5.000 RUDDER = .000
SPDBRK = 25.000 GRDPLN = .000
LNGRPS = 1.000 LNDGDR = 100.000

SECTION (1)MN GR RT SWAL CPS DEPENDENT VARIABLE CP

MACH (1) = .230 ALPHA (1) = .010

X/L	.050	.250	.500	.750	.950
X/LD					
.050	.0207	.0139	-.0248	-.0169	.0832
.500	.0193	-.0029	-.0316	-.0385	-.0232
.950	.0332	-.0087	-.0193	-.0002	.0249

MACH (1) = .230 ALPHA (2) = 5.240

X/L	.050	.250	.500	.750	.950
X/LD					
.050	.1825	.1098	.0923	.1200	.2920
.500	.1434	.0880	.0635	.0684	.2076
.950	.1787	.1003	.0714	.0722	.0294

MACH (1) = .230 ALPHA (3) = 10.090

X/L	.050	.250	.500	.750	.950
X/LD					
.050	.4213	.4172	.4410	.5276	.7309
.500	.3987	.3862	.3720	.3607	.7163
.950	.4105	.3703	.4404	.2506	.0984

MACH (1) = .230 ALPHA (4) = 10.460

X/L	.050	.250	.500	.750	.950
X/LD					
.050	.2561	.2153	.2182	.2952	.4887
.500	.2254	.2072	.2056	.1689	.4570
.950	.2291	.2153	.2191	.1243	.0362

MACH (1) = .230 ALPHA (5) = 15.730

X/L	.050	.250	.500	.750	.950
X/LD					
.050	.3636	.3411	.3508	.4593	.6785
.500	.3374	.3178	.2987	.2910	.6639
.950	.3326	.3219	.3811	.1811	.0651

NAAL 737 OA143 ORB/B65-MAIN GEAR RT SDWALL CPS (RFC139) (14 MAY 75)

REFERENCE DATA

SREF =	2690.0000 SQ.FT.	XMRP =	1076.7000 IN.XO		
LREF =	474.8000 IN.	YMRP =	.0000 IN.YO		
BREF =	936.6800 IN.	ZMRP =	375.0000 IN.ZO		
SCALE =	.0405				

PARAMETRIC DATA

BETA =	8.000	BDFLAP =	-11.700
ELEVON =	5.000	RUDDER =	.000
SPDBRK =	25.000	GRDPLN =	.000
LNGRPS =	1.000	LNDGDR =	100.000

SECTION (1)MN GR RT SWAL CPS DEPENDENT VARIABLE CP

MACH (1) = .230 ALPHA (1) = .020

X/L	.050	.250	.500	.750	.950
X/LD					
.050	.0668	.0170	-.0092	.0167	.1483
.500	.0424	-.0026	-.0191	-.0152	.0801
.950	.0801	.0082	-.0100	-.0073	-.0177

MACH (1) = .230 ALPHA (2) = 5.250

X/L	.050	.250	.500	.750	.950
X/LD					
.050	.1891	.1496	.1561	.2240	.3838
.500	.1584	.1492	.1463	.1211	.3603
.950	.1736	.1414	.1406	.0905	-.0204

MACH (1) = .230 ALPHA (3) = 10.460

X/L	.050	.250	.500	.750	.950
X/LD					
.050	.3016	.2774	.2931	.4199	.6765
.500	.2727	.2528	.2307	.2271	.6523
.950	.2797	.2474	.3085	.1180	.0033

MACH (1) = .230 ALPHA (4) = 15.740

X/L	.050	.250	.500	.750	.950
X/LD					
.050	.3808	.3852	.4107	.5188	.7414
.500	.3508	.3441	.3212	.3221	.7350
.950	.3697	.3185	.4118	.2018	.0473

MACH (1) = .230 ALPHA (5) = 18.890

X/L	.050	.250	.500	.750	.950
X/LD					
.050	.4380	.4625	.5088	.5644	.7633
.500	.3878	.3919	.3760	.3509	.7619
.950	.4232	.4026	.4456	.2775	.0902

NAAL 737 OA143 ORB/B67-MAIN GEAR RT SDWALL CPS (RFC156) (14 MAY 75)

REFERENCE DATA

SREF =	2690.0000 SQ.FT.	XMRP =	1076.7000 IN.XO
LREF =	474.8000 IN.	YMRP =	.0000 IN.YO
BREF =	936.6800 IN.	ZMRP =	375.0000 IN.ZO
SCALE =	.0405		

PARAMETRIC DATA

BETA =	.000	BDFLAP =	-11.700
ELEVON =	5.000	RUDDER =	.000
SPDBRK =	25.000	GRDPLN =	.000
LNGRPS =	1.000	LNDGDR =	100.000

SECTION (1)MN OR RT SWAL CPS DEPENDENT VARIABLE CP

MACH (1) = .230 ALPHA (1) = -4.160

X/L	.050	.250	.500	.750	.950
X/LD					
.050	-.1541	-.1849	-.2109	-.1956	-.0133
.500	-.1500	-.2015	-.2019	-.1975	-.2306
.950	-.1314	-.1730	-.1738	-.1144	-.2377

MACH (1) = .230 ALPHA (2) = -2.080

X/L	.050	.250	.500	.750	.950
X/LD					
.050	-.0960	-.1218	-.1429	-.1511	.0255
.500	-.0885	-.1452	-.1346	-.1492	-.2148
.950	-.0814	-.1163	-.1220	-.0608	-.1503

MACH (1) = .230 ALPHA (3) = .020

X/L	.050	.250	.500	.750	.950
X/LD					
.050	-.0399	-.0556	-.0891	-.1025	.0716
.500	-.0264	-.0759	-.0797	-.1028	-.1610
.950	-.0274	-.0549	-.0668	-.0185	.0316

MACH (1) = .230 ALPHA (4) = 2.110

X/L	.050	.250	.500	.750	.950
X/LD					
.050	.0254	.0129	-.0355	-.0316	.1152
.500	.0261	-.0063	-.0366	-.0502	-.0782
.950	.0353	-.0022	-.0097	.0216	.0890

MACH (1) = .230 ALPHA (5) = 4.200

X/L	.050	.250	.500	.750	.950
X/LD					
.050	.0809	.0704	.0282	.0416	.1427
.500	.0809	.0562	.0230	.0200	.0347
.950	.0948	.0542	.0399	.0596	.0840

MACH (1) = .230 ALPHA (6) = 6.290

X/L	.050	.250	.500	.750	.950
X/LD					
.050	.1561	.1070	.0824	.1076	.2204
.500	.1297	.0921	.0766	.0824	.1442
.950	.1734	.0992	.0807	.0892	.0662

MACH (1) = .230 ALPHA (7) = 8.400

X/L	.050	.250	.500	.750	.950
X/LD					
.050	.2378	.1611	.1425	.1761	.3462
.500	.1857	.1402	.1174	.1179	.2442
.950	.2341	.1523	.1264	.1217	.0909

NAAL 737 OA143 ORB/B67-MAIN GEAR RT SDWALL CPS (RFC156)

SECTION (1)MN GR RT SWAL CPS DEPENDENT VARIABLE CP

MACH (1) = .230 ALPHA (8) = 10.490

X/L	.050	.250	.500	.750	.950
X/LD					
.050	.3048	.2104	.2016	.2311	.4636
.500	.2398	.1946	.1669	.1568	.3214
.950	.2782	.2027	.1743	.1584	.1141

MACH (1) = .230 ALPHA (9) = 12.590

X/L	.050	.250	.500	.750	.950
X/LD					
.050	.3519	.2538	.2665	.2858	.5444
.500	.2929	.2541	.2243	.1979	.4359
.950	.3087	.2622	.2042	.1996	.1682

MACH (1) = .230 ALPHA (10) = 14.700

X/L	.050	.250	.500	.750	.950
X/LD					
.050	.3722	.2875	.3051	.3677	.6321
.500	.3135	.2942	.2869	.2365	.5855
.950	.3266	.2983	.2541	.1973	.1885

MACH (1) = .230 ALPHA (11) = 16.800

X/L	.050	.250	.500	.750	.950
X/LD					
.050	.3922	.3356	.3345	.4345	.7010
.500	.3474	.3255	.3254	.2736	.6721
.950	.3447	.3410	.3303	.2071	.1832

MACH (1) = .230 ALPHA (12) = 18.910

X/L	.050	.250	.500	.750	.950
X/LD					
.050	.4176	.3797	.3821	.4889	.7376
.500	.3837	.3629	.3533	.3220	.7127
.950	.3793	.3790	.3928	.2352	.1740

NAAL 737 OA143 ORB/B67-MAIN GEAR RT SDWALL CPS (RFC160) (14 MAY 75)

REFERENCE DATA

SREF = 2690.0000 SQ.FT. XMRP = 1078.7000 IN.XO
LREF = 474.8000 IN. YMRP = .0000 IN.YO
BREF = 936.6800 IN. ZMRP = 375.0000 IN.ZO
SCALE = .0405

PARAMETRIC DATA

BETA = 8.000 BDFLAP = -11.700
ELEVON = 5.000 RUDDER = .000
SPDBRK = 25.000 GRDPLN = .000
LNGRPS = 1.000 LNDGDR = 100.000

SECTION (1)MN GR RT SWAL CPS DEPENDENT VARIABLE CP

MACH (1) = .230 ALPHA (1) = -4.130

X/L	.050	.250	.500	.750	.950
X/LD					
.050	-.0324	-.0368	-.0834	-.0686	.0389
.500	-.0324	-.0666	-.0851	-.0889	-.0692
.950	-.0148	-.0636	-.0804	-.0591	-.0193

MACH (1) = .230 ALPHA (2) = -2.050

X/L	.050	.250	.500	.750	.950
X/LD					
.050	.0193	-.0199	-.0497	-.0243	.0841
.500	.0017	-.0371	-.0538	-.0527	.0093
.950	.0353	-.0297	-.0500	-.0377	-.0322

MACH (1) = .230 ALPHA (3) = .020

X/L	.050	.250	.500	.750	.950
X/LD					
.050	.0727	.0156	-.0062	.0165	.1517
.500	.0425	-.0029	-.0213	-.0163	.0790
.950	.0801	.0061	-.0139	-.0076	-.0191

MACH (1) = .230 ALPHA (4) = 2.120

X/L	.050	.250	.500	.750	.950
X/LD					
.050	.1214	.0607	.0474	.0666	.2245
.500	.0841	.0434	.0214	.0219	.1444
.950	.1139	.0522	.0263	.0260	-.0289

MACH (1) = .230 ALPHA (5) = 4.180

X/L	.050	.250	.500	.750	.950
X/LD					
.050	.1674	.1168	.1254	.1485	.3033
.500	.1358	.1212	.1059	.0845	.2563
.950	.1453	.1073	.0906	.0801	.0242

MACH (1) = .230 ALPHA (6) = 6.290

X/L	.050	.250	.500	.750	.950
X/LD					
.050	.2183	.1706	.1921	.2751	.4690
.500	.1865	.1658	.1689	.1428	.4300
.950	.1977	.1990	.1855	.0898	-.0252

MACH (1) = .230 ALPHA (7) = 8.380

X/L	.050	.250	.500	.750	.950
X/LD					
.050	.2627	.2155	.2463	.3528	.5813
.500	.2337	.2256	.2024	.1878	.5592
.950	.2435	.2620	.2455	.1124	-.0150

NAAL 737 OA143 ORB/B67-MAIN GEAR RT SDWALL CPS (RFCI60)

SECTION (1)MN GR RT SWAL CPS DEPENDENT VARIABLE CP

MACH (1) = .230 ALPHA (8) = 9.020

X/L	.050	.250	.500	.750	.950
X/LD					
.050	.3937	.4079	.4412	.5277	.7430
.500	.3636	.3562	.3396	.3266	.7419
.950	.3866	.3511	.4193	.2312	.0635

MACH (1) = .230 ALPHA (9) = 10.480

X/L	.050	.250	.500	.750	.950
X/LD					
.050	.3029	.2773	.2905	.4202	.6682
.500	.2708	.2499	.2339	.2251	.6556
.950	.2793	.2503	.3106	.1192	-.0002

MACH (1) = .230 ALPHA (10) = 12.590

X/L	.050	.250	.500	.750	.950
X/LD					
.050	.3305	.3143	.3318	.4615	.7128
.500	.3035	.2853	.2634	.2620	.7004
.950	.3187	.2694	.3602	.1463	.0206

MACH (1) = .230 ALPHA (11) = 14.680

X/L	.050	.250	.500	.750	.950
X/LD					
.050	.3581	.3595	.3845	.4979	.7301
.500	.3345	.3226	.2953	.2983	.7282
.950	.3476	.2976	.3886	.1799	.0417

MACH (1) = .230 ALPHA (12) = 18.890

X/L	.050	.250	.500	.750	.950
X/LD					
.050	.4377	.4617	.5051	.5584	.7658
.500	.3864	.3843	.3755	.3454	.7554
.950	.4215	.3921	.4532	.2750	.0905

NAAL 737 OA143 ORB/B66-NOSE GEAR FRONT WALL CPS (RFCJ01) (14 MAY 75)

REFERENCE DATA

SREF =	2690.0000 SQ.FT.	XMRP =	1076.7000 IN.XO		
LREF =	474.8000 IN.	YMRP =	.0000 IN.YO		
BREF =	936.6800 IN.	ZMRP =	375.0000 INZO		
SCALE =	.0405				

PARAMETRIC DATA

BETA =	.000	BDFLAP =	-11.700
ELEVON =	5.000	RUDDER =	.000
SPDBRK =	25.000	GRDPLN =	1.000
LNGRPS =	1.000	LNDGDR =	100.000

SECTION (1)NS GR FRT WAL CPS DEPENDENT VARIABLE CP

MACH (1) = .200 ALPHA (1) = .010

X/LD	.050	.500	.950
X/LW			
.050	.0307	.0161	.0293
.500	.0138	.0090	.0198
.950	.0232	.0141	.0222

MACH (1) = .200 ALPHA (2) = 5.380

X/LD	.050	.500	.950
X/LW			
.050	.1532	.1539	.1666
.500	.1414	.1472	.1566
.950	.1441	.1431	.1508

MACH (1) = .200 ALPHA (3) = 10.710

X/LD	.050	.500	.950
X/LW			
.050	.2811	.2898	.2948
.500	.2761	.2821	.2918
.950	.2781	.2824	.2938

MACH (1) = .200 ALPHA (4) = 16.140

X/LD	.050	.500	.950
X/LW			
.050	.4088	.4074	.4134
.500	.4081	.4031	.4127
.950	.4078	.4101	.4167

MACH (1) = .200 ALPHA (5) = 19.380

X/LD	.050	.500	.950
X/LW			
.050	.4880	.4834	.4864
.500	.4870	.4765	.4880
.950	.4894	.4847	.4897

NAAL 737 OA143 ORB/B66-NOSE GEAR FRONT WALL CPS (RFCJ02) (14 MAY 75)

REFERENCE DATA

SREF =	2690.0000 SQ.FT.	XMRP =	1076.7000 IN.XO		
LREF =	474.8000 IN.	YMRP =	.0000 IN.YO		
BREF =	936.6800 IN.	ZMRP =	375.0000 INZO		
SCALE =	.0405				

PARAMETRIC DATA

BETA =	-4.000	BDFLAP =	-11.700
ELEVON =	5.000	RUDDER =	.000
SPDBRK =	25.000	GRDPLN =	1.000
LNGRPS =	1.000	LNDGDR =	100.000

SECTION (1)NS GR FRT WAL CPS DEPENDENT VARIABLE CP

MACH (1) = .200 ALPHA (1) = .010

X/LD	.050	.500	.950
X/LW			
.050	.0046	.0056	.0131
.500	.0006	.0013	.0171
.950	.0248	.0289	.0353

MACH (1) = .200 ALPHA (2) = 5.370

X/LD	.050	.500	.950
X/LW			
.050	.1300	.1330	.1414
.500	.1300	.1306	.1448
.950	.1488	.1538	.1609

MACH (1) = .200 ALPHA (3) = 10.760

X/LD	.050	.500	.950
X/LW			
.050	.2676	.2730	.2753
.500	.2629	.2686	.2793
.950	.2810	.2844	.2928

MACH (1) = .200 ALPHA (4) = 18.150

X/LD	.050	.500	.950
X/LW			
.050	.4013	.4036	.4129
.500	.3927	.3986	.4062
.950	.4158	.4115	.4162

MACH (1) = .200 ALPHA (5) = 19.360

X/LD	.050	.500	.950
X/LW			
.050	.4803	.4860	.4876
.500	.4651	.4664	.4790
.950	.4992	.4949	.4889

NAAL 737 OA143 ORB/B66-NOSE GEAR FRONT WALL CPS (RFCJ03) (14 MAY 75)

REFERENCE DATA

SREF =	2690.0000 SQ.FT.	XMRP =	1076.7000 IN.XO
LREF =	474.8000 IN.	YMRP =	.0000 IN.YO
BREF =	936.6800 IN.	ZMRP =	375.0000 INZO
SCALE =	.0405		

PARAMETRIC DATA

BETA =	-8.000	BDFLAP =	-11.700
ELEVON =	5.000	RUDDER =	.000
SPDBRK =	25.000	GRDPLN =	1.000
LNGRPS =	1.000	LNDGDR =	100.000

SECTION (1)NS GR FRT WAL CPS DEPENDENT VARIABLE CP

MACH (1) = .200 ALPHA (1) = .030

X/LD	.050	.500	.950
X/LW			
.050	.0087	.0053	.0127
.500	.0077	-.0070	.0191
.950	.0171	.0114	.0259

MACH (1) = .200 ALPHA (2) = 5.380

X/LD	.050	.500	.950
X/LW			
.050	.1356	.1406	.1423
.500	.0976	.1016	.1228
.950	.1520	.1319	.1362

MACH (1) = .200 ALPHA (3) = 10.760

X/LD	.050	.500	.950
X/LW			
.050	.2649	.2636	.2556
.500	.2218	.2305	.2412
.950	.2756	.2556	.2532

MACH (1) = .200 ALPHA (4) = 16.170

X/LD	.050	.500	.950
X/LW			
.050	.3882	.3802	.3802
.500	.3598	.3675	.3775
.950	.3956	.3769	.3745

MACH (1) = .200 ALPHA (5) = 19.400

X/LD	.050	.500	.950
X/LW			
.050	.4647	.4568	.4591
.500	.4432	.4482	.4581
.950	.4720	.4518	.4498

NAAL 737 OA143 ORB/B66-NOSE GEAR FRONT WALL CPS (RFCJ04) (14 MAY 75)

REFERENCE DATA

SREF = 2690.0000 SQ.FT. XMRP = 1076.7000 IN.XO
LREF = 474.8000 IN. YMRP = .0000 IN.YO
BREF = 936.6800 IN. ZMRP = 375.0000 INZO
SCALE = .0405

PARAMETRIC DATA

BETA = 4.000 BDFLAP = -11.700
ELEVON = 5.000 RUDDER = .000
SPDBRK = 25.000 GRDPLN = 1.000
LNGRPS = 1.000 LNDGDR = 100.000

SECTION (1)NS GR FRT WAL CPS DEPENDENT VARIABLE CP

MACH (1) = .200 ALPHA (1) = .000

X/LD	.050	.500	.950
X/LW			
.050	.0413	.0393	.0453
.500	.0093	.0147	.0268
.950	.0134	.0107	.0231

MACH (1) = .200 ALPHA (2) = 5.340

X/LD	.050	.500	.950
X/LW			
.050	.1618	.1570	.1648
.500	.1318	.1375	.1463
.950	.1362	.1379	.1463

MACH (1) = .200 ALPHA (3) = 10.730

X/LD	.050	.500	.950
X/LW			
.050	.2930	.2877	.2984
.500	.2703	.2703	.2823
.950	.2743	.2733	.2816

MACH (1) = .200 ALPHA (4) = 16.140

X/LD	.050	.500	.950
X/LW			
.050	.4235	.4125	.4221
.500	.4005	.4055	.4121
.950	.4075	.4098	.4131

MACH (1) = .200 ALPHA (5) = 19.370

X/LD	.050	.500	.950
X/LW			
.050	.5005	.4857	.4929
.500	.4695	.4748	.4810
.950	.4810	.4850	.4873

NAAL 737 OA143 ORB/B66-NOSE GEAR FRONT WALL CPS (RFCJ05) (14 MAY 75)

REFERENCE DATA

SREF = 2690.0000 SQ.FT. XMRP = 1076.7000 IN.XO
LREF = 474.8000 IN. YMRP = .0000 IN.YO
BREF = 936.6800 IN. ZMRP = 375.0000 INZO
SCALE = .0405

PARAMETRIC DATA

BETA = 8.000 BDFLAP = -11.700
ELEVON = 5.000 RUDDER = .000
SPDBRK = 25.000 GRDPLN = 1.000
LNGRPS = 1.000 LNDGDR = 100.000

SECTION (1)NS GR FRT WAL CPS DEPENDENT VARIABLE CP

MACH (1) = .200 ALPHA (1) = .030

X/LD	.050	.500	.950
X/LW			
.050	.0372	.0258	.0389
.500	.0053	-.0043	.0227
.950	.0103	.0086	.0167

MACH (1) = .200 ALPHA (2) = 5.360

X/LD	.050	.500	.950
X/LW			
.050	.1707	.1368	.1401
.500	.0877	.0991	.1210
.950	.1408	.1435	.1452

MACH (1) = .200 ALPHA (3) = 10.770

X/LD	.050	.500	.950
X/LW			
.050	.2961	.2597	.2563
.500	.2192	.2363	.2473
.950	.2677	.2647	.2583

MACH (1) = .200 ALPHA (4) = 16.160

X/LD	.050	.500	.950
X/LW			
.050	.4169	.3766	.3746
.500	.3599	.3693	.3832
.950	.3942	.3866	.3829

MACH (1) = .200 ALPHA (5) = 19.390

X/LD	.050	.500	.950
X/LW			
.050	.4864	.4529	.4519
.500	.4453	.4506	.4592
.950	.4665	.4599	.4629

NAAL 737 OA143 ORB/B66-NOSE GEAR FRONT WALL CPS (RFCJ06) (14 MAY 75)

REFERENCE DATA

SREF =	2690.0000 SQ.FT.	XMRP =	1076.7000 IN.XO
LREF =	474.8000 IN.	YMRP =	.0000 IN.YO
BREF =	936.6800 IN.	ZMRP =	375.0000 INZO
SCALE =	.0405		

PARAMETRIC DATA

BETA =	.000	BDFLAP =	-11.700
ELEVON =	10.000	RUDDER =	.000
SPDBRK =	25.000	GRDPLN =	1.000
LNGRPS =	1.000	LNDGDR =	100.000

SECTION (1)NS GR FRT WAL CPS DEPENDENT VARIABLE CP

MACH (1) = .200 ALPHA (1) = .110

X/LD	.050	.500	.950
X/LW			
.050	.0318	.0158	.0267
.500	.0135	.0111	.0219
.950	.0226	.0155	.0250

MACH (1) = .200 ALPHA (2) = 5.470

X/LD	.050	.500	.950
X/LW			
.050	.1559	.1576	.1668
.500	.1424	.1492	.1580
.950	.1438	.1451	.1512

MACH (1) = .200 ALPHA (3) = 10.840

X/LD	.050	.500	.950
X/LW			
.050	.2830	.2906	.2943
.500	.2763	.2796	.2893
.950	.2786	.2823	.2883

MACH (1) = .200 ALPHA (4) = 16.230

X/LD	.050	.500	.950
X/LW			
.050	.4125	.4092	.4152
.500	.4095	.4079	.4135
.950	.4129	.4145	.4175

MACH (1) = .200 ALPHA (5) = 19.450

X/LD	.050	.500	.950
X/LW			
.050	.4912	.4896	.4936
.500	.4909	.4859	.4926
.950	.4926	.4899	.4982

NAAL 737 OA143 ORB/B66-NOSE GEAR FRONT WALL CPS (RFCJ07) (14 MAY 75)

REFERENCE DATA

SREF =	2690.0000 SQ.FT.	XMRP =	1076.7000 IN.XO		
LREF =	474.8000 IN.	YMRP =	.0000 IN.YO		
BREF =	936.6800 IN.	ZMRP =	375.0000 INZO		
SCALE =	.0405				

PARAMETRIC DATA

BETA =	-4.000	BDFLAP =	-11.700
ELEVON =	10.000	RUDDER =	.000
SPDBRK =	25.000	GRDPLN =	1.000
LNGRPS =	1.000	LNDGDR =	100.000

SECTION (1)NS GR FRT WAL CPS DEPENDENT VARIABLE CP

MACH (1) = .200 ALPHA (1) = .130

X/LD	.050	.500	.950
X/LW			
.050	.0040	.0040	.0154
.500	.0013	.0023	.0198
.950	.0248	.0255	.0362

MACH (1) = .200 ALPHA (2) = 5.470

X/LD	.050	.500	.950
X/LW			
.050	.1331	.1341	.1415
.500	.1284	.1295	.1442
.950	.1516	.1533	.1610

MACH (1) = .200 ALPHA (3) = 10.870

X/LD	.050	.500	.950
X/LW			
.050	.2698	.2741	.2785
.500	.2657	.2671	.2839
.950	.2832	.2856	.2966

MACH (1) = .200 ALPHA (4) = 16.240

X/LD	.050	.500	.950
X/LW			
.050	.4011	.4078	.4144
.500	.3921	.3994	.4111
.950	.4164	.4164	.4234

MACH (1) = .200 ALPHA (5) = 19.450

X/LD	.050	.500	.950
X/LW			
.050	.4814	.4853	.4883
.500	.4576	.4662	.4827
.950	.4953	.4887	.4923

NAAL 737 OA143 ORB/B66-NOSE GEAR FRONT WALL CPS (RFCJ08) (14 MAY 75)

REFERENCE DATA

SREF =	2690.0000 SQ.FT.	XMRP =	1076.7000 IN.XO		
LREF =	474.8000 IN.	YMRP =	.0000 IN.YO		
BREF =	936.6000 IN.	ZMRP =	375.0000 INZO		
SCALE =	.0405				

PARAMETRIC DATA

BETA =	-8.000	BDFLAP =	-11.700
ELEVON =	10.000	RUDDER =	.000
SPDBRK =	25.000	GRDPLN =	1.000
LNGRPS =	1.000	LNDGDR =	100.000

SECTION (1)NS GR FRT WAL CPS DEPENDENT VARIABLE CP

MACH (1) = .200 ALPHA (1) = .120

X/LD	.050	.500	.950
X/LW			
.050	.0107	.0067	.0161
.500	.0100	-.0054	.0201
.950	.0195	.0097	.0282

MACH (1) = .200 ALPHA (2) = 5.490

X/LD	.050	.500	.950
X/LW			
.050	.1359	.1429	.1436
.500	.1037	.1047	.1214
.950	.1523	.1272	.1372

MACH (1) = .200 ALPHA (3) = 10.870

X/LD	.050	.500	.950
X/LW			
.050	.2665	.2655	.2558
.500	.2217	.2318	.2411
.950	.2785	.2562	.2538

MACH (1) = .200 ALPHA (4) = 16.230

X/LD	.050	.500	.950
X/LW			
.050	.3876	.3816	.3823
.500	.3593	.3663	.3773
.950	.3963	.3743	.3730

MACH (1) = .200 ALPHA (5) = 19.440

X/LD	.050	.500	.950
X/LW			
.050	.4649	.4616	.4649
.500	.4413	.4516	.4626
.950	.4686	.4490	.4540

NAAL 737 OA143 ORB/B66-NOSE GEAR FRONT WALL CPS (RFCJ09) (14 MAY 75)

REFERENCE DATA

SREF =	2690.0000 SQ.FT.	XMRP =	1076.7000 IN.XO
LREF =	474.8000 IN.	YMRP =	.0000 IN.YO
BREF =	936.6800 IN.	ZMRP =	375.0000 INZO
SCALE =	.0405		

PARAMETRIC DATA

BETA =	4.000	BDFLAP =	-11.700
ELEVON =	10.000	RUDDER =	.000
SPDBRK =	25.000	GRDPLN =	1.000
LNGRPS =	1.000	LNDGDR =	100.000

SECTION (1)NS GR FRT WAL CPS DEPENDENT VARIABLE CP

MACH (1) = .200 ALPHA (1) = .110

X/LD	.050	.500	.950
X/LW			
.050	.0420	.0406	.0460
.500	.0100	.0147	.0278
.950	.0130	.0124	.0225

MACH (1) = .200 ALPHA (2) = 5.450

X/LD	.050	.500	.950
X/LW			
.050	.1628	.1595	.1655
.500	.1329	.1376	.1477
.950	.1366	.1390	.1457

MACH (1) = .200 ALPHA (3) = 10.830

X/LD	.050	.500	.950
X/LW			
.050	.2942	.2862	.2968
.500	.2718	.2692	.2818
.950	.2748	.2762	.2815

MACH (1) = .200 ALPHA (4) = 16.230

X/LD	.050	.500	.950
X/LW			
.050	.4259	.4143	.4229
.500	.4029	.4049	.4129
.950	.4073	.4073	.4109

MACH (1) = .200 ALPHA (5) = 19.440

X/LD	.050	.500	.950
X/LW			
.050	.5050	.4903	.4957
.500	.4704	.4774	.4870
.950	.4834	.4860	.4937

NAAL 737 OA143 ORB/B66-NOSE GEAR FRONT WALL CPS (RFCJ10) (14 MAY 75)

REFERENCE DATA

SREF =	2690.0000 SQ.FT.	XMRP =	1076.7000 IN.XO		
LREF =	474.8000 IN.	YMRP =	.0000 IN.YO		
BREF =	936.6800 IN.	ZMRP =	375.0000 INZO		
SCALE =	.0405				

PARAMETRIC DATA

BETA =	8.000	BDFLAP =	-11.700
ELEVON =	10.000	RUDDER =	.000
SPDBRK =	25.000	GRDPLN =	1.000
LNGRPS =	1.000	LNDGDR =	100.000

SECTION (1)NS GR FRT WAL CPS DEPENDENT VARIABLE CP

MACH (1) = .200 ALPHA (1) = .110

X/LD	.050	.500	.950
X/LW			
.050	.0380	.0283	.0424
.500	.0077	-.0013	.0239
.950	.0134	.0100	.0198

MACH (1) = .200 ALPHA (2) = 5.430

X/LD	.050	.500	.950
X/LW			
.050	.1733	.1393	.1454
.500	.0831	.1033	.1252
.950	.1434	.1477	.1454

MACH (1) = .200 ALPHA (3) = 10.830

X/LD	.050	.500	.950
X/LW			
.050	.3004	.2652	.2598
.500	.2218	.2376	.2484
.950	.2725	.2732	.2625

MACH (1) = .200 ALPHA (4) = 16.230

X/LD	.050	.500	.950
X/LW			
.050	.4216	.3813	.3813
.500	.3647	.3747	.3764
.950	.3996	.3883	.3820

MACH (1) = .200 ALPHA (5) = 19.430

X/LD	.050	.500	.950
X/LW			
.050	.4905	.4570	.4576
.500	.4470	.4530	.4649
.950	.4703	.4643	.4673

NAAL 737 OA143 OR8/B66-NOSE GEAR FRONT WALL CPS (RFCJ11) (14 MAY 75)

REFERENCE DATA

SREF =	2690.0000 SQ.FT.	XMRP =	1076.7000 IN.XO		
LREF =	474.8000 IN.	YMRP =	.0000 IN.YO		
BREF =	936.6800 IN.	ZMRP =	375.0000 INZO		
SCALE =	.0405				

PARAMETRIC DATA

BETA =	.000	BDFLAP =	-11.700
ELEVON =	15.000	RUDDER =	.000
SPDBRK =	25.000	GRDPLN =	1.000
LNGRPS =	1.000	LNDGDR =	100.000

SECTION (1)NS GR FRT WAL CPS DEPENDENT VARIABLE CP

MACH (1) = .200 ALPHA (1) = .190

X/LD	.050	.500	.950
X/LW			
.050	.0317	.0175	.0317
.500	.0124	.0144	.0212
.950	.0205	.0195	.0246

MACH (1) = .200 ALPHA (2) = 5.560

X/LD	.050	.500	.950
X/LW			
.050	.1567	.1543	.1672
.500	.1436	.1479	.1584
.950	.1449	.1476	.1537

MACH (1) = .200 ALPHA (3) = 10.920

X/LD	.050	.500	.950
X/LW			
.050	.2850	.2924	.2974
.500	.2796	.2823	.2944
.950	.2806	.2893	.2930

MACH (1) = .200 ALPHA (4) = 16.300

X/LD	.050	.500	.950
X/LW			
.050	.4102	.4102	.4189
.500	.4116	.4116	.4162
.950	.4129	.4156	.4212

MACH (1) = .200 ALPHA (5) = 19.510

X/LD	.050	.500	.950
X/LW			
.050	.4891	.4884	.4914
.500	.4881	.4828	.4871
.950	.4914	.4911	.4887

NAAL 737 OA143 ORB/B66-NOSE GEAR FRONT WALL CPS (RFCJ12) (14 MAY 75)

REFERENCE DATA

SREF =	2600.0000 SQ.FT.	XMRP =	1076.7000 IN.XO		
LREF =	474.8000 IN.	YMRP =	.0000 IN.YO		
BREF =	936.6800 IN.	ZMRP =	375.0000 INZO		
SCALE =	.0405				

PARAMETRIC DATA

BETA =	-4.000	BDFLAP =	-11.700
ELEVON =	15.000	RUDDER =	.000
SPDBRK =	25.000	GRDPLN =	1.000
LNGRPS =	1.000	LNDGDR =	100.000

SECTION (1)NS GR FRT WAL CPS DEPENDENT VARIABLE CP

MACH (1) = .200 ALPHA (1) = .200

X/LD	.050	.500	.950
X/LW			
.050	.0050	.0067	.0161
.500	.0023	.0036	.0212
.950	.0283	.0313	.0370

MACH (1) = .200 ALPHA (2) = 5.570

X/LD	.050	.500	.950
X/LW			
.050	.1323	.1350	.1424
.500	.1306	.1306	.1478
.950	.1529	.1549	.1640

MACH (1) = .200 ALPHA (3) = 10.970

X/LD	.050	.500	.950
X/LW			
.050	.2650	.2694	.2777
.500	.2627	.2660	.2801
.950	.2858	.2871	.2955

MACH (1) = .200 ALPHA (4) = 16.300

X/LD	.050	.500	.950
X/LW			
.050	.4057	.4104	.4148
.500	.3954	.3997	.4151
.950	.4215	.4205	.4268

MACH (1) = .200 ALPHA (5) = 19.500

X/LD	.050	.500	.950
X/LW			
.050	.4854	.4897	.4897
.500	.4641	.4711	.4857
.950	.4986	.4930	.4946

NAAL 737 OA143 ORB/B66-NOSE GEAR FRONT WALL CPS (RFCJ13) (14 MAY 75)

REFERENCE DATA

SREF =	2690.0000 SQ.FT.	XMRP =	1076.7000 IN.XO		
LREF =	474.8000 IN.	YMRP =	.0000 IN.YO		
BREF =	936.6800 IN.	ZMRP =	375.0000 INZO		
SCALE =	.0405				

PARAMETRIC DATA

BETA =	-8.000	BDFLAP =	-11.700
ELEVON =	15.000	RUDDER =	.000
SPDBRK =	25.000	GRDPLN =	1.000
LNGRPS =	1.000	LNDGDR =	100.000

SECTION (1)NS GR FRT WAL CPS DEPENDENT VARIABLE CP

MACH (1) = .200 ALPHA (1) = .210

X/LD	.050	.500	.950
X/LW			
.050	.0090	.0080	.0164
.500	.0103	-.0050	.0211
.950	.0201	.0150	.0271

MACH (1) = .200 ALPHA (2) = 5.590

X/LD	.050	.500	.950
X/LW			
.050	.1382	.1443	.1446
.500	.1039	.1032	.1231
.950	.1524	.1325	.1413

MACH (1) = .200 ALPHA (3) = 10.970

X/LD	.050	.500	.950
X/LW			
.050	.2674	.2634	.2567
.500	.2223	.2340	.2440
.950	.2781	.2597	.2561

MACH (1) = .200 ALPHA (4) = 16.340

X/LD	.050	.500	.950
X/LW			
.050	.3900	.3826	.3820
.500	.3599	.3713	.3820
.950	.3963	.3726	.3726

MACH (1) = .200 ALPHA (5) = 19.520

X/LD	.050	.500	.950
X/LW			
.050	.4604	.4587	.4630
.500	.4394	.4517	.4604
.950	.4647	.4501	.4524

NAAL 737 OA143 ORB/B66-NOSE GEAR FRONT WALL CPS (RFCJ14) (14 MAY 75)

REFERENCE DATA

SREF =	2690.0000 SQ.FT.	XMRP =	1076.7000 IN.XO		
LREF =	474.8000 IN.	YMRP =	.0000 IN.YO		
BREF =	936.6800 IN.	ZMRP =	375.0000 INZO		
SCALE =	.0405				

PARAMETRIC DATA

BETA =	4.000	BDFLAP =	-11.700
ELEVON =	15.000	RUDDER =	.000
SPDBRK =	25.000	GRDPLN =	1.000
LNGRPS =	1.000	LNDGDR =	100.000

SECTION (1)NS GR FRT WAL CPS DEPENDENT VARIABLE CP

MACH (1) = .200 ALPHA (1) = .170

X/LD	.050	.500	.950
X/LW			
.050	.0451	.0431	.0448
.500	.0114	.0161	.0289
.950	.0148	.0124	.0235

MACH (1) = .200 ALPHA (2) = 5.550

X/LD	.050	.500	.950
X/LW			
.050	.1625	.1594	.1695
.500	.1362	.1379	.1503
.950	.1406	.1389	.1470

MACH (1) = .200 ALPHA (3) = 10.910

X/LD	.050	.500	.950
X/LW			
.050	.2955	.2904	.3015
.500	.2723	.2756	.2857
.950	.2740	.2787	.2834

MACH (1) = .200 ALPHA (4) = 16.300

X/LD	.050	.500	.950
X/LW			
.050	.4234	.4137	.4234
.500	.4031	.4054	.4127
.950	.4064	.4088	.4137

MACH (1) = .200 ALPHA (5) = 19.500

X/LD	.050	.500	.950
X/LW			
.050	.5074	.4931	.4958
.500	.4738	.4795	.4921
.950	.4881	.4905	.4958

NAAL 737 OA143 ORB/B66-NOSE GEAR FRONT WALL CPS (RFCJ15) (14 MAY 75)

REFERENCE DATA

SREF =	2690.0000 SQ.FT.	XMRP =	1076.7000 IN.XO		
LREF =	474.8000 IN.	YMRP =	.0000 IN.YO		
BREF =	936.6800 IN.	ZMRP =	375.0000 INZO		
SCALE =	.0405				

PARAMETRIC DATA

BETA =	8.000	BDFLAP =	-11.700
ELEVON =	15.000	RUDDER =	.000
SPDBRK =	25.000	GRDPLN =	1.000
LNGRPS =	1.000	LNDGDR =	100.000

SECTION (1)NS GR FRT WAL CPS DEPENDENT VARIABLE CP

MACH (1) = .200 ALPHA (1) = .200

X/LD	.050	.500	.950
X/LW			
.050	.0447	.0285	.0430
.500	.0063	-.0020	.0241
.950	.0137	.0097	.0198

MACH (1) = .200 ALPHA (2) = 5.550

X/LD	.050	.500	.950
X/LW			
.050	.1748	.1414	.1414
.500	.0804	.1020	.1259
.950	.1438	.1495	.1485

MACH (1) = .200 ALPHA (3) = 10.930

X/LD	.050	.500	.950
X/LW			
.050	.3006	.2661	.2581
.500	.2247	.2364	.2478
.950	.2722	.2665	.2601

MACH (1) = .200 ALPHA (4) = 16.300

X/LD	.050	.500	.950
X/LW			
.050	.4231	.3830	.3824
.500	.3694	.3774	.3860
.950	.3984	.3904	.3884

MACH (1) = .200 ALPHA (5) = 19.510

X/LD	.050	.500	.950
X/LW			
.050	.4913	.4579	.4569
.500	.4516	.4539	.4615
.950	.4735	.4682	.4649

NAAL 737 OA143 ORB/B66-NOSE GEAR FRONT WALL CPS (RFCJ16) (14 MAY 75)

REFERENCE DATA

SREF =	2690.0000 SQ.FT.	XMRP =	1076.7000 IN.XO		
LREF =	474.8000 IN.	YMRP =	.0000 IN.YO		
BREF =	936.6800 IN.	ZMRP =	375.0000 INZO		
SCALE =	.0405				

PARAMETRIC DATA

BETA =	.000	BDFLAP =	-11.700
ELEVON =	15.000	RUDDER =	.000
SPDBRK =	25.000	GRDPLN =	.000
LNGRPS =	1.000	LNDGDR =	100.000

SECTION (1)NS GR FRT WAL CPS DEPENDENT VARIABLE CP

MACH (1) = .230 ALPHA (1) = .120

X/LD	.050	.500	.950
X/LW			
.050	-.0113	-.0323	-.0130
.500	-.0246	-.0273	-.0232
.950	-.0132	-.0265	-.0168

MACH (1) = .230 ALPHA (2) = 5.370

X/LD	.050	.500	.950
X/LW			
.050	.1250	.1253	.1348
.500	.1087	.1138	.1226
.950	.1114	.1122	.1198

MACH (1) = .230 ALPHA (3) = 10.620

X/LD	.050	.500	.950
X/LW			
.050	.2551	.2602	.2648
.500	.2486	.2521	.2632
.950	.2510	.2575	.2651

MACH (1) = .230 ALPHA (4) = 15.880

X/LD	.050	.500	.950
X/LW			
.050	.3887	.3892	.3968
.500	.3900	.3887	.3971
.950	.3900	.3914	.4012

MACH (1) = .230 ALPHA (5) = 19.030

X/LD	.050	.500	.950
X/LW			
.050	.4658	.4674	.4745
.500	.4642	.4655	.4729
.950	.4647	.4669	.4742

NAAL 737 OA143 ORB/B66-NOSE GEAR FRONT WALL CPS (RFCJ17) (14 MAY 75)

REFERENCE DATA

SREF =	2690.0000 SQ.FT.	XMRP =	1076.7000 IN.XO		
LREF =	474.8000 IN.	YMRP =	.0000 IN.YO		
BREF =	936.6800 IN.	ZMRP =	375.0000 INZO		
SCALE =	.0405				

PARAMETRIC DATA

BETA =	-4.000	BDFLAP =	-11.700
ELEVON =	15.000	RUDDER =	.000
SPDBRK =	25.000	GRDPLN =	.000
LNGRPS =	1.000	LNDGDR =	100.000

SECTION (1)NS GR FRT WAL CPS DEPENDENT VARIABLE CP

MACH (1) = .230 ALPHA (1) = .130

X/LD	.050	.500	.950
X/LW			
.050	-.0327	-.0366	-.0258
.500	-.0374	-.0404	-.0184
.950	-.0126	-.0137	-.0008

MACH (1) = .230 ALPHA (2) = 5.410

X/LD	.050	.500	.950
X/LW			
.050	.1022	.1025	.1110
.500	.0973	.0992	.1151
.950	.1153	.1205	.1318

MACH (1) = .230 ALPHA (3) = 10.640

X/LD	.050	.500	.950
X/LW			
.050	.2405	.2481	.2538
.500	.2364	.2405	.2511
.950	.2606	.2609	.2688

MACH (1) = .230 ALPHA (4) = 15.910

X/LD	.050	.500	.950
X/LW			
.050	.3849	.3909	.3985
.500	.3691	.3759	.3887
.950	.4018	.3953	.4021

MACH (1) = .230 ALPHA (5) = 19.060

X/LD	.050	.500	.950
X/LW			
.050	.4654	.4706	.4703
.500	.4440	.4486	.4597
.950	.4822	.4719	.4752

NAAL 737 OA143 ORB/B66-NOSE GEAR FRONT WALL CPS (RFCJ18) (14 MAY 75)

REFERENCE DATA

SREF = 2690.0000 SQ.FT. XMRP = 1076.7000 IN.XO
LREF = 474.8000 IN. YMRP = .0000 IN.YO
BREF = 936.6800 IN. ZMRP = 375.0000 INZO
SCALE = .0405

PARAMETRIC DATA

BETA = -8.000 BDFLAP = -11.700
ELEVON = 15.000 RUDDER = .000
SPDBRK = 25.000 GRDPLN = .000
LNGRPS = 1.000 LNDGDR = 100.000

SECTION (1)NS GR FRT WAL CPS DEPENDENT VARIABLE CP

MACH (1) = .230 ALPHA (1) = .140

X/LD	.050	.500	.950
X/LW			
.050	-.0289	-.0322	-.0258
.500	-.0267	-.0418	-.0146
.950	-.0223	-.0289	-.0132

MACH (1) = .230 ALPHA (2) = 5.420

X/LD	.050	.500	.950
X/LW			
.050	.1077	.1167	.1145
.500	.0713	.0817	.0986
.950	.1211	.1025	.1088

MACH (1) = .230 ALPHA (3) = 10.650

X/LD	.050	.500	.950
X/LW			
.050	.2396	.2409	.2325
.500	.1933	.2080	.2175
.950	.2523	.2314	.2300

MACH (1) = .230 ALPHA (4) = 15.920

X/LD	.050	.500	.950
X/LW			
.050	.3679	.3587	.3598
.500	.3377	.3456	.3535
.950	.3750	.3497	.3516

MACH (1) = .230 ALPHA (5) = 19.070

X/LD	.050	.500	.950
X/LW			
.050	.4436	.4420	.4423
.500	.4211	.4298	.4390
.950	.4507	.4284	.4311

NAAL 737 OA143 ORB/B66-NOSE GEAR FRONT WALL CPS (RFCJ19) (14 MAY 75)

REFERENCE DATA

SREF =	2690.0000 SQ.FT.	XMRP =	1076.7000 IN.XO		
LREF =	474.8000 IN.	YMRP =	.0000 IN.YO		
BREF =	936.6800 IN.	ZMRP =	375.0000 INZO		
SCALE =	.0405				

PARAMETRIC DATA

BETA =	4.000	BDFLAP =	-11.700
ELEVON =	15.000	RUDDER =	.000
SPDBRK =	25.000	GRDPLN =	.000
LNGRPS =	1.000	LNDGDR =	100.000

SECTION (1)NS GR FRT WAL CPS DEPENDENT VARIABLE CP

MACH (1) = .230 ALPHA (1) = .150

X/LD	.050	.500	.950
X/LW			
.050	.0048	.0007	.0054
.500	-.0309	-.0252	-.0123
.950	-.0241	-.0301	-.0170

MACH (1) = .230 ALPHA (2) = 5.360

X/LD	.050	.500	.950
X/LW			
.050	.1314	.1292	.1346
.500	.1012	.1056	.1188
.950	.1089	.1075	.1147

MACH (1) = .230 ALPHA (3) = 10.620

X/LD	.050	.500	.950
X/LW			
.050	.2679	.2639	.2756
.500	.2470	.2489	.2611
.950	.2465	.2508	.2582

MACH (1) = .230 ALPHA (4) = 15.860

X/LD	.050	.500	.950
X/LW			
.050	.4054	.3965	.4033
.500	.3810	.3856	.3935
.950	.3854	.3894	.3921

MACH (1) = .230 ALPHA (5) = 19.040

X/LD	.050	.500	.950
X/LW			
.050	.4857	.4730	.4817
.500	.4546	.4614	.4682
.950	.4614	.4665	.4736

NAAL 737 OA143 ORB/B66-NOSE GEAR FRONT WALL CPS (RFCJ20) (14 MAY 75)

REFERENCE DATA

SREF =	2690.0000 SQ.FT.	XMRP =	1076.7000 IN.XO		
LREF =	474.8000 IN.	YMRP =	.0000 IN.YO		
BREF =	936.6800 IN.	ZMRP =	375.0000 INZO		
SCALE =	.0405				

PARAMETRIC DATA

BETA =	8.000	BDFLAP =	-11.700
ELEVON =	15.000	RUDDER =	.000
SPDBRK =	25.000	GRDPLN =	.000
LNGRPS =	1.000	LNDGDR =	100.000

SECTION (1)NS GR FRT WAL CPS DEPENDENT VARIABLE CP

MACH (1) = .230 ALPHA (1) = .130

X/LD	.050	.500	.950
X/LW			
.050	-.0016	-.0123	.0013
.500	-.0330	-.0387	-.0158
.950	-.0267	-.0311	-.0202

MACH (1) = .230 ALPHA (2) = 5.350

X/LD	.050	.500	.950
X/LW			
.050	.1445	.1187	.1245
.500	.0784	.0773	.0943
.950	.1116	.1193	.1193

MACH (1) = .230 ALPHA (3) = 10.610

X/LD	.050	.500	.950
X/LW			
.050	.2783	.2364	.2345
.500	.1963	.2131	.2242
.950	.2483	.2469	.2391

MACH (1) = .230 ALPHA (4) = 15.840

X/LD	.050	.500	.950
X/LW			
.050	.4061	.3623	.3650
.500	.3446	.3536	.3628
.950	.3786	.3691	.3672

MACH (1) = .230 ALPHA (5) = 19.010

X/LD	.050	.500	.950
X/LW			
.050	.4787	.4436	.4420
.500	.4346	.4387	.4471
.950	.4580	.4520	.4509

NAAL 737 OA143 ORB/B66-NOSE GEAR FRONT WALL CPS (RFCJ21) (14 MAY 75)

REFERENCE DATA

SREF =	2690.0000 SQ.FT.	XMRP =	1076.7000 IN.XO		
LREF =	474.8000 IN.	YMRP =	.0000 IN.YO		
BREF =	936.6800 IN.	ZMRP =	375.0000 INZO		
SCALE =	.0405				

PARAMETRIC DATA

BETA =	.000	BDFLAP =	-11.700
ELEVON =	10.000	RUDDER =	.000
SPDBRK =	25.000	GRDPLN =	.000
LNGRPS =	1.000	LNDGDR =	100.000

SECTION (1)NS GR FRT WAL CPS DEPENDENT VARIABLE CP

MACH (1) = .230 ALPHA (1) = .080

X/LD	.050	.500	.950
X/LW			
.050	-.0093	-.0296	-.0203
.500	-.0263	-.0331	-.0260
.950	-.0211	-.0309	-.0197

MACH (1) = .230 ALPHA (2) = 5.340

X/LD	.050	.500	.950
X/LW			
.050	.1238	.1203	.1334
.500	.1074	.1126	.1216
.950	.1101	.1109	.1183

MACH (1) = .230 ALPHA (3) = 10.550

X/LD	.050	.500	.950
X/LW			
.050	.2534	.2588	.2650
.500	.2477	.2509	.2599
.950	.2493	.2542	.2604

MACH (1) = .230 ALPHA (4) = 15.810

X/LD	.050	.500	.950
X/LW			
.050	.3878	.3919	.3916
.500	.3900	.3867	.3908
.950	.3910	.3886	.3951

MACH (1) = .230 ALPHA (5) = 18.980

X/LD	.050	.500	.950
X/LW			
.050	.4695	.4679	.4763
.500	.4690	.4676	.4657
.950	.4712	.4717	.4742

NAAL 737 OA143 ORB/B66-NOSE GEAR FRONT WALL CPS (RFCJ22) (14 MAY 75)

REFERENCE DATA

SREF =	2690.0000 SQ.FT.	XMRP =	1076.7000 IN.XO		
LREF =	474.8000 IN.	YMRP =	.0000 IN.YO		
BREF =	936.6800 IN.	ZMRP =	375.0000 INZO		
SCALE =	.0405				

PARAMETRIC DATA

BETA =	-4.000	BDFLAP =	-11.700
ELEVON =	10.000	RUDDER =	.000
SPDBRK =	25.000	GRDPLN =	.000
LNGRPS =	1.000	LNDGDR =	100.000

SECTION (1)NS GR FRT WAL CPS DEPENDENT VARIABLE CP

MACH (1) = .230 ALPHA (1) = .090

X/LD	.050	.500	.950
X/LW			
.050	-.0333	-.0391	-.0278
.500	-.0388	-.0413	-.0209
.950	-.0129	-.0129	-.0030

MACH (1) = .230 ALPHA (2) = 5.300

X/LD	.050	.500	.950
X/LW			
.050	.0985	.1001	.1086
.500	.0960	.0985	.1130
.950	.1180	.1207	.1298

MACH (1) = .230 ALPHA (3) = 10.570

X/LD	.050	.500	.950
X/LW			
.050	.2397	.2440	.2494
.500	.2359	.2372	.2518
.950	.2572	.2551	.2648

MACH (1) = .230 ALPHA (4) = 15.810

X/LD	.050	.500	.950
X/LW			
.050	.3775	.3932	.3932
.500	.3672	.3724	.3886
.950	.3973	.3924	.3952

MACH (1) = .230 ALPHA (5) = 18.980

X/LD	.050	.500	.950
X/LW			
.050	.4617	.4669	.4709
.500	.4408	.4468	.4609
.950	.4774	.4706	.4744

NAAL 737 OA143 ORB/866-NOSE GEAR FRONT WALL CPS (RFCJ23) (14 MAY 75)

REFERENCE DATA

SREF =	2690.0000 SQ.FT.	XMRP =	1076.7000 IN.XO		
LREF =	474.8000 IN.	YMRP =	.0000 IN.YO		
BREF =	936.6800 IN.	ZMRP =	375.0000 INZO		
SCALE =	.0405				

PARAMETRIC DATA

BETA =	-8.000	BDFLAP =	-11.700
ELEVON =	10.000	RUDDER =	.000
SPDBRK =	25.000	GRDPLN =	.000
LNGRPS =	1.000	LNDGDR =	100.000

SECTION (1)NS GR FRT WAL CPS DEPENDENT VARIABLE CP

MACH (1) = .230 ALPHA (1) = .100

X/LD	.050	.500	.950
X/LW			
.050	-.0341	-.0363	-.0272
.500	-.0294	-.0435	-.0165
.950	-.0195	-.0319	-.0127

MACH (1) = .230 ALPHA (2) = 5.320

X/LD	.050	.500	.950
X/LW			
.050	.1052	.1134	.1156
.500	.0675	.0722	.0933
.950	.1206	.1008	.1104

MACH (1) = .230 ALPHA (3) = 10.590

X/LD	.050	.500	.950
X/LW			
.050	.2408	.2411	.2319
.500	.1938	.2044	.2191
.950	.2528	.2329	.2305

MACH (1) = .230 ALPHA (4) = 15.850

X/LD	.050	.500	.950
X/LW			
.050	.3661	.3580	.3577
.500	.3365	.3427	.3569
.950	.3721	.3471	.3490

MACH (1) = .230 ALPHA (5) = 19.010

X/LD	.050	.500	.950
X/LW			
.050	.4429	.4377	.4420
.500	.4209	.4271	.4401
.950	.4502	.4290	.4301

NAAL 737 OA143 ORB/B66-NOSE GEAR FRONT WALL CPS (RFCJ24) (14 MAY 75)

REFERENCE DATA

SREF = 2690.0000 SQ.FT. XMRP = 1076.7000 IN.XO
LREF = 474.8000 IN. YMRP = .0000 IN.YO
BREF = 936.6800 IN. ZMRP = 375.0000 INZO
SCALE = .0405

PARAMETRIC DATA

BETA = 4.000 BDFLAP = -11.700
ELEVON = 10.000 RUDDER = .000
SPDBRK = 25.000 GRDPLN = .000
LNGRPS = 1.000 LNDGDR = 100.000

SECTION (1)NS OR FRT WAL CPS DEPENDENT VARIABLE CP

MACH (1) = .230 ALPHA (1) = .070

X/LD	.050	.500	.950
X/LW			
.050	.0035	.0000	.0000
.500	-.0344	-.0292	-.0158
.950	-.0275	-.0344	-.0196

MACH (1) = .230 ALPHA (2) = 5.290

X/LD	.050	.500	.950
X/LW			
.050	.1287	.1282	.1339
.500	.1013	.1049	.1158
.950	.1076	.1065	.1139

MACH (1) = .230 ALPHA (3) = 10.530

X/LD	.050	.500	.950
X/LW			
.050	.2645	.2599	.2710
.500	.2447	.2474	.2571
.950	.2458	.2485	.2536

MACH (1) = .230 ALPHA (4) = 15.790

X/LD	.050	.500	.950
X/LW			
.050	.4043	.3943	.4024
.500	.3834	.3832	.3913
.950	.3840	.3891	.3924

MACH (1) = .230 ALPHA (5) = 18.950

X/LD	.050	.500	.950
X/LW			
.050	.4793	.4675	.4731
.500	.4486	.4572	.4675
.950	.4634	.4666	.4707

NAAL 737 OA143 ORB/B66-NOSE GEAR FRONT WALL CPS (RFCJ25) (14 MAY 75)

REFERENCE DATA

SREF =	2690.0000 SQ.FT.	XMRP =	1076.7000 IN.XO		
LREF =	474.8000 IN.	YMRP =	.0000 IN.YO		
BREF =	936.6800 IN.	ZMRP =	375.0000 INZO		
SCALE =	.0405				

PARAMETRIC DATA

BETA =	8.000	BDFLAP =	-11.700
ELEVON =	10.000	RUDDER =	.000
SPDBRK =	25.000	GRDPLN =	.000
LNGRPS =	1.000	LNDGDR =	100.000

SECTION (1)NS GR FRT WAL CPS DEPENDENT VARIABLE CP

MACH (1) = .230 ALPHA (1) = .100

X/LD	.050	.500	.950
X/LW			
.050	.0010	-.0112	.0029
.500	-.0301	-.0400	-.0129
.950	-.0290	-.0356	-.0222

MACH (1) = .230 ALPHA (2) = 5.310

X/LD	.050	.500	.950
X/LW			
.050	.1386	.1163	.1075
.500	.0602	.0723	.0962
.950	.1083	.1168	.1185

MACH (1) = .230 ALPHA (3) = 10.550

X/LD	.050	.500	.950
X/LW			
.050	.2748	.2367	.2356
.500	.1980	.2119	.2244
.950	.2473	.2451	.2383

MACH (1) = .230 ALPHA (4) = 15.830

X/LD	.050	.500	.950
X/LW			
.050	.4044	.3618	.3607
.500	.3422	.3525	.3609
.950	.3778	.3672	.3650

MACH (1) = .230 ALPHA (5) = 18.970

X/LD	.050	.500	.950
X/LW			
.050	.4730	.4362	.4394
.500	.4283	.4362	.4435
.950	.4513	.4435	.4448

NAAL 737 OA143 ORB/B66-NOSE GEAR FRONT WALL CPS (RFCJ26) (14 MAY 75)

REFERENCE DATA

SREF =	2690.0000 SQ.FT.	XMRP =	1076.7000 IN.XO		
LREF =	474.8000 IN.	YMRP =	.0000 IN.YO		
BREF =	936.6800 IN.	ZMRP =	375.0000 INZO		
SCALE =	.0405				

PARAMETRIC DATA

BETA =	8.000	BDFLAP =	-11.700
ELEVON =	10.000	RUDDER =	.000
SPDBRK =	25.000	GRDPLN =	.000
LNGRPS =	.000	LNDGDR =	.000

SECTION (1)NS GR FRT WAL CPS DEPENDENT VARIABLE CP

MACH (1) = .230 ALPHA (1) = .070

X/LD	.050	.500	.950
X/LW			
.050	-.1540	-.1507	-.1520
.500	-.1515	-.1487	-.1584
.950	-.1424	-.1471	-.1485

MACH (1) = .230 ALPHA (2) = 5.330

X/LD	.050	.500	.950
X/LW			
.050	-.0357	-.0346	-.0437
.500	-.0385	-.0365	-.0530
.950	-.0244	-.0338	-.0330

MACH (1) = .230 ALPHA (3) = 10.570

X/LD	.050	.500	.950
X/LW			
.050	.0886	.0875	.0831
.500	.0880	.0858	.0666
.950	.0968	.0866	.0855

MACH (1) = .230 ALPHA (4) = 15.850

X/LD	.050	.500	.950
X/LW			
.050	.2126	.2090	.2088
.500	.2280	.2107	.1852
.950	.2245	.2131	.2061

MACH (1) = .230 ALPHA (5) = 19.010

X/LD	.050	.500	.950
X/LW			
.050	.2857	.2835	.2849
.500	.3054	.2862	.2616
.950	.2935	.2846	.2838

NAAL 737 OA143 ORB/B66-NOSE GEAR FRONT WALL CPS (RFCJ27) (14 MAY 75)

REFERENCE DATA

SREF = 2690.0000 SQ.FT. XMRP = 1076.7000 IN.XO
LREF = 474.8000 IN. YMRP = .0000 IN.YO
BREF = 936.6800 IN. ZMRP = 375.0000 INZO
SCALE = .0405

PARAMETRIC DATA

BETA = 8.000 BDFLAP = -11.700
ELEVON = 10.000 RUDDER = .000
SPDBRK = 25.000 GRDPLN = .000
LNGRPS = .000 LNDGDR = 40.000

SECTION (1)NS GR FRT WAL CPS DEPENDENT VARIABLE CP

MACH (1) = .230 ALPHA (1) = .080

X/LD	.050	.500	.950
X/LW			
.050	-.1206	-.1226	-.1401
.500	-.1574	-.1681	-.1631
.950	-.1475	-.1481	-.1305

MACH (1) = .230 ALPHA (2) = 5.320

X/LD	.050	.500	.950
X/LW			
.050	.0035	-.0027	-.0214
.500	-.0437	-.0484	-.0410
.950	-.0223	-.0245	-.0190

MACH (1) = .230 ALPHA (3) = 10.550

X/LD	.050	.500	.950
X/LW			
.050	.1457	.1289	.1105
.500	.0902	.0880	.0927
.950	.1141	.1136	.1119

MACH (1) = .230 ALPHA (4) = 15.820

X/LD	.050	.500	.950
X/LW			
.050	.2841	.2665	.2500
.500	.2323	.2275	.2329
.950	.2535	.2527	.2462

MACH (1) = .230 ALPHA (5) = 18.970

X/LD	.050	.500	.950
X/LW			
.050	.3535	.3414	.3011
.500	.3076	.3005	.3084
.950	.3246	.3195	.3197

NAAL 737 OA143 ORB/B66-NOSE GEAR FRONT WALL CPS (RFCJ29) (14 MAY 75)

REFERENCE DATA

SREF = 2690.0000 SQ.FT. XMRP = 1076.7000 IN.XO
LREF = 474.8000 IN. YMRP = .0000 IN.YO
BREF = 936.6800 IN. ZMRP = 375.0000 INZO
SCALE = .0405

PARAMETRIC DATA

BETA = 8.000 BDFLAP = -11.700
ELEVON = 10.000 RUDDER = .000
SPDBRK = 25.000 GRDPLN = .000
LNGRPS = .000 LNDGDR = 80.000

SECTION (1)NS GR FRT WAL CPS DEPENDENT VARIABLE CP

MACH (1) = .230 ALPHA (1) = .090

X/LD	.050	.500	.950
X/LW			
.050	-.0537	-.0677	-.0844
.500	-.1003	-.1228	-.1107
.950	-.0869	-.0965	-.0671

MACH (1) = .230 ALPHA (2) = 5.330

X/LD	.050	.500	.950
X/LW			
.050	.0818	.0761	.0572
.500	.0284	.0229	.0309
.950	.0487	.0440	.0678

MACH (1) = .230 ALPHA (3) = 10.560

X/LD	.050	.500	.950
X/LW			
.050	.2299	.2133	.1923
.500	.1611	.1578	.1677
.950	.1964	.1934	.1901

MACH (1) = .230 ALPHA (4) = 15.810

X/LD	.050	.500	.950
X/LW			
.050	.3695	.3486	.3326
.500	.3030	.3000	.3117
.950	.3331	.3288	.3282

MACH (1) = .230 ALPHA (5) = 18.970

X/LD	.050	.500	.950
X/LW			
.050	.4461	.4253	.4101
.500	.3833	.3833	.3954
.950	.4095	.4098	.4071

NAAL 737 OA143 ORB/B66-NOSE GEAR FRONT WALL CPS (RFCJ30) (14 MAY 75)

REFERENCE DATA

SREF =	2690.0000 SQ.FT.	XMRP =	1076.7000 IN.XO		
LREF =	474.8000 IN.	YMRP =	.0000 IN.YO		
BREF =	936.6800 IN.	ZMRP =	375.0000 INZO		
SCALE =	.0405				

PARAMETRIC DATA

BETA =	.000	BDFLAP =	-11.700
ELEVON =	5.000	RUDDER =	.000
SPDBRK =	25.000	GRDPLN =	.000
LNGRPS =	1.000	LNDGDR =	100.000

SECTION (1)NS GR FRT WAL CPS DEPENDENT VARIABLE CP

MACH (1) = .230 ALPHA (1) = .010

X/LD	.050	.500	.950
X/LW			
.050	-.0189	-.0403	-.0272
.500	-.0332	-.0376	-.0332
.950	-.0239	-.0332	-.0263

MACH (1) = .230 ALPHA (2) = 5.240

X/LD	.050	.500	.950
X/LW			
.050	.1231	.1163	.1267
.500	.1013	.1067	.1177
.950	.1051	.1026	.1092

MACH (1) = .230 ALPHA (3) = 10.470

X/LD	.050	.500	.950
X/LW			
.050	.2515	.2591	.2645
.500	.2461	.2531	.2610
.950	.2452	.2466	.2580

MACH (1) = .230 ALPHA (4) = 15.730

X/LD	.050	.500	.950
X/LW			
.050	.3918	.3931	.3967
.500	.3871	.3888	.3934
.950	.3868	.3915	.3950

MACH (1) = .230 ALPHA (5) = 18.890

X/LD	.050	.500	.950
X/LW			
.050	.4665	.4703	.4711
.500	.4643	.4643	.4722
.950	.4673	.4681	.4752

NAAL 737 OA143 ORB/B66-NOSE GEAR FRONT WALL CPS (RFCJ31) (14 MAY 75)

REFERENCE DATA

SREF =	2690.0000 SQ.FT.	XMRP =	1076.7000 IN.XO
LREF =	474.8000 IN.	YMRP =	.0000 IN.YO
BREF =	936.6800 IN.	ZMRP =	375.0000 INZO
SCALE =	.0405		

PARAMETRIC DATA

BETA =	-4.000	BDFLAP =	-11.700
ELEVON =	5.000	RUDDER =	.000
SPDBRK =	25.000	GRDPLN =	.000
LNGRPS =	1.000	LNDGDR =	100.000

SECTION (1)NS GR FRT WAL CPS DEPENDENT VARIABLE CP

MACH (1) = .230 ALPHA (1) = .000

X/LD	.050	.500	.950
X/LW			
.050	-.0414	-.0458	-.0332
.500	-.0472	-.0505	-.0310
.950	-.0200	-.0230	-.0121

MACH (1) = .230 ALPHA (2) = 5.250

X/LD	.050	.500	.950
X/LW			
.050	.0986	.0970	.1058
.500	.0909	.0929	.1077
.950	.1140	.1153	.1271

MACH (1) = .230 ALPHA (3) = 10.480

X/LD	.050	.500	.950
X/LW			
.050	.2388	.2409	.2475
.500	.2355	.2377	.2469
.950	.2537	.2521	.2613

MACH (1) = .230 ALPHA (4) = 15.760

X/LD	.050	.500	.950
X/LW			
.050	.3784	.3819	.3912
.500	.3705	.3768	.3882
.950	.3950	.3931	.3993

MACH (1) = .230 ALPHA (5) = 18.910

X/LD	.050	.500	.950
X/LW			
.050	.4595	.4649	.4698
.500	.4402	.4497	.4603
.950	.4766	.4704	.4739

NAAL 737 OA143 ORB/B66-NOSE GEAR FRONT WALL CPS (RFCJ32) (14 MAY 75)

REFERENCE DATA

SREF =	2690.0000 SQ.FT.	XMRP =	1076.7000 IN.XO		
LREF =	474.8000 IN.	YMRP =	.0000 IN.YO		
BREF =	936.6800 IN.	ZMRP =	375.0000 INZO		
SCALE =	.0405				

PARAMETRIC DATA

BETA =	-8.000	BDFLAP =	-11.700
ELEVON =	5.000	RUDDER =	.000
SPDBRK =	25.000	GRDPLN =	.000
LNGRPS =	1.000	LNDGDR =	100.000

SECTION (1)NS GR FRT WAL CPS DEPENDENT VARIABLE CP

MACH (1) = .230 ALPHA (1) = .050

X/LD	.050	.500	.950
X/LW			
.050	-.0324	-.0368	-.0293
.500	-.0307	-.0450	-.0225
.950	-.0252	-.0282	-.0140

MACH (1) = .230 ALPHA (2) = 5.250

X/LD	.050	.500	.950
X/LW			
.050	.1026	.1100	.1128
.500	.0672	.0655	.0925
.950	.1188	.0960	.1045

MACH (1) = .230 ALPHA (3) = 10.520

X/LD	.050	.500	.950
X/LW			
.050	.2392	.2392	.2292
.500	.1953	.2037	.2178
.950	.2479	.2311	.2297

MACH (1) = .230 ALPHA (4) = 15.790

X/LD	.050	.500	.950
X/LW			
.050	.3678	.3577	.3613
.500	.3357	.3457	.3545
.950	.3722	.3493	.3474

MACH (1) = .230 ALPHA (5) = 18.960

X/LD	.050	.500	.950
X/LW			
.050	.4403	.4367	.4386
.500	.4200	.4273	.4386
.950	.4486	.4267	.4270

NAAL 737 OA143 ORB/B66-NOSE GEAR FRONT WALL CPS (RFCJ33) (14 MAY 75)

REFERENCE DATA

SREF =	2690.0000 SQ.FT.	XMRP =	1076.7000 IN.XO
LREF =	474.8000 IN.	YMRP =	.0000 IN.YO
BREF =	936.6800 IN.	ZMRP =	375.0000 INZO
SCALE =	.0405		

PARAMETRIC DATA

BETA =	4.000	BDFLAP =	-11.700
ELEVON =	5.000	RUDDER =	.000
SPDBRK =	25.000	GRDPLN =	.000
LNGRPS =	1.000	LNDGDR =	100.000

SECTION (1)NS GR FRT WAL CPS DEPENDENT VARIABLE CP

MACH (1) = .230 ALPHA (1) = .010

X/LD	.050	.500	.950
X/LW			
.050	.0021	-.0041	-.0033
.500	-.0400	-.0350	-.0209
.950	-.0325	-.0353	-.0231

MACH (1) = .230 ALPHA (2) = 5.230

X/LD	.050	.500	.950
X/LW			
.050	.1283	.1234	.1294
.500	.1023	.1023	.1149
.950	.1020	.1047	.1127

MACH (1) = .230 ALPHA (3) = 10.470

X/LD	.050	.500	.950
X/LW			
.050	.2680	.2604	.2678
.500	.2414	.2428	.2550
.950	.2436	.2480	.2547

MACH (1) = .230 ALPHA (4) = 15.750

X/LD	.050	.500	.950
X/LW			
.050	.4034	.3950	.4051
.500	.3755	.3828	.3918
.950	.3817	.3877	.3950

MACH (1) = .230 ALPHA (5) = 18.910

X/LD	.050	.500	.950
X/LW			
.050	.4857	.4718	.4778
.500	.4493	.4583	.4678
.950	.4631	.4721	.4753

NAAL 737 OA143 ORB/B66-NOSE GEAR FRONT WALL CPS (RFCJ34) (14 MAY 75)

REFERENCE DATA

SREF =	2690.0000 SQ.FT.	XMRP =	1076.7000 IN.XO		
LREF =	474.8000 IN.	YMRP =	.0000 IN.YO		
BREF =	936.6800 IN.	ZMRP =	375.0000 INZO		
SCALE =	.0405				

PARAMETRIC DATA

BETA =	8.000	BDFLAP =	-11.700
ELEVON =	5.000	RUDDER =	.000
SPDBRK =	25.000	GRDPLN =	.000
LNGRPS =	1.000	LNDGDR =	100.000

SECTION (1)NS GR FRT WAL CPS DEPENDENT VARIABLE CP

MACH (1) = .230 ALPHA (1) = -4.170

X/LD	.050	.500	.950
X/LW			
.050	-.1041	-.1208	-.1071
.500	-.1441	-.1441	-.1241
.950	-.1389	-.1441	-.1326

MACH (1) = .230 ALPHA (2) = -2.060

X/LD	.050	.500	.950
X/LW			
.050	-.0593	-.0687	-.0549
.500	-.0860	-.0945	-.0706
.950	-.0835	-.0893	-.0772

MACH (1) = .230 ALPHA (3) = .020

X/LD	.050	.500	.950
X/LW			
.050	-.0074	-.0170	-.0025
.500	-.0340	-.0428	-.0145
.950	-.0310	-.0332	-.0230

MACH (1) = .230 ALPHA (4) = 2.090

X/LD	.050	.500	.950
X/LW			
.050	.0482	.0359	.0493
.500	.0142	.0084	.0309
.950	.0235	.0243	.0340

MACH (1) = .230 ALPHA (5) = 4.170

X/LD	.050	.500	.950
X/LW			
.050	.1119	.0820	.0905
.500	.0139	.0364	.0584
.950	.0773	.0864	.0872

MACH (1) = .230 ALPHA (6) = 6.270

X/LD	.050	.500	.950
X/LW			
.050	.1681	.1326	.1279
.500	.0723	.0935	.1092
.950	.1356	.1411	.1320

MACH (1) = .230 ALPHA (7) = 8.370

X/LD	.050	.500	.950
X/LW			
.050	.2195	.1825	.1801
.500	.1328	.1519	.1623
.950	.1926	.1910	.1814

NAAL 737 OA143 ORB/B66-NOSE GEAR FRONT WALL CPS (RFCJ34)

SECTION (1)NS GR FRT WAL CPS DEPENDENT VARIABLE CP

MACH (1) = .230 ALPHA (8) = 10.470

X/LD	.050	.500	.950
X/LW			
.050	.2709	.2356	.2258
.500	.1910	.2048	.2198
.950	.2451	.2391	.2347

MACH (1) = .230 ALPHA (9) = 12.570

X/LD	.050	.500	.950
X/LW			
.050	.3265	.2863	.2782
.500	.2494	.2646	.2749
.950	.2982	.2885	.2833

MACH (1) = .230 ALPHA (10) = 14.650

X/LD	.050	.500	.950
X/LW			
.050	.3786	.3309	.3319
.500	.3121	.3219	.3322
.950	.3493	.3379	.3376

MACH (1) = .230 ALPHA (11) = 16.770

X/LD	.050	.500	.950
X/LW			
.050	.4277	.3850	.3858
.500	.3733	.3801	.3891
.950	.4021	.3940	.3940

MACH (1) = .230 ALPHA (12) = 18.880

X/LD	.050	.500	.950
X/LW			
.050	.4720	.4384	.4386
.500	.4273	.4370	.4438
.950	.4519	.4446	.4476

NAAL 737 OA143 ORB/865-NOSE GEAR FRONT WALL CPS (RFCJ35) (14 MAY 75)

REFERENCE DATA

SREF =	2690.0000 SQ.FT.	XMRP =	1076.7000 IN.XO		
LREF =	474.8000 IN.	YMRP =	.0000 IN.YO		
BREF =	936.6800 IN.	ZMRP =	375.0000 INZO		
SCALE =	.0405				

PARAMETRIC DATA

BETA =	.000	BDFLAP =	-11.700
ELEVON =	5.000	RUDDER =	.000
SPDBRK =	25.000	GRDPLN =	.000
LNGRPS =	1.000	LNDGDR =	100.000

SECTION (1)NS GR FRT WAL CPS DEPENDENT VARIABLE CP

MACH (1) = .230 ALPHA (1) = .030

X/LD	.050	.500	.950
X/LW			
.050	-.0145	-.0373	-.0252
.500	-.0288	-.0384	-.0332
.950	-.0233	-.0346	-.0272

MACH (1) = .230 ALPHA (2) = 5.230

X/LD	.050	.500	.950
X/LW			
.050	.1222	.1131	.1227
.500	.1017	.1036	.1137
.950	.1058	.1052	.1123

MACH (1) = .230 ALPHA (3) = 10.470

X/LD	.050	.500	.950
X/LW			
.050	.2517	.2591	.2653
.500	.2452	.2539	.2591
.950	.2455	.2490	.2574

MACH (1) = .230 ALPHA (4) = 15.750

X/LD	.050	.500	.950
X/LW			
.050	.3906	.3934	.3969
.500	.3885	.3874	.3925
.950	.3866	.3868	.3928

MACH (1) = .230 ALPHA (5) = 18.910

X/LD	.050	.500	.950
X/LW			
.050	.4705	.4713	.4729
.500	.4686	.4648	.4729
.950	.4683	.4694	.4740

NAAL 737 OA143 ORB/B65-NOSE GEAR FRONT WALL CPS (RFCJ36) (14 MAY 75)

REFERENCE DATA

SREF =	2690.0000 SQ.FT.	XMRP =	1076.7000 IN.XO		
LREF =	474.8000 IN.	YMRP =	.0000 IN.YO		
BREF =	936.6800 IN.	ZMRP =	375.0000 INZO		
SCALE =	.0405				

PARAMETRIC DATA

BETA =	-4.000	BDFLAP =	-11.700
ELEVON =	5.000	RUDDER =	.000
SPDBRK =	25.000	GRDPLN =	.000
LNGRPS =	1.000	LNDGDR =	100.000

SECTION (1)NS GR FRT WAL CPS DEPENDENT VARIABLE CP

MACH (1) = .230 ALPHA (1) = .000

X/LD	.050	.500	.950
X/LW			
.050	-.0420	-.0475	-.0327
.500	-.0478	-.0497	-.0321
.950	-.0220	-.0206	-.0137

MACH (1) = .230 ALPHA (2) = 5.260

X/LD	.050	.500	.950
X/LW			
.050	.0931	.0983	.1044
.500	.0925	.0923	.1077
.950	.1192	.1206	.1258

MACH (1) = .230 ALPHA (3) = 10.490

X/LD	.050	.500	.950
X/LW			
.050	.2367	.2408	.2454
.500	.2351	.2370	.2462
.950	.2543	.2522	.2603

MACH (1) = .230 ALPHA (4) = 15.770

X/LD	.050	.500	.950
X/LW			
.050	.3763	.3823	.3904
.500	.3687	.3766	.3896
.950	.3920	.3877	.3985

MACH (1) = .230 ALPHA (5) = 18.920

X/LD	.050	.500	.950
X/LW			
.050	.4594	.4643	.4710
.500	.4372	.4445	.4607
.950	.4745	.4667	.4718

NAAL 737 OA143 ORB/865-NOSE GEAR FRONT WALL CPS (RFCJ37) (14 MAY 75)

REFERENCE DATA

SREF =	2690.0000 SQ.FT.	XMRP =	1076.7000 IN.XO		
LREF =	474.8000 IN.	YMRP =	.0000 IN.YO		
BREF =	936.6800 IN.	ZMRP =	375.0000 INZO		
SCALE =	.0405				

PARAMETRIC DATA

BETA =	-8.000	BDFLAP =	-11.700
ELEVON =	5.000	RUDDER =	.000
SPDBRK =	25.000	GRDPLN =	.000
LNGRPS =	1.000	LNDGDR =	100.000

SECTION (1)NS GR FRT WAL CPS DEPENDENT VARIABLE CP

MACH (1) = .230 ALPHA (1) = .030

X/LD	.050	.500	.950
X/LW			
.050	-.0368	-.0392	-.0274
.500	-.0340	-.0464	-.0236
.950	-.0244	-.0357	-.0167

MACH (1) = .230 ALPHA (2) = 5.250

X/LD	.050	.500	.950
X/LW			
.050	.1007	.1092	.1119
.500	.0565	.0677	.0883
.950	.1144	.0968	.1064

MACH (1) = .230 ALPHA (3) = 10.510

X/LD	.050	.500	.950
X/LW			
.050	.2431	.2404	.2314
.500	.1993	.2093	.2164
.950	.2502	.2300	.2286

MACH (1) = .230 ALPHA (4) = 15.790

X/LD	.050	.500	.950
X/LW			
.050	.3661	.3582	.3593
.500	.3362	.3449	.3541
.950	.3715	.3465	.3487

MACH (1) = .230 ALPHA (5) = 18.950

X/LD	.050	.500	.950
X/LW			
.050	.4434	.4354	.4426
.500	.4236	.4282	.4399
.950	.4497	.4304	.4299

NAAL 737 OA143 ORB/B65-NOSE GEAR FRONT WALL CPS (RFCJ38) (14 MAY 75)

REFERENCE DATA

SREF =	2690.0000 SQ.FT.	XMRP =	1076.7000 IN.XO
LREF =	474.8000 IN.	YMRP =	.0000 IN.YO
BREF =	936.6800 IN.	ZMRP =	375.0000 INZO
SCALE =	.0405		

PARAMETRIC DATA

BETA =	4.000	BDFLAP =	-11.700
ELEVON =	5.000	RUDDER =	.000
SPDBRK =	25.000	GRDPLN =	.000
LNGRPS =	1.000	LNDGDR =	100.000

SECTION (1)NS GR FRT WAL CPS DEPENDENT VARIABLE CP

MACH (1) = .230 ALPHA (1) = .010

X/LD	.050	.500	.950
X/LW			
.050	.0021	-.0041	-.0011
.500	-.0381	-.0307	-.0203
.950	-.0307	-.0346	-.0206

MACH (1) = .230 ALPHA (2) = 5.240

X/LD	.050	.500	.950
X/LW			
.050	.1287	.1227	.1301
.500	.1006	.1028	.1150
.950	.1031	.1056	.1136

MACH (1) = .230 ALPHA (3) = 10.090

X/LD	.050	.500	.950
X/LW			
.050	.4905	.4758	.4753
.500	.4516	.4592	.4707
.950	.4679	.4737	.4807

MACH (1) = .230 ALPHA (4) = 10.460

X/LD	.050	.500	.950
X/LW			
.050	.2644	.2587	.2672
.500	.2389	.2451	.2555
.950	.2454	.2487	.2552

MACH (1) = .230 ALPHA (5) = 15.730

X/LD	.050	.500	.950
X/LW			
.050	.4052	.3976	.4060
.500	.3783	.3840	.3927
.950	.3837	.3857	.3935

NAAL 737 OA143 ORB/865-NOSE GEAR FRONT WALL CPS (RFCJ39) (14 MAY 75)

REFERENCE DATA

SREF =	2690.0000 SQ.FT.	XMRP =	1076.7000 IN.XO		
LREF =	474.8000 IN.	YMRP =	.0000 IN.YO		
BREF =	936.6800 IN.	ZMRP =	375.0000 INZO		
SCALE =	.0405				

PARAMETRIC DATA

BETA =	8.000	BDFLAP =	-11.700
ELEVON =	5.000	RUDDER =	.000
SPDBRK =	25.000	GRDPLN =	.000
LNGRPS =	1.000	LNDGDR =	100.000

SECTION (1)NS GR FRT WAL CPS DEPENDENT VARIABLE CP

MACH (1) = .230 ALPHA (1) = .020

X/LD	.050	.500	.950
X/LW			
.050	-.0074	-.0143	-.0003
.500	-.0349	-.0428	-.0167
.950	-.0277	-.0338	-.0247

MACH (1) = .230 ALPHA (2) = 5.250

X/LD	.050	.500	.950
X/LW			
.050	.1438	.1079	.1049
.500	.0427	.0635	.0827
.950	.1035	.1147	.1079

MACH (1) = .230 ALPHA (3) = 10.460

X/LD	.050	.500	.950
X/LW			
.050	.2733	.2351	.2288
.500	.1935	.2085	.2193
.950	.2429	.2405	.2304

MACH (1) = .230 ALPHA (4) = 15.740

X/LD	.050	.500	.950
X/LW			
.050	.4002	.3616	.3592
.500	.3426	.3532	.3614
.950	.3788	.3646	.3654

MACH (1) = .230 ALPHA (5) = 18.890

X/LD	.050	.500	.950
X/LW			
.050	.4748	.4373	.4373
.500	.4314	.4379	.4441
.950	.4561	.4474	.4485

NAAL 737 OA143 ORB/B67-NOSE GEAR FRONT WALL CPS (RFCJ56) (14 MAY 75)

REFERENCE DATA

SREF = 2690.0000 SQ.FT. XMRP = 1076.7000 IN.XO
LREF = 474.8000 IN. YMRP = .0000 IN.YO
BREF = 936.6800 IN. ZMRP = 375.0000 INZO
SCALE = .0405

PARAMETRIC DATA

BETA = .000 BDFLAP = -11.700
ELEVON = 5.000 RUDDER = .000
SPDBRK = 25.000 GROPLN = .000
LNGRPS = 1.000 LNDGDR = 100.000

SECTION (1)NS GR FRT WAL CPS DEPENDENT VARIABLE CP

MACH (1) = .230 ALPHA (1) = -4.160

X/LD	.050	.500	.950
X/LW			
.050	-.1145	-.1430	-.1351
.500	-.1345	-.1452	-.1397
.950	-.1211	-.1441	-.1351

MACH (1) = .230 ALPHA (2) = -2.080

X/LD	.050	.500	.950
X/LW			
.050	-.0638	-.0932	-.0831
.500	-.0811	-.0938	-.0880
.950	-.0743	-.0913	-.0820

MACH (1) = .230 ALPHA (3) = .020

X/LD	.050	.500	.950
X/LW			
.050	-.0115	-.0379	-.0267
.500	-.0300	-.0377	-.0313
.950	-.0214	-.0344	-.0302

MACH (1) = .230 ALPHA (4) = 2.110

X/LD	.050	.500	.950
X/LW			
.050	.0446	.0202	.0323
.500	.0238	.0180	.0249
.950	.0345	.0208	.0249

MACH (1) = .230 ALPHA (5) = 4.200

X/LD	.050	.500	.950
X/LW			
.050	.0983	.0854	.0983
.500	.0753	.0761	.0832
.950	.0821	.0766	.0799

MACH (1) = .230 ALPHA (6) = 6.290

X/LD	.050	.500	.950
X/LW			
.050	.1491	.1483	.1540
.500	.1332	.1368	.1444
.950	.1326	.1348	.1400

MACH (1) = .230 ALPHA (7) = 8.400

X/LD	.050	.500	.950
X/LW			
.050	.1967	.1999	.2097
.500	.1907	.1956	.2056
.950	.1885	.1888	.1975

NAAL 737 OA143 ORB/B67-NOSE GEAR FRONT WALL CPS (RFCJ56)

SECTION (1)NS GR FRT WAL CPS DEPENDENT VARIABLE CP

MACH (1) = .230 ALPHA (8) = 10.490

X/LD	.050	.500	.950
X/LW			
.050	.2531	.2570	.2654
.500	.2469	.2518	.2621
.950	.2442	.2466	.2559

MACH (1) = .230 ALPHA (9) = 12.590

X/LD	.050	.500	.950
X/LW			
.050	.3077	.3104	.3164
.500	.3020	.3074	.3142
.950	.3030	.3014	.3106

MACH (1) = .230 ALPHA (10) = 14.700

X/LD	.050	.500	.950
X/LW			
.050	.3649	.3621	.3690
.500	.3594	.3605	.3684
.950	.3597	.3597.	.3657

MACH (1) = .230 ALPHA (11) = 16.800

X/LD	.050	.500	.950
X/LW			
.050	.4153	.4159	.4262
.500	.4142	.4167	.4191
.950	.4126	.4156	.4208

MACH (1) = .230 ALPHA (12) = 18.910

X/LD	.050	.500	.950
X/LW			
.050	.4685	.4690	.4728
.500	.4687	.4679	.4693
.950	.4690	.4685	.4717

NAAL 737 OA143 ORB/B67-NOSE GEAR FRONT WALL CPS (RFCJ60) (14 MAY 75)

REFERENCE DATA

SREF =	2690.0000 SQ.FT.	XMRP =	1076.7000 IN.XO		
LREF =	474.8000 IN.	YMRP =	.0000 IN.YO		
BREF =	936.6800 IN.	ZMRP =	375.0000 INZO		
SCALE =	.0405				

PARAMETRIC DATA

BETA =	8.000	BDFLAP =	-11.700
ELEVON =	5.000	RUDDER =	.000
SPDBRK =	25.000	GRDPLN =	.000
LNGRPS =	1.000	LNDGDR =	100.000

SECTION (1)NS GR FRT WAL CPS DEPENDENT VARIABLE CP

MACH (1) = .230 ALPHA (1) = -4.130

X/LD	.050	.500	.950
X/LW			
.050	-.1126	-.1238	-.1068
.500	-.1425	-.1444	-.1213
.950	-.1392	-.1417	-.1329

MACH (1) = .230 ALPHA (2) = -2.050

X/LD	.050	.500	.950
X/LW			
.050	-.0628	-.0733	-.0546
.500	-.0867	-.0936	-.0686
.950	-.0851	-.0889	-.0777

MACH (1) = .230 ALPHA (3) = .020

X/LD	.050	.500	.950
X/LW			
.050	-.0063	-.0173	-.0019
.500	-.0313	-.0418	-.0157
.950	-.0319	-.0341	-.0225

MACH (1) = .230 ALPHA (4) = 2.120

X/LD	.050	.500	.950
X/LW			
.050	.0469	.0351	.0518
.500	.0180	.0103	.0351
.950	.0213	.0238	.0345

MACH (1) = .230 ALPHA (5) = 4.180

X/LD	.050	.500	.950
X/LW			
.050	.1091	.0832	.0808
.500	.0318	.0379	.0632
.950	.0791	.0871	.0882

MACH (1) = .230 ALPHA (6) = 6.290

X/LD	.050	.500	.950
X/LW			
.050	.1662	.1323	.1260
.500	.0795	.0957	.1111
.950	.1348	.1384	.1326

MACH (1) = .230 ALPHA (7) = 8.380

X/LD	.050	.500	.950
X/LW			
.050	.2167	.1833	.1794
.500	.1361	.1540	.1663
.950	.1909	.1912	.1822

NAAL 737 OA143 ORB/867-NOSE GEAR FRONT WALL CPS (RFCJ60)

SECTION (1)NS GR FRT WAL CPS DEPENDENT VARIABLE CP

MACH (1) = .230 ALPHA (8) = 9.020

X/LD	.050	.500	.950
X/LW			
.050	.4229	.3868	.3849
.500	.3748	.3833	.3929
.950	.4016	.3926	.3942

MACH (1) = .230 ALPHA (9) = 10.480

X/LD	.050	.500	.950
X/LW			
.050	.2701	.2337	.2274
.500	.1942	.2089	.2195
.950	.2437	.2399	.2315

MACH (1) = .230 ALPHA (10) = 12.590

X/LD	.050	.500	.950
X/LW			
.050	.3245	.2799	.2768
.500	.2535	.2652	.2763
.950	.2954	.2851	.2804

MACH (1) = .230 ALPHA (11) = 14.680

X/LD	.050	.500	.950
X/LW			
.050	.3751	.3318	.3294
.500	.3152	.3253	.3348
.950	.3498	.3378	.3386

MACH (1) = .230 ALPHA (12) = 18.890

X/LD	.050	.500	.950
X/LW			
.050	.4721	.4397	.4424
.500	.4304	.4408	.4478
.950	.4533	.4473	.4495

NAAL 737 OA143 ORB/B66-NOSE GEAR AFT WALL CPS (RFCK01) (14 MAY 75)

REFERENCE DATA

SREF =	2690.0000 SQ.FT.	XMRP =	1076.7000 IN.XO		
LREF =	474.8000 IN.	YMRP =	.0000 IN.YO		
BREF =	936.6800 IN.	ZMRP =	375.0000 IN.ZO		
SCALE =	.0405				

PARAMETRIC DATA

BETA =	.000	BDFLAP =	-11.700
ELEVON =	5.000	RUDDER =	.000
SPDBRK	25.000	GRDPLN =	1.000
LNGRPS =	1.000	LNDGDR =	100.000

SECTION (1)NS GR AFT WAL CPS DEPENDENT VARIABLE CP

MACH (1) = .200 ALPHA (1) = .010

X/LD	.050	.500	.950
X/LW			
.050	.0485	.0303	.1451
.500	.1189	.0382	-.3624
.950	.0442	.0213	.0847

MACH (1) = .200 ALPHA (2) = 5.380

X/LD	.050	.500	.950
X/LW			
.050	.1778	.1708	.2270
.500	.2326	.1636	-.2351
.950	.1735	.1606	.1411

MACH (1) = .200 ALPHA (3) = 10.710

X/LD	.050	.500	.950
X/LW			
.050	.3221	.3228	.2886
.500	.3347	.2895	-.0966
.950	.3192	.3093	.2230

MACH (1) = .200 ALPHA (4) = 16.140

X/LD	.050	.500	.950
X/LW			
.050	.4384	.4603	.3754
.500	.4394	.4168	.0785
.950	.4400	.4603	.3110

MACH (1) = .200 ALPHA (5) = 19.380

X/LD	.050	.500	.950
X/LW			
.050	.5118	.5407	.4022
.500	.5102	.4966	.1854
.950	.5112	.5453	.3535

NAAL 737 OA143 ORB/866-NOSE GEAR AFT WALL CPS (RFCK02) (14 MAY 75)

REFERENCE DATA

SREF =	2890.0000 SQ.FT.	XMRP =	1076.7000 IN.XO		
LREF =	474.8000 IN.	YMRP =	.0000 IN.YO		
BREF =	936.6800 IN.	ZMRP =	375.0000 IN.ZO		
SCALE =	.0405				

PARAMETRIC DATA

BETA =	-4.000	BDFLAP =	-11.700
ELEVON =	5.000	RUDDER =	.000
SPDBRK =	25.000	GRDPLN =	1.000
LNGRPS =	1.000	LNDGDR =	100.000

SECTION (1)NS GR AFT WAL CPS DEPENDENT VARIABLE CP

MACH (1) = .200 ALPHA (1) = .010

X/LD	.050	.500	.950
X/LW			
.050	.0608	.0739	.4343
.500	.0855	.0226	-.3874
.950	.0729	.0266	-.1150

MACH (1) = .200 ALPHA (2) = 5.370

X/LD	.050	.500	.950
X/LW			
.050	.1880	.2190	.2933
.500	.1942	.1470	-.2645
.950	.1903	.1536	.0116

MACH (1) = .200 ALPHA (3) = 10.760

X/LD	.050	.500	.950
X/LW			
.050	.3231	.3603	.3165
.500	.3208	.2875	-.1248
.950	.3214	.2812	.1309

MACH (1) = .200 ALPHA (4) = 16.150

X/LD	.050	.500	.950
X/LW			
.050	.4543	.5028	.3297
.500	.4442	.4166	.0586
.950	.4381	.4289	.2373

MACH (1) = .200 ALPHA (5) = 19.360

X/LD	.050	.500	.950
X/LW			
.050	.5381	.5855	.3523
.500	.5222	.5014	.1567
.950	.5241	.5202	.2772

NAAL 737 OA143 ORB/B66-NOSE GEAR AFT WALL CPS (RFCK03) (14 MAY 75)

REFERENCE DATA

SREF = 2690.0000 SQ.FT. XMRP = 1076.7000 IN.XO
LREF = 474.8000 IN. YMRP = .0000 IN.YO
BREF = 936.6800 IN. ZMRP = 375.0000 IN.ZO
SCALE = .0405

PARAMETRIC DATA

BETA = -8.000 BDFLAP = -11.700
ELEVON = 5.000 RUDDER = .000
SPDBRK = 25.000 GRDPLN = 1.000
LNGRPS = 1.000 LNDGDR = 100.000

SECTION (1)NS GR AFT WAL CPS DEPENDENT VARIABLE CP

MACH (1) = .200 ALPHA (1) = .030

X/LD	.050	.500	.950
X/LW			
.050	.0537	.0967	.2317
.500	.0656	.0358	-.3348
.950	.1053	.0653	-.1217

MACH (1) = .200 ALPHA (2) = 5.380

X/LD	.050	.500	.950
X/LW			
.050	.1974	.2620	.2211
.500	.1917	.1561	-.2116
.950	.2254	.1970	-.0180

MACH (1) = .200 ALPHA (3) = 10.760

X/LD	.050	.500	.950
X/LW			
.050	.3360	.3889	.2391
.500	.3104	.2828	-.1016
.950	.3416	.3170	.0835

MACH (1) = .200 ALPHA (4) = 16.170

X/LD	.050	.500	.950
X/LW			
.050	.4653	.5125	.2826
.500	.4354	.4066	.0385
.950	.4712	.4407	.1763

MACH (1) = .200 ALPHA (5) = 19.400

X/LD	.050	.500	.950
X/LW			
.050	.5328	.5814	.3098
.500	.5087	.4829	.1145
.950	.5393	.5103	.2254

NAAL 737 OA143 ORB/866-NOSE GEAR AFT WALL CPS (RFCK04) (14 MAY 75)

REFERENCE DATA

SREF =	2690.0000 SQ.FT.	XMRP =	1076.7000 IN.XO
LREF =	474.8000 IN.	YMRP =	.0000 IN.YO
BREF =	936.6800 IN.	ZMRP =	375.0000 IN.ZO
SCALE =	.0405		

PARAMETRIC DATA

BETA =	4.000	BDFLAP =	-11.700
ELEVON =	5.000	RUDDER =	.000
SPDBRK =	25.000	GRDPLN =	1.000
LNGRPS =	1.000	LNDGDR =	100.000

SECTION (1)NS GR AFT WAL CPS DEPENDENT VARIABLE CP

MACH (1) = .200 ALPHA (1) = .000

X/LD	.050	.500	.950
X/LW			
.050	.0787	.0321	-.0684
.500	.1058	.0384	-.3586
.950	.0685	.0764	.3610

MACH (1) = .200 ALPHA (2) = 5.340

X/LD	.050	.500	.950
X/LW			
.050	.1922	.1601	.0404
.500	.2027	.1548	-.2532
.950	.1958	.2219	.3294

MACH (1) = .200 ALPHA (3) = 10.730

X/LD	.050	.500	.950
X/LW			
.050	.3167	.2976	.1857
.500	.3283	.2894	-.1151
.950	.3312	.3704	.3036

MACH (1) = .200 ALPHA (4) = 16.140

X/LD	.050	.500	.950
X/LW			
.050	.4401	.4352	.3188
.500	.4477	.4189	.0760
.950	.4614	.5121	.3109

MACH (1) = .200 ALPHA (5) = 19.370

X/LD	.050	.500	.950
X/LW			
.050	.5154	.5187	.3425
.500	.5222	.4943	.1762
.950	.5404	.6054	.3269

NAAL 737 OA143 ORB/B66-NOSE GEAR AFT WALL CPS (RFCK05) (14 MAY 75)

REFERENCE DATA

SREF =	2690.0000 SQ.FT.	XMRP =	1076.7000 IN.XO		
LREF =	474.8000 IN.	YMRP =	.0000 IN.YO		
BREF =	936.6800 IN.	ZMRP =	375.0000 IN.ZO		
SCALE =	.0405				

PARAMETRIC DATA

BETA =	8.000	BDFLAP =	-11.700
ELEVON =	5.000	RUDDER =	.000
SPDBRK =	25.000	GRDPLN =	1.000
LNGRPS =	1.000	LNDGDR =	100.000

SECTION (1)NS GR AFT WAL CPS DEPENDENT VARIABLE CP

MACH (1) = .200 ALPHA (1) = .030

X/LD	.050	.500	.950
X/LW			
.050	.1043	.0707	-.1265
.500	.0825	.0413	-.3400
.950	.0667	.1310	.3731

MACH (1) = .200 ALPHA (2) = 5.360

X/LD	.050	.500	.950
X/LW			
.050	.2254	.2023	-.0363
.500	.1904	.1610	-.2063
.950	.2069	.2961	.1805

MACH (1) = .200 ALPHA (3) = 10.770

X/LD	.050	.500	.950
X/LW			
.050	.3499	.3204	.0543
.500	.3144	.2813	-.0802
.950	.3463	.4176	.1942

MACH (1) = .200 ALPHA (4) = 16.160

X/LD	.050	.500	.950
X/LW			
.050	.4697	.4422	.1706
.500	.4353	.4059	.0583
.950	.4759	.5577	.2504

MACH (1) = .200 ALPHA (5) = 19.390

X/LD	.050	.500	.950
X/LW			
.050	.5397	.5140	.2529
.500	.5068	.4814	.1288
.950	.5443	.6251	.2849

NAAL 737 OA143 ORB/B66-NOSE GEAR AFT WALL CPS (RFCK06) (14 MAY 75)

REFERENCE DATA

SREF =	2690.0000 SQ.FT.	XMRP =	1076.7000 IN.XO		
LREF =	474.8000 IN.	YMRP =	.0000 IN.YO		
BREF =	936.6800 IN.	ZMRP =	375.0000 IN.ZO		
SCALE =	.0405				

PARAMETRIC DATA

BETA =	.000	BDFLAP =	-11.700
ELEVON =	10.000	RUDDER =	.000
SPDBRK =	25.000	GRDPLN =	1.000
LNGRPS =	1.000	LNDGDR =	100.000

SECTION (1)NS GR AFT WAL CPS DEPENDENT VARIABLE CP

MACH (1) = .200 ALPHA (1) = .110

X/LD	.050	.500	.950
X/LW			
.050	.0533	.0327	.1422
.500	.1222	.0397	-.3640
.950	.0463	.0207	.0776

MACH (1) = .200 ALPHA (2) = 5.470

X/LD	.050	.500	.950
X/LW			
.050	.1799	.1736	.2304
.500	.2334	.1647	-.2375
.950	.1766	.1640	.1285

MACH (1) = .200 ALPHA (3) = 10.840

X/LD	.050	.500	.950
X/LW			
.050	.3198	.3178	.2923
.500	.3313	.2893	-.1014
.950	.3178	.3123	.2350

MACH (1) = .200 ALPHA (4) = 16.230

X/LD	.050	.500	.950
X/LW			
.050	.4418	.4621	.3741
.500	.4412	.4225	.0763
.950	.4418	.4592	.3136

MACH (1) = .200 ALPHA (5) = 19.450

X/LD	.050	.500	.950
X/LW			
.050	.5156	.5457	.3991
.500	.5162	.5051	.1882
.950	.5146	.5493	.3530

NAAL 737 OA143 ORB/866-NOSE GEAR AFT WALL CPS (RFCK07) (14 MAY 75)

REFERENCE DATA

SREF =	2690.0000 SQ.FT.	XMRP =	1076.7000 IN.XO		
LREF =	474.8000 IN.	YMRP =	.0000 IN.YO		
BREF =	936.6800 IN.	ZMRP =	375.0000 IN.ZO		
SCALE =	.0405				

PARAMETRIC DATA

BETA =	-4.000	BDFLAP =	-11.700
ELEVON =	10.000	RUDDER =	.000
SPDBRK =	25.000	GRDPLN =	1.000
LNGRPS =	1.000	LNDGDR =	100.000

SECTION (1)NS GR AFT WAL CPS DEPENDENT VARIABLE CP

MACH (1) = .200 ALPHA (1) = .130

X/LD	.050	.500	.950
X/LW			
.050	.0592	.0767	.4499
.500	.0843	.0245	-.3833
.950	.0741	.0288	-.1178

MACH (1) = .200 ALPHA (2) = 5.470

X/LD	.050	.500	.950
X/LW			
.050	.1860	.2207	.3275
.500	.1933	.1501	-.2658
.950	.1950	.1560	.0103

MACH (1) = .200 ALPHA (3) = 10.870

X/LD	.050	.500	.950
X/LW			
.050	.3240	.3603	.3217
.500	.3237	.2887	-.1237
.950	.3214	.2877	.1275

MACH (1) = .200 ALPHA (4) = 16.240

X/LD	.050	.500	.950
X/LW			
.050	.4608	.5086	.3275
.500	.4529	.4205	.0639
.950	.4480	.4388	.2411

MACH (1) = .200 ALPHA (5) = 19.450

X/LD	.050	.500	.950
X/LW			
.050	.5376	.5847	.3522
.500	.5278	.5002	.1558
.950	.5242	.5245	.2810

NAAL 737 OA143 ORB/B66-NOSE GEAR AFT WALL CPS (RFCK08) (14 MAY 75)

REFERENCE DATA

SREF =	2690.0000 SQ.FT.	XMRP =	1076.7000 IN.XO		
LREF =	474.8000 IN.	YMRP =	.0000 IN.YO		
BREF =	936.6800 IN.	ZMRP =	375.0000 IN.ZO		
SCALE =	.0405				

PARAMETRIC DATA

BETA =	-8.000	BDFLAP =	-11.700
ELEVON =	10.000	RUDDER =	.000
SPDBRK =	25.000	GRDPLN =	1.000
LNGRPS =	1.000	LNDGDR =	100.000

SECTION (1)NS GR AFT WAL CPS DEPENDENT VARIABLE CP

MACH (1) = .200 ALPHA (1) = .120

X/LD	.050	.500	.950
X/LW			
.050	.0577	.1047	.1719
.500	.0669	.0358	-.3465
.950	.1103	.0679	-.1300

MACH (1) = .200 ALPHA (2) = 5.490

X/LD	.050	.500	.950
X/LW			
.050	.2033	.2689	.2184
.500	.1891	.1587	-.2225
.950	.2264	.1990	-.0249

MACH (1) = .200 ALPHA (3) = 10.870

X/LD	.050	.500	.950
X/LW			
.050	.3362	.3819	.2410
.500	.3113	.2811	-.1022
.950	.3438	.3169	.0762

MACH (1) = .200 ALPHA (4) = 16.230

X/LD	.050	.500	.950
X/LW			
.050	.4655	.5136	.2822
.500	.4334	.4066	.0354
.950	.4704	.4406	.1745

MACH (1) = .200 ALPHA (5) = 19.440

X/LD	.050	.500	.950
X/LW			
.050	.5378	.5830	.3131
.500	.5113	.4865	.1116
.950	.5437	.5126	.2248

NAAL 737 OA143 ORB/B66-NOSE GEAR AFT WALL CPS (RFCK09) (14 MAY 75)

REFERENCE DATA

SREF =	2690.0000 SQ.FT.	XMRP =	1076.7000 IN.XO		
LREF =	474.8000 IN.	YMRP =	.0000 IN.YO		
BREF =	936.6800 IN.	ZMRP =	375.0000 IN.ZO		
SCALE =	.0405				

PARAMETRIC DATA

BETA =	4.000	BDFLAP =	-11.700
ELEVON =	10.000	RUDDER =	.000
SPDBRK =	25.000	GRDPLN =	1.000
LNGRPS =	1.000	LNDGDR =	100.000

SECTION (1)NS GR AFT WAL CPS DEPENDENT VARIABLE CP

MACH (1) = .200 ALPHA (1) = .110

X/LD	.050	.500	.950
X/LW			
.050	.0781	.0312	-.0641
.500	.1059	.0397	-.3550
.950	.0715	.0718	.3584

MACH (1) = .200 ALPHA (2) = 5.450

X/LD	.050	.500	.950
X/LW			
.050	.1882	.1612	.0443
.500	.2037	.1542	-.2515
.950	.1994	.2183	.3189

MACH (1) = .200 ALPHA (3) = 10.830

X/LD	.050	.500	.950
X/LW			
.050	.3210	.2977	.1876
.500	.3273	.2922	-.1133
.950	.3273	.3676	.3043

MACH (1) = .200 ALPHA (4) = 16.230

X/LD	.050	.500	.950
X/LW			
.050	.4373	.4377	.3116
.500	.4508	.4190	.0751
.950	.4652	.5179	.3112

MACH (1) = .200 ALPHA (5) = 19.440

X/LD	.050	.500	.950
X/LW			
.050	.5221	.5264	.3517
.500	.5270	.4967	.1764
.950	.5489	.6113	.3292

NAAL 737 OA143 ORB/866-NOSE GEAR AFT WALL CPS (RFCK10) (14 MAY 75)

REFERENCE DATA

SREF =	2690.0000 SQ.FT.	XMRP =	1076.7000 IN.XO
LREF =	474.8000 IN.	YMRP =	.0000 IN.YO
BREF =	936.6800 IN.	ZMRP =	375.0000 IN.ZO
SCALE =	.0405		

PARAMETRIC DATA

BETA =	8.000	BDFLAP =	-11.700
ELEVON =	10.000	RUDDER =	.000
SPDBRK =	25.000	GRDPLN =	1.000
LNGRPS =	1.000	LNDGDR =	100.000

SECTION (1)NS GR AFT WAL CPS DEPENDENT VARIABLE CP

MACH (1) = .200 ALPHA (1) = .110

X/LD	.050	.500	.950
X/LW			
.050	.1068	.0743	-.1232
.500	.0843	.0428	-.3388
.950	.0684	.1347	.3919

MACH (1) = .200 ALPHA (2) = 5.430

X/LD	.050	.500	.950
X/LW			
.050	.2260	.2029	-.0293
.500	.1949	.1602	-.1950
.950	.2145	.2975	.1883

MACH (1) = .200 ALPHA (3) = 10.830

X/LD	.050	.500	.950
X/LW			
.050	.3501	.3260	.0588
.500	.3194	.2848	-.0720
.950	.3491	.4220	.2046

MACH (1) = .200 ALPHA (4) = 16.230

X/LD	.050	.500	.950
X/LW			
.050	.4736	.4448	.1785
.500	.4383	.4069	.0641
.950	.4794	.5608	.2543

MACH (1) = .200 ALPHA (5) = 19.430

X/LD	.050	.500	.950
X/LW			
.050	.5412	.5144	.2528
.500	.5076	.4818	.1315
.950	.5457	.6279	.2874

NAAL 737 OA143 ORB/B66-NOSE GEAR AFT WALL CPS (RFCK11) (14 MAY 75)

REFERENCE DATA

SREF =	2690.0000 SQ.FT.	XMRP =	1076.7000 IN.XO		
LREF =	474.8000 IN.	YMRP =	.0000 IN.YO		
BREF =	936.6800 IN.	ZMRP =	375.0000 IN.ZO		
SCALE =	.0405				

PARAMETRIC DATA

BETA =	.000	BDFLAP =	-11.700
ELEVON =	15.000	RUDDER =	.000
SPDBRK =	25.000	GRDPLN =	1.000
LNGRPS =	1.000	LNDGDR =	100.000

SECTION (1)NS GR AFT WAL CPS DEPENDENT VARIABLE CP

MACH (1) = .200 ALPHA (1) = .190

X/LD	.050	.500	.950
X/LW			
.050	.0528	.0346	.1368
.500	.1209	.0399	-.3654
.950	.0475	.0226	.1275

MACH (1) = .200 ALPHA (2) = 5.560

X/LD	.050	.500	.950
X/LW			
.050	.1793	.1727	.2290
.500	.2313	.1641	-.2362
.950	.1734	.1628	.1402

MACH (1) = .200 ALPHA (3) = 10.920

X/LD	.050	.500	.950
X/LW			
.050	.3270	.3208	.2944
.500	.3366	.2914	-.0971
.950	.3237	.3135	.2310

MACH (1) = .200 ALPHA (4) = 16.300

X/LD	.050	.500	.950
X/LW			
.050	.4386	.4640	.3846
.500	.4425	.4255	.0778
.950	.4435	.4627	.3134

MACH (1) = .200 ALPHA (5) = 19.510

X/LD	.050	.500	.950
X/LW			
.050	.5125	.5439	.4013
.500	.5122	.5031	.1845
.950	.5086	.5465	.3517

NAAL 737 OA143 ORB/B66-NOSE GEAR AFT WALL CPS (RFCK12) (14 MAY 75)

REFERENCE DATA

SREF =	2690.0000 SQ.FT.	XMRP =	1076.7000 IN.XO		
LREF =	474.8000 IN.	YMRP =	.0000 IN.YO		
BREF =	936.6800 IN.	ZMRP =	375.0000 IN.ZO		
SCALE =	.0405				

PARAMETRIC DATA

BETA =	-4.000	BDFLAP =	-11.700
ELEVON =	15.000	RUDDER =	.000
SPDBRK =	25.000	GRDPLN =	1.000
LNGRPS =	1.000	LNDGDR =	100.000

SECTION (1)NS GR AFT WAL CPS DEPENDENT VARIABLE CP

MACH (1) = .200 ALPHA (1) = .200

X/LD	.050	.500	.950
X/LW			
.050	.0627	.0753	.4310
.500	.0859	.0256	-.3846
.950	.0780	.0312	-.1102

MACH (1) = .200 ALPHA (2) = 5.570

X/LD	.050	.500	.950
X/LW			
.050	.1888	.2192	.2795
.500	.1947	.1481	-.2622
.950	.1964	.1560	.0156

MACH (1) = .200 ALPHA (3) = 10.970

X/LD	.050	.500	.950
X/LW			
.050	.3241	.3610	.3198
.500	.3228	.2889	-.1224
.950	.3205	.2849	.1321

MACH (1) = .200 ALPHA (4) = 16.300

X/LD	.050	.500	.950
X/LW			
.050	.4616	.5040	.3315
.500	.4530	.4241	.0612
.950	.4478	.4383	.2369

MACH (1) = .200 ALPHA (5) = 19.500

X/LD	.050	.500	.950
X/LW			
.050	.5416	.5883	.3561
.500	.5286	.5009	.1582
.950	.5257	.5273	.2802

NAAL 737 OA143 ORB/B66-NOSE GEAR AFT WALL CPS (RFCK13) (14 MAY 75)

REFERENCE DATA

SREF =	2690.0000 SQ.FT.	XMRP =	1076.7000 IN.XO
LREF =	474.8000 IN.	YMRP =	.0000 IN.YO
BREF =	936.6800 IN.	ZMRP =	375.0000 IN.ZO
SCALE =	.0405		

PARAMETRIC DATA

BETA =	-8.000	BDFLAP =	-11.700
ELEVON =	15.000	RUDDER =	.000
SPDBRK =	25.000	GRDPLN =	1.000
LNGRPS =	1.000	LNDGDR =	100.000

SECTION (1)NS GR AFT WAL CPS DEPENDENT VARIABLE CP

MACH (1) = .200 ALPHA (1) = .210

X/LD	.050	.500	.950
X/LW			
.050	.0572	.1035	.2164
.500	.0661	.0364	-.3448
.950	.1074	.0708	-.1257

MACH (1) = .200 ALPHA (2) = 5.590

X/LD	.050	.500	.950
X/LW			
.050	.2044	.2732	.2299
.500	.1932	.1601	-.2211
.950	.2246	.1992	-.0170

MACH (1) = .200 ALPHA (3) = 10.970

X/LD	.050	.500	.950
X/LW			
.050	.3382	.3868	.2458
.500	.3155	.2843	-.1050
.950	.3454	.3171	.0766

MACH (1) = .200 ALPHA (4) = 16.340

X/LD	.050	.500	.950
X/LW			
.050	.4674	.5159	.2846
.500	.4385	.4099	.0408
.950	.4706	.4427	.1796

MACH (1) = .200 ALPHA (5) = 19.520

X/LD	.050	.500	.950
X/LW			
.050	.5367	.5811	.3135
.500	.5096	.4829	.1160
.950	.5423	.5110	.2253

NAAL 737 OA143 ORB/B66-NOSE GEAR AFT WALL CPS (RFCK14) (14 MAY 75)

REFERENCE DATA

SREF =	2690.0000 SQ.FT.	XMRP =	1076.7000 IN.XO
LREF =	474.8000 IN.	YMRP =	.0000 IN.YO
BREF =	936.6800 IN.	ZMRP =	375.0000 IN.ZO
SCALE =	.0405		

PARAMETRIC DATA

BETA =	4.000	BDFLAP =	-11.700
ELEVON =	15.000	RUDDER =	.000
SPDBRK =	25.000	GRDPLN =	1.000
LNGRPS =	1.000	LNDGDR =	100.000

SECTION (1)NS GR AFT WAL CPS DEPENDENT VARIABLE CP

MACH (1) = .200 ALPHA (1) = .170

X/LD	.050	.500	.950
X/LW			
.050	.0810	.0326	-.0620
.500	.1052	.0412	-.3538
.950	.0720	.0737	.3847

MACH (1) = .200 ALPHA (2) = 5.550

X/LD	.050	.500	.950
X/LW			
.050	.1945	.1648	.0523
.500	.2058	.1571	-.2466
.950	.2005	.2223	.3278

MACH (1) = .200 ALPHA (3) = 10.910

X/LD	.050	.500	.950
X/LW			
.050	.3215	.2981	.1905
.500	.3274	.2895	-.1120
.950	.3311	.3703	.3093

MACH (1) = .200 ALPHA (4) = 16.300

X/LD	.050	.500	.950
X/LW			
.050	.4393	.4393	.3268
.500	.4504	.4217	.0777
.950	.4632	.5170	.3173

MACH (1) = .200 ALPHA (5) = 19.500

X/LD	.050	.500	.950
X/LW			
.050	.5249	.5302	.3539
.500	.5308	.5027	.1809
.950	.5468	.6175	.3307

NAAL 737 OA143 ORB/B66-NOSE GEAR AFT WALL CPS (RFCK15) (14 MAY 75)

REFERENCE DATA

SREF =	2690.0000 SQ.FT.	XMRP =	1076.7000 IN.XO		
LREF =	474.8000 IN.	YMRP =	.0000 IN.YO		
BREF =	936.6800 IN.	ZMRP =	375.0000 IN.ZO		
SCALE =	.0405				

PARAMETRIC DATA

BETA =	8.000	BDFLAP =	-11.700
ELEVON =	15.000	RUDDER =	.000
SPDBRK =	25.000	GRDPLN =	1.000
LNGRPS =	1.000	LNDGDR =	100.000

SECTION (1)NS GR AFT WAL CPS DEPENDENT VARIABLE CP

MACH (1) = .200 ALPHA (1) = .200

X/LD	.050	.500	.950
X/LW			
.050	.1052	.0728	-.1205
.500	.0844	.0421	-.3398
.950	.0711	.1336	.3958

MACH (1) = .200 ALPHA (2) = 5.550

X/LD	.050	.500	.950
X/LW			
.050	.2302	.2050	-.0287
.500	.1970	.1630	-.2061
.950	.2189	.3020	.1898

MACH (1) = .200 ALPHA (3) = 10.930

X/LD	.050	.500	.950
X/LW			
.050	.3513	.3211	.0592
.500	.3191	.2827	-.0696
.950	.3487	.4189	.2075

MACH (1) = .200 ALPHA (4) = 16.300

X/LD	.050	.500	.950
X/LW			
.050	.4765	.4499	.1826
.500	.4414	.4119	.0610
.950	.4798	.5594	.2596

MACH (1) = .200 ALPHA (5) = 19.510

X/LD	.050	.500	.950
X/LW			
.050	.5434	.5181	.2622
.500	.5083	.4823	.1360
.950	.5486	.6283	.2891

NAAL 737 OA143 OR8/B66-NOSE GEAR AFT WALL CPS (RFCK16) (14 MAY 75)

REFERENCE DATA

SREF =	2690.0000 SQ.FT.	XMRP =	1076.7000 IN.XO		
LREF =	474.8000 IN.	YMRP =	.0000 IN.YO		
BREF =	936.6800 IN.	ZMRP =	375.0000 IN.ZO		
SCALE =	.0405				

PARAMETRIC DATA

BETA =	.000	BDFLAP =	-11.700
ELEVON =	15.000	RUDDER =	.000
SPDBRK =	25.000	GRDPLN =	.000
LNGRPS =	1.000	LNDGDR =	100.000

SECTION (1)NS GR AFT WAL CPS DEPENDENT VARIABLE CP

MACH (1) = .230 ALPHA (1) = .120

X/LD	.050	.500	.950
X/LW			
.050	.0130	-.0080	.1533
.500	.0818	.0000	-.3911
.950	.0119	-.0171	.0694

MACH (1) = .230 ALPHA (2) = 5.370

X/LD	.050	.500	.950
X/LW			
.050	.1482	.1386	.2110
.500	.2025	.1301	-.2722
.950	.1402	.1208	.1061

MACH (1) = .230 ALPHA (3) = 10.620

X/LD	.050	.500	.950
X/LW			
.050	.2983	.2970	.2779
.500	.3074	.2633	-.1399
.950	.2904	.2829	.2021

MACH (1) = .230 ALPHA (4) = 15.880

X/LD	.050	.500	.950
X/LW			
.050	.4216	.4489	.3579
.500	.4243	.3994	.0279
.950	.4280	.4440	.2945

MACH (1) = .230 ALPHA (5) = 19.030

X/LD	.050	.500	.950
X/LW			
.050	.5001	.5332	.3827
.500	.4983	.4839	.1344
.950	.4954	.5241	.3289

NAAL 737 OA143 ORB/B66-NOSE GEAR AFT WALL CPS (RFCK17) (14 MAY 75)

REFERENCE DATA

SREF =	2690.0000 SQ.FT.	XMRP =	1076.7000 IN.XO
LREF =	474.8000 IN.	YMRP =	.0000 IN.YO
BREF =	936.6800 IN.	ZMRP =	375.0000 IN.ZO
SCALE =	.0405		

PARAMETRIC DATA

BETA =	-4.000	BDFLAP =	-11.700
ELEVON =	15.000	RUDDER =	.000
SPDBRK =	25.000	GRDPLN =	.000
LNGRPS =	1.000	LNDGDR =	100.000

SECTION (1)NS GR AFT WAL CPS DEPENDENT VARIABLE CP

MACH (1) = .230 ALPHA (1) = .130

X/LD	.050	.500	.950
X/LW			
.050	.0094	.0221	.5038
.500	.0551	-.0103	-.4106
.950	.0401	-.0090	-.1582

MACH (1) = .230 ALPHA (2) = 5.410

X/LD	.050	.500	.950
X/LW			
.050	.1605	.1909	.2957
.500	.1675	.1201	-.3010
.950	.1645	.1279	-.0245

MACH (1) = .230 ALPHA (3) = 10.640

X/LD	.050	.500	.950
X/LW			
.050	.3057	.3466	.3020
.500	.3006	.2626	-.1685
.950	.3003	.2591	.0919

MACH (1) = .230 ALPHA (4) = 15.910

X/LD	.050	.500	.950
X/LW			
.050	.4488	.4995	.3091
.500	.4346	.4014	.0183
.950	.4346	.4180	.2051

MACH (1) = .230 ALPHA (5) = 19.060

X/LD	.050	.500	.950
X/LW			
.050	.5354	.5870	.3347
.500	.5226	.4931	.1186
.950	.5250	.5186	.2485

NAAL 737 OA143 ORB/B66-NOSE GEAR AFT WALL CPS (RFCK18) (14 MAY 75)

REFERENCE DATA

SREF =	2690.0000 SQ.FT.	XMRP =	1076.7000 IN.XO		
LREF =	474.8000 IN.	YMRP =	.0000 IN.YO		
BREF =	936.6800 IN.	ZMRP =	375.0000 IN.ZO		
SCALE =	.0405				

PARAMETRIC DATA

BETA =	-8.000	BDFLAP =	-11.700
ELEVON =	15.000	RUDDER =	.000
SPDBRK =	25.000	GRDPLN =	.000
LNGRPS =	1.000	LNDGDR =	100.000

SECTION (1)NS GR AFT WAL CPS DEPENDENT VARIABLE CP

MACH (1) = .230 ALPHA (1) = .140

X/LD	.050	.500	.950
X/LW			
.050	.0151	.0565	.3167
.500	.0331	-.0009	-.3530
.950	.0670	.0234	-.1533

MACH (1) = .230 ALPHA (2) = 5.420

X/LD	.050	.500	.950
X/LW			
.050	.1733	.2447	.2261
.500	.1688	.1305	-.2434
.950	.1994	.1709	-.0472

MACH (1) = .230 ALPHA (3) = 10.650

X/LD	.050	.500	.950
X/LW			
.050	.3163	.3708	.2339
.500	.2943	.2579	-.1335
.950	.3235	.2978	.0470

MACH (1) = .230 ALPHA (4) = 15.920

X/LD	.050	.500	.950
X/LW			
.050	.4515	.5004	.2589
.500	.4207	.3876	.0038
.950	.4539	.4231	.1551

MACH (1) = .230 ALPHA (5) = 19.070

X/LD	.050	.500	.950
X/LW			
.050	.5217	.5726	.2866
.500	.4952	.4662	.0753
.950	.5275	.4947	.1914

NAAL 737 OA143 ORB/B66-NOSE GEAR AFT WALL CPS (RFCK19) (14 MAY 75)

REFERENCE DATA

SREF = 2690.0000 SQ.FT. XMRP = 1076.7000 IN.XO
LREF = 474.8000 IN. YMRP = .0000 IN.YO
BREF = 936.6800 IN. ZMRP = 375.0000 IN.ZO
SCALE = .0405

PARAMETRIC DATA

BETA = 4.000 BDFLAP = -11.700
ELEVON = 15.000 RUDDER = .000
SPDBRK = 25.000 GRDPLN = .000
LNGRPS = 1.000 LNDGDR = 100.000

SECTION (1)NS GR AFT WAL CPS DEPENDENT VARIABLE CP

MACH (1) = .230 ALPHA (1) = .150

X/LD	.050	.500	.950
X/LW			
.050	.0437	-.0106	-.0890
.500	.0785	.0062	-.3738
.950	.0180	.0190	.3509

MACH (1) = .230 ALPHA (2) = 5.360

X/LD	.050	.500	.950
X/LW			
.050	.1618	.1288	.0231
.500	.1775	.1277	-.2834
.950	.1674	.1818	.3203

MACH (1) = .230 ALPHA (3) = 10.620

X/LD	.050	.500	.950
X/LW			
.050	.2941	.2703	.1832
.500	.3051	.2666	-.1535
.950	.3072	.3457	.2773

MACH (1) = .230 ALPHA (4) = 15.860

X/LD	.050	.500	.950
X/LW			
.050	.4160	.4150	.3075
.500	.4299	.3987	.0350
.950	.4429	.4953	.2918

MACH (1) = .230 ALPHA (5) = 19.040

X/LD	.050	.500	.950
X/LW			
.050	.5010	.5138	.3326
.500	.5117	.4824	.1416
.950	.5282	.5914	.3025

NAAL 737 OA143 ORB/B66-NOSE GEAR AFT WALL CPS (RFCK20) (14 MAY 75)

REFERENCE DATA

SREF =	2690.0000 SQ.FT.	XMRP =	1076.7000 IN.XO		
LREF =	474.8000 IN.	YMRP =	.0000 IN.YO		
BREF =	936.6800 IN.	ZMRP =	375.0000 IN.ZO		
SCALE =	.0405				

PARAMETRIC DATA

BETA =	8.000	BDFLAP =	-11.700
ELEVON =	15.000	RUDDER =	.000
SPDBRK =	25.000	GRDPLN =	.000
LNGRPS =	1.000	LNDGDR =	100.000

SECTION (1)NS GR AFT WAL CPS DEPENDENT VARIABLE CP

MACH (1) = .230 ALPHA (1) = .130

X/LD	.050	.500	.950
X/LW			
.050	.0692	.0243	-.1352
.500	.0518	.0072	-.3550
.950	.0233	.0700	.5017

MACH (1) = .230 ALPHA (2) = 5.350

X/LD	.050	.500	.950
X/LW			
.050	.1937	.1726	-.0474
.500	.1720	.1353	-.2282
.950	.1868	.2680	.1966

MACH (1) = .230 ALPHA (3) = 10.610

X/LD	.050	.500	.950
X/LW			
.050	.3249	.2994	.0403
.500	.2986	.2621	-.1013
.950	.3228	.3941	.1908

MACH (1) = .230 ALPHA (4) = 15.840

X/LD	.050	.500	.950
X/LW			
.050	.4561	.4264	.1618
.500	.4237	.3914	.0376
.950	.4649	.5424	.2369

MACH (1) = .230 ALPHA (5) = 19.010

X/LD	.050	.500	.950
X/LW			
.050	.5278	.5030	.2437
.500	.4977	.4744	.1105
.950	.5337	.6195	.2728

NAAL 737 OA143 ORB/B66-NOSE GEAR AFT WALL CPS (RFCK21) (14 MAY 75)

REFERENCE DATA

SREF =	2690.0000 SQ.FT.	XMRP =	1076.7000 IN.XO		
LREF =	474.8000 IN.	YMRP =	.0000 IN.YO		
BREF =	936.6800 IN.	ZMRP =	375.0000 IN.ZO		
SCALE =	.0405				

PARAMETRIC DATA

BETA =	.000	BDFLAP =	-11.700
ELEVON =	10.000	RUDDER =	.000
SPDBRK =	25.000	GRDPLN =	.000
LNGRPS =	1.000	LNDGDR =	100.000

SECTION (1)NS GR AFT WAL CPS DEPENDENT VARIABLE CP

MACH (1) = .230 ALPHA (1) = .080

X/LD	.050	.500	.950
X/LW			
.050	.0091	-.0124	.1593
.500	.0793	-.0033	-.3921
.950	.0041	-.0221	.0597

MACH (1) = .230 ALPHA (2) = 5.340

X/LD	.050	.500	.950
X/LW			
.050	.1477	.1397	.2058
.500	.1994	.1330	-.2746
.950	.1384	.1231	.0992

MACH (1) = .230 ALPHA (3) = 10.550

X/LD	.050	.500	.950
X/LW			
.050	.2930	.2943	.2804
.500	.3025	.2589	-.1413
.950	.2879	.2797	.1959

MACH (1) = .230 ALPHA (4) = 15.810

X/LD	.050	.500	.950
X/LW			
.050	.4235	.4493	.3605
.500	.4227	.4007	.0283
.950	.4238	.4396	.2928

MACH (1) = .230 ALPHA (5) = 18.980

X/LD	.050	.500	.950
X/LW			
.050	.4981	.5341	.3798
.500	.4986	.4836	.1356
.950	.4967	.5282	.3266

NAAL 737 OA143 ORB/B66-NOSE GEAR AFT WALL CPS (RFCK22) (14 MAY 75)

REFERENCE DATA

SREF =	2690.0000 SQ.FT.	XMRP =	1076.7000 IN.XO		
LREF =	474.8000 IN.	YMRP =	.0000 IN.YO		
BREF =	936.6800 IN.	ZMRP =	375.0000 IN.ZO		
SCALE =	.0405				

PARAMETRIC DATA

BETA =	-4.000	BDFLAP =	-11.700
ELEVON =	10.000	RUDDER =	.000
SPDBRK =	25.000	GRDPLN =	.000
LNGRPS =	1.000	LNDGDR =	100.000

SECTION (1)NS GR AFT WAL CPS DEPENDENT VARIABLE CP

MACH (1) = .230 ALPHA (1) = .090

X/LD	.050	.500	.950
X/LW			
.050	.0121	.0205	.5091
.500	.0541	-.0117	-.4102
.950	.0372	-.0090	-.1610

MACH (1) = .230 ALPHA (2) = 5.300

X/LD	.050	.500	.950
X/LW			
.050	.1611	.1842	.2912
.500	.1673	.1166	-.3000
.950	.1622	.1260	-.0291

MACH (1) = .230 ALPHA (3) = 10.570

X/LD	.050	.500	.950
X/LW			
.050	.2994	.3398	.2909
.500	.2962	.2622	-.1644
.950	.2951	.2600	.0907

MACH (1) = .230 ALPHA (4) = 15.810

X/LD	.050	.500	.950
X/LW			
.050	.4445	.4927	.3023
.500	.4315	.3958	.0185
.950	.4253	.4131	.1987

MACH (1) = .230 ALPHA (5) = 18.980

X/LD	.050	.500	.950
X/LW			
.050	.5241	.5781	.3289
.500	.5078	.4809	.1136
.950	.5113	.5073	.2485

NAAL 737 OA143 ORB/B66-NOSE GEAR AFT WALL CPS (RFCK23) (14 MAY 75)

REFERENCE DATA

SREF =	2890.0000 SQ.FT.	XMRP =	1076.7000 IN.XO		
LREF =	474.8000 IN.	YMRP =	.0000 IN.YO		
BREF =	938.6800 IN.	ZMRP =	375.0000 IN.ZO		
SCALE =	.0405				

PARAMETRIC DATA

BETA =	-8.000	BDFLAP =	-11.700
ELEVON =	10.000	RUDDER =	.000
SPDBRK =	25.000	GRDPLN =	.000
LNGRPS =	1.000	LNDGDR =	100.000

SECTION (1)NS GR AFT WAL CPS DEPENDENT VARIABLE CP

MACH (1) = .230 ALPHA (1) = .100

X/LD	.050	.500	.950
X/LW			
.050	.0159	.0533	.3035
.500	.0321	-.0023	-.3602
.950	.0671	.0240	-.1554

MACH (1) = .230 ALPHA (2) = 5.320

X/LD	.050	.500	.950
X/LW			
.050	.1768	.2422	.2162
.500	.1642	.1274	-.2540
.950	.1956	.1696	-.0490

MACH (1) = .230 ALPHA (3) = 10.590

X/LD	.050	.500	.950
X/LW			
.050	.3115	.3673	.2274
.500	.2901	.2602	-.1280
.950	.3230	.2952	.0370

MACH (1) = .230 ALPHA (4) = 15.850

X/LD	.050	.500	.950
X/LW			
.050	.4498	.5026	.2579
.500	.4196	.3857	-.0007
.950	.4548	.4217	.1387

MACH (1) = .230 ALPHA (5) = 19.010

X/LD	.050	.500	.950
X/LW			
.050	.5210	.5695	.2824
.500	.4938	.4619	.0765
.950	.5271	.4930	.1892

NAAL 737 OA143 ORB/B66-NOSE GEAR AFT WALL CPS (RFCK24) (14 MAY 75)

REFERENCE DATA

SREF =	2690.0000 SQ.FT.	XMRP =	1076.7000 IN.XO		
LREF =	474.8000 IN.	YMRP =	.0000 IN.YO		
BREF =	936.6800 IN.	ZMRP =	375.0000 IN.ZO		
SCALE =	.0405				

PARAMETRIC DATA

BETA =	4.000	BDFLAP =	-11.700
ELEVON =	10.000	RUDDER =	.000
SPDBRK =	25.000	GRDPLN =	.000
LNGRPS =	1.000	LNDGDR =	100.000

SECTION (1)NS GR AFT WAL CPS DEPENDENT VARIABLE CP

MACH (1) = .230 ALPHA (1) = .070

X/LD	.050	.500	.950
X/LW			
.050	.0432	-.0132	-.0887
.500	.0766	.0059	-.3748
.950	.0192	.0152	.3754

MACH (1) = .230 ALPHA (2) = 5.290

X/LD	.050	.500	.950
X/LW			
.050	.1603	.1316	.0193
.500	.1747	.1254	-.2887
.950	.1670	.1811	.3120

MACH (1) = .230 ALPHA (3) = 10.530

X/LD	.050	.500	.950
X/LW			
.050	.2916	.2687	.1806
.500	.3012	.2626	-.1569
.950	.3036	.3428	.2749

MACH (1) = .230 ALPHA (4) = 15.790

X/LD	.050	.500	.950
X/LW			
.050	.4177	.4169	.3070
.500	.4323	.4030	.0305
.950	.4422	.4966	.2913

MACH (1) = .230 ALPHA (5) = 18.950

X/LD	.050	.500	.950
X/LW			
.050	.4981	.5058	.3240
.500	.5098	.4761	.1314
.950	.5259	.5911	.2977

NAAL 737 OA143 ORB/866-NOSE GEAR AFT WALL CPS (RFCK25) (14 MAY 75)

REFERENCE DATA

SREF =	2690.0000 SQ.FT.	XMRP =	1076.7000 IN.XO		
LREF =	474.8000 IN.	YMRP =	.0000 IN.YO		
BREF =	936.6800 IN.	ZMRP =	375.0000 IN.ZO		
SCALE =	.0405				

PARAMETRIC DATA

BETA =	8.000	BDFLAP =	-11.700
ELEVON =	10.000	RUDDER =	.000
SPDBRK =	25.000	GRDPLN =	.000
LNGRPS =	1.000	LNDGDR =	100.000

SECTION (1)NS GR AFT WAL CPS DEPENDENT VARIABLE CP

MACH (1) = .230 ALPHA (1) = .100

X/LD	.050	.500	.950
X/LW			
.050	.0676	.0284	-.1379
.500	.0523	.0065	-.3584
.950	.0236	.0694	.5019

MACH (1) = .230 ALPHA (2) = 5.310

X/LD	.050	.500	.950
X/LW			
.050	.1945	.1733	-.0485
.500	.1717	.1359	-.2237
.950	.1923	.2658	.2138

MACH (1) = .230 ALPHA (3) = 10.550

X/LD	.050	.500	.950
X/LW			
.050	.3225	.3014	.0406
.500	.2936	.2621	-.1027
.950	.3209	.3913	.1925

MACH (1) = .230 ALPHA (4) = 15.830

X/LD	.050	.500	.950
X/LW			
.050	.4556	.4265	.1572
.500	.4196	.3932	.0357
.950	.4602	.5386	.2328

MACH (1) = .230 ALPHA (5) = 18.970

X/LD	.050	.500	.950
X/LW			
.050	.5235	.5033	.2440
.500	.4918	.4726	.1097
.950	.5310	.6152	.2682

NAAL 737 OA143 ORB/B66-NOSE GEAR AFT WALL CPS (RFCK26) (14 MAY 75)

REFERENCE DATA

SREF = 2690.0000 SQ.FT. XMRP = 1076.7000 IN.XO
LREF = 474.8000 IN. YMRP = .0000 IN.YO
BREF = 936.6800 IN. ZMRP = 375.0000 IN.ZO
SCALE = .0405

PARAMETRIC DATA

BETA = 8.000 BDFLAP = -11.700
ELEVON = 10.000 RUDDER = .000
SPDBRK = 25.000 GRDPLN = .000
LNGRPS = .000 LNDGDR = .000

SECTION (1)NS GR AFT WAL CPS DEPENDENT VARIABLE CP

MACH (1) = .230 ALPHA (1) = .070

X/LD	.050	.500	.950
X/LW			
.050	-.1482	-.1482	-.1345
.500	-.1480	-.1482	-.2775
.950	-.1477	-.1493	-.1335

MACH (1) = .230 ALPHA (2) = 5.330

X/LD	.050	.500	.950
X/LW			
.050	-.0353	-.0316	-.0308
.500	-.0367	-.0345	-.2142
.950	-.0356	-.0308	-.0541

MACH (1) = .230 ALPHA (3) = 10.570

X/LD	.050	.500	.950
X/LW			
.050	.0897	.0899	.0795
.500	.0881	.0859	-.1222
.950	.0889	.0870	.0408

MACH (1) = .230 ALPHA (4) = 15.850

X/LD	.050	.500	.950
X/LW			
.050	.2148	.2143	.1930
.500	.2140	.2156	-.0177
.950	.2156	.2156	.1447

MACH (1) = .230 ALPHA (5) = 19.010

X/LD	.050	.500	.950
X/LW			
.050	.2869	.2890	.2659
.500	.2869	.2845	.0525
.950	.2866	.2866	.2080

NAAL 737 OA143 ORB/866-NOSE GEAR AFT WALL CPS (RFCK27) (14 MAY 75)

REFERENCE DATA

SREF =	2690.0000 SQ.FT.	XMRP =	1076.7000 IN.XO		
LREF =	474.8000 IN.	YMRP =	.0000 IN.YO		
BREF =	936.6800 IN.	ZMRP =	375.0000 IN.ZO		
SCALE =	.0405				

PARAMETRIC DATA

BETA =	8.000	BDFLAP =	-11.700
ELEVON =	10.000	RUDDER =	.000
SPDBRK =	25.000	GRDPLN =	.000
LNGRPS =	.000	LNDGDR =	40.000

SECTION (1)NS GR AFT WAL CPS DEPENDENT VARIABLE CP

MACH (1) = .230 ALPHA (1) = .080

X/LD	.050	.500	.950
X/LW			
.050	-.1087	-.1202	-.0902
.500	-.0993	-.1701	-.0958
.950	-.0430	-.1202	.3664

MACH (1) = .230 ALPHA (2) = 5.320

X/LD	.050	.500	.950
X/LW			
.050	.0487	-.0050	.0135
.500	.0232	-.0547	-.0028
.950	.0909	.0336	.4110

MACH (1) = .230 ALPHA (3) = 10.550

X/LD	.050	.500	.950
X/LW			
.050	.1951	.1259	.1251
.500	.1600	.0757	.0996
.950	.2288	.2077	.4968

MACH (1) = .230 ALPHA (4) = 15.820

X/LD	.050	.500	.950
X/LW			
.050	.3360	.2588	.2327
.500	.2958	.2217	.2236
.950	.3653	.3680	.5782

MACH (1) = .230 ALPHA (5) = 18.970

X/LD	.050	.500	.950
X/LW			
.050	.4230	.3382	.3002
.500	.3738	.3275	.3153
.950	.4708	.5011	.5912

NAAL 737 OA143 ORB/B66-NOSE GEAR AFT WALL CPS (RFCK29) (14 MAY 75)

REFERENCE DATA

SREF =	2690.0000 SQ.FT.	XMRP =	1076.7000 IN.XO
LREF =	474.8000 IN.	YMRP =	.0000 IN.YO
BREF =	936.6800 IN.	ZMRP =	375.0000 IN.ZO
SCALE =	.0405		

PARAMETRIC DATA

BETA =	8.000	BDFLAP =	-11.700
ELEVON =	10.000	RUDDER =	.000
SPDBRK =	25.000	GRDPLN =	.000
LNGRPS =	.000	LNDGDR =	80.000

SECTION (1)NS GR AFT WAL CPS DEPENDENT VARIABLE CP

MACH (1) = .230 ALPHA (1) = .090

X/LD	.050	.500	.950
X/LW			
.050	-.0280	-.0433	.0158
.500	-.0326	-.1191	.0504
.950	.0427	-.0773	.4918

MACH (1) = .230 ALPHA (2) = 5.330

X/LD	.050	.500	.950
X/LW			
.050	.1031	.0809	.1114
.500	.1163	.0134	.1554
.950	.2032	.1042	.5589

MACH (1) = .230 ALPHA (3) = 10.560

X/LD	.050	.500	.950
X/LW			
.050	.3127	.2150	.1944
.500	.2688	.1488	.2883
.950	.3678	.2998	.6215

MACH (1) = .230 ALPHA (4) = 15.810

X/LD	.050	.500	.950
X/LW			
.050	.4496	.3485	.2949
.500	.4018	.2871	.4312
.950	.5003	.4621	.6713

MACH (1) = .230 ALPHA (5) = 18.970

X/LD	.050	.500	.950
X/LW			
.050	.5229	.4249	.3575
.500	.4776	.3785	.5005
.950	.5767	.5487	.6907

NAAL 737 OA143 ORB/B66-NOSE GEAR AFT WALL CPS (RFCK30) (14 MAY 75)

REFERENCE DATA

SREF =	2690.0000 SQ.FT.	XMRP =	1076.7000 IN.XO		
LREF =	474.8000 IN.	YMRP =	.0000 IN.YO		
BREF =	936.6800 IN.	ZMRP =	375.0000 IN.ZO		
SCALE =	.0405				

PARAMETRIC DATA

BETA =	.000	BDFLAP =	-11.700
ELEVON =	5.000	RUDDER =	.000
SPDBRK =	25.000	GRDPLN =	.000
LNGRPS =	1.000	LNDGDR =	100.000

SECTION (1)NS GR AFT WAL CPS DEPENDENT VARIABLE CP

MACH (1) = .230 ALPHA (1) = .010

X/LD	.050	.500	.950
X/LW			
.050	.0030	-.0109	.1886
.500	.0679	-.0074	-.3923
.950	.0006	-.0237	-.0296

MACH (1) = .230 ALPHA (2) = 5.240

X/LD	.050	.500	.950
X/LW			
.050	.1416	.1376	.2333
.500	.1960	.1325	-.2787
.950	.1328	.1173	.0836

MACH (1) = .230 ALPHA (3) = 10.470

X/LD	.050	.500	.950
X/LW			
.050	.2923	.2987	.3265
.500	.3033	.2606	-.1514
.950	.2862	.2742	.1906

MACH (1) = .230 ALPHA (4) = 15.730

X/LD	.050	.500	.950
X/LW			
.050	.4234	.4491	.4067
.500	.4193	.4033	.0086
.950	.4202	.4314	.3027

MACH (1) = .230 ALPHA (5) = 18.890

X/LD	.050	.500	.950
X/LW			
.050	.4933	.5294	.4274
.500	.4954	.4844	.1137
.950	.4957	.5200	.3487

NAAL 737 OA143 ORB/B66-NOSE GEAR AFT WALL CPS (RFCK31) (14 MAY 75)

REFERENCE DATA

SREF =	2690.0000 SQ.FT.	XMRP =	1076.7000 IN.XO
LREF =	474.8000 IN.	YMRP =	.0000 IN.YO
BREF =	936.6800 IN.	ZMRP =	375.0000 IN.ZO
SCALE =	.0405		

PARAMETRIC DATA

BETA =	-4.000	BDFLAP =	-11.700
ELEVON =	5.000	RUDDER =	.000
SPDBRK =	25.000	GRDPLN =	.000
LNGRPS =	1.000	LNDGDR =	100.000

SECTION (1)NS GR AFT WAL CPS DEPENDENT VARIABLE CP

MACH (1) = .230 ALPHA (1) = .000

X/LD	.050	.500	.950
X/LW			
.050	.0027	.0253	.5319
.500	.0352	-.0178	-.4028
.950	.0365	-.0076	-.1638

MACH (1) = .230 ALPHA (2) = 5.250

X/LD	.050	.500	.950
X/LW			
.050	.1561	.1930	.4407
.500	.1563	.1132	-.3015
.950	.1654	.1274	-.0387

MACH (1) = .230 ALPHA (3) = 10.480

X/LD	.050	.500	.950
X/LW			
.050	.2954	.3481	.3607
.500	.2919	.2593	-.1735
.950	.2885	.2588	.0800

MACH (1) = .230 ALPHA (4) = 15.760

X/LD	.050	.500	.950
X/LW			
.050	.4349	.4942	.3570
.500	.4282	.4037	.0086
.950	.4266	.4079	.2072

MACH (1) = .230 ALPHA (5) = 18.910

X/LD	.050	.500	.950
X/LW			
.050	.5204	.5753	.3666
.500	.5065	.4812	.1009
.950	.5124	.5044	.2594

NAAL 737 OA143 ORB/B66-NOSE GEAR AFT WALL CPS (RFCK32) (14 MAY 75)

REFERENCE DATA

SREF =	2690.0000 SQ.FT.	XMRP =	1076.7000 IN.XO		
LREF =	474.8000 IN.	YMRP =	.0000 IN.YO		
BREF =	936.6800 IN.	ZMRP =	375.0000 IN.ZO		
SCALE =	.0405				

PARAMETRIC DATA

BETA =	-8.000	BDFLAP =	-11.700
ELEVON =	5.000	RUDDER =	.000
SPDBRK =	25.000	GRDPLN =	.000
LNGRPS =	1.000	LNDGDR =	100.000

SECTION (1)NS GR AFT WAL CPS DEPENDENT VARIABLE CP

MACH (1) = .230 ALPHA (1) = .050

X/LD	.050	.500	.950
X/LW			
.050	.0137	.0588	.5034
.500	.0285	-.0036	-.3598
.950	.0674	.0290	-.1546

MACH (1) = .230 ALPHA (2) = 5.250

X/LD	.050	.500	.950
X/LW			
.050	.1695	.2506	.2899
.500	.1593	.1273	-.2493
.950	.1928	.1692	-.0511

MACH (1) = .230 ALPHA (3) = 10.520

X/LD	.050	.500	.950
X/LW			
.050	.3079	.3623	.2663
.500	.2866	.2559	-.1432
.950	.3188	.2954	.0300

MACH (1) = .230 ALPHA (4) = 15.790

X/LD	.050	.500	.950
X/LW			
.050	.4513	.5041	.2905
.500	.4178	.3875	-.0042
.950	.4556	.4202	.1296

MACH (1) = .230 ALPHA (5) = 18.960

X/LD	.050	.500	.950
X/LW			
.050	.5191	.5712	.3176
.500	.4933	.4617	.0625
.950	.5239	.4928	.1817

NAAL 737 OA143 ORB/B66-NOSE GEAR AFT WALL CPS (RFCK33) (14 MAY 75)

REFERENCE DATA

SREF =	2690.0000 SQ.FT.	XMRP =	1076.7000 IN.XO		
LREF =	474.8000 IN.	YMRP =	.0000 IN.YO		
BREF =	936.6800 IN.	ZMRP =	375.0000 IN.ZO		
SCALE =	.0405				

PARAMETRIC DATA

BETA =	4.000	BDFLAP =	-11.700
ELEVON =	5.000	RUDDER =	.000
SPDBRK =	25.000	GRDPLN =	.000
LNGRPS =	1.000	LNDGDR =	100.000

SECTION (1)NS GR AFT WAL CPS DEPENDENT VARIABLE CP

MACH (1) = .230 ALPHA (1) = .010

X/LD	.050	.500	.950
X/LW			
.050	.0415	-.0104	-.0961
.500	.0712	-.0026	-.3852
.950	.0192	.0143	.3420

MACH (1) = .230 ALPHA (2) = 5.230

X/LD	.050	.500	.950
X/LW			
.050	.1583	.1307	.0228
.500	.1696	.1226	-.2936
.950	.1618	.1757	.2688

MACH (1) = .230 ALPHA (3) = 10.470

X/LD	.050	.500	.950
X/LW			
.050	.2899	.2637	.1861
.500	.2928	.2621	-.1576
.950	.3043	.3243	.2536

MACH (1) = .230 ALPHA (4) = 15.750

X/LD	.050	.500	.950
X/LW			
.050	.4141	.4179	.3216
.500	.4264	.4021	.0268
.950	.4384	.4664	.2794

MACH (1) = .230 ALPHA (5) = 18.910

X/LD	.050	.500	.950
X/LW			
.050	.5047	.5173	.3593
.500	.5087	.4802	.1286
.950	.5173	.5514	.2831

NAAL 737 OA143 ORB/B66-NOSE GEAR AFT WALL CPS (RFCK34) (14 MAY 75)

REFERENCE DATA

SREF =	2690.0000 SQ.FT.	XMRP =	1076.7000 IN.XO		
LREF =	474.8000 IN.	YMRP =	.0000 IN.YO		
BREF =	936.6800 IN.	ZMRP =	375.0000 IN.ZO		
SCALE =	.0405				

PARAMETRIC DATA

BETA =	8.000	BDFLAP =	-11.700
ELEVON =	5.000	RUDDER =	.000
SPDBRK =	25.000	GRDPLN =	.000
LNGRPS =	1.000	LNDGDR =	100.000

SECTION (1)NS GR AFT WAL CPS DEPENDENT VARIABLE CP

MACH (1) = .230 ALPHA (1) = -4.170

X/LD	.050	.500	.950
X/LW			
.050	-.0349	-.0834	-.2415
.500	-.0416	-.0896	-.4252
.950	-.0920	-.0636	.4520

MACH (1) = .230 ALPHA (2) = -2.060

X/LD	.050	.500	.950
X/LW			
.050	.0162	-.0302	-.1858
.500	-.0009	-.0471	-.4026
.950	-.0348	.0000	.4802

MACH (1) = .230 ALPHA (3) = .020

X/LD	.050	.500	.950
X/LW			
.050	.0630	.0260	-.1422
.500	.0400	-.0012	-.3756
.950	.0263	.0617	.4430

MACH (1) = .230 ALPHA (4) = 2.090

X/LD	.050	.500	.950
X/LW			
.050	.1109	.0846	-.1094
.500	.0889	.0513	-.3346
.950	.0840	.1345	.3195

MACH (1) = .230 ALPHA (5) = 4.170

X/LD	.050	.500	.950
X/LW			
.050	.1688	.1460	-.0659
.500	.1398	.1036	-.2500
.950	.1487	.2025	.1608

MACH (1) = .230 ALPHA (6) = 6.270

X/LD	.050	.500	.950
X/LW			
.050	.2230	.1986	-.0389
.500	.1878	.1556	-.2114
.950	.2036	.2517	.1472

MACH (1) = .230 ALPHA (7) = 8.370

X/LD	.050	.500	.950
X/LW			
.050	.2705	.2483	.0000
.500	.2374	.2067	-.1670
.950	.2534	.2947	.1374

NAAL 737 OA143 ORB/B66-NOSE GEAR AFT WALL CPS (RFCK34)

SECTION (1)NS GR AFT WAL CPS DEPENDENT VARIABLE CP

MACH (1) = .230 ALPHA (8) = 10.470

X/LD	.050	.500	.950
X/LW			
.050	.3256	.3024	.0349
.500	.2960	.2596	-.1114
.950	.3069	.3470	.1470

MACH (1) = .230 ALPHA (9) = 12.570

X/LD	.050	.500	.950
X/LW			
.050	.3766	.3550	.0795
.500	.3452	.3124	-.0499
.950	.3654	.4041	.1509

NAAL 737 OA143 ORB/B66-NOSE GEAR AFT WALL CPS (RFCK34)

SECTION (1)NS GR AFT WAL CPS DEPENDENT VARIABLE CP

MACH (1) = .230 ALPHA (8) = 10.470

X/LD	.050	.500	.950
X/LW			
.050	.3256	.3024	.0349
.500	.2960	.2596	-.1114
.950	.3069	.3470	.1470

MACH (1) = .230 ALPHA (9) = 12.570

X/LD	.050	.500	.950
X/LW			
.050	.3766	.3550	.0795
.500	.3452	.3124	-.0499
.950	.3654	.4041	.1509

MACH (1) = .230 ALPHA (10) = 14.650

X/LD	.050	.500	.950
X/LW			
.050	.4334	.4075	.1311
.500	.3977	.3654	.0035
.950	.4161	.4552	.1714

MACH (1) = .230 ALPHA (11) = 16.770

X/LD	.050	.500	.950
X/LW			
.050	.4815	.4585	.1911
.500	.4484	.4211	.0563
.950	.4682	.5066	.1914

MACH (1) = .230 ALPHA (12) = 18.880

X/LD	.050	.500	.950
X/LW			
.050	.5285	.5022	.2491
.500	.4966	.4718	.0972
.950	.5128	.5580	.2199

NAAL 737 OA143 OR8/B65-NOSE GEAR AFT WALL CPS (RFCK35) (14 MAY 75)

REFERENCE DATA

SREF = 2690.0000 SQ.FT. XMRP = 1076.7000 IN.XO
LREF = 474.8000 IN. YMRP = .0000 IN.YO
BREF = 936.6800 IN. ZMRP = 375.0000 IN.ZO
SCALE = .0405

PARAMETRIC DATA

BETA = .000 BDFLAP = -11.700
ELEVON = 5.000 RUDDER = .000
SPDBRK = 25.000 GRDPLN = .000
LNGRPS = 1.000 LNDGDR = 100.000

SECTION (1)NS GR AFT WAL CPS DEPENDENT VARIABLE CP

MACH (1) = .230 ALPHA (1) = .030

X/LD	.050	.500	.950
X/LW			
.050	.0057	-.0144	.2031
.500	.0741	-.0055	-.3922
.950	.0027	-.0243	-.0377

MACH (1) = .230 ALPHA (2) = 5.230

X/LD	.050	.500	.950
X/LW			
.050	.1399	.1372	.2487
.500	.1933	.1303	-.2855
.950	.1367	.1217	.0728

MACH (1) = .230 ALPHA (3) = 10.470

X/LD	.050	.500	.950
X/LW			
.050	.2902	.2985	.3364
.500	.3027	.2653	-.1556
.950	.2864	.2755	.2111

MACH (1) = .230 ALPHA (4) = 15.750

X/LD	.050	.500	.950
X/LW			
.050	.4192	.4470	.4117
.500	.4173	.4042	.0110
.950	.4213	.4334	.3148

MACH (1) = .230 ALPHA (5) = 18.810

X/LD	.050	.500	.950
X/LW			
.050	.4983	.5331	.4394
.500	.4956	.4857	.1206
.950	.4988	.5210	.3609

NAAL 737 OA143 ORB/865-NOSE GEAR AFT WALL CPS (RFCK36) (14 MAY 75)

REFERENCE DATA

SREF =	2690.0000 SQ.FT.	XMRP =	1076.7000 IN.XO		
LREF =	474.8000 IN.	YMRP =	.0000 IN.YO		
BREF =	936.6800 IN.	ZMRP =	375.0000 IN.ZO		
SCALE =	.0405				

PARAMETRIC DATA

BETA =	-4.000	BDFLAP =	-11.700
ELEVON =	5.000	RUDDER =	.000
SPDBRK =	25.000	GRDPLN =	.000
LNGRPS =	1.000	LNDGDR =	100.000

SECTION (1)NS GR AFT WAL CPS DEPENDENT VARIABLE CF

MACH (1) = .230 ALPHA (1) = .000

X/LD	.050	.500	.950
X/LW			
.050	.0038	.0253	.5575
.500	.0376	-.0227	-.4084
.950	.0393	-.0103	-.1629

MACH (1) = .230 ALPHA (2) = 5.260

X/LD	.050	.500	.950
X/LW			
.050	.1546	.1994	.4527
.500	.1583	.1129	-.3019
.950	.1602	.1261	-.0300

MACH (1) = .230 ALPHA (3) = 10.490

X/LD	.050	.500	.950
X/LW			
.050	.2964	.3474	.3562
.500	.2908	.2604	-.1738
.950	.2868	.2583	.0801

MACH (1) = .230 ALPHA (4) = 15.770

X/LD	.050	.500	.950
X/LW			
.050	.4377	.4922	.3560
.500	.4289	.3975	-.0039
.950	.4254	.4050	.2180

MACH (1) = .230 ALPHA (5) = 18.920

X/LD	.050	.500	.950
X/LW			
.050	.5230	.5904	.3693
.500	.5060	.4813	.0974
.950	.5044	.4996	.2633

NAAL 737 OA143 ORB/B65-NOSE GEAR AFT WALL CPS (RFCK37) (14 MAY 75)

REFERENCE DATA

SREF =	2690.0000 SQ.FT.	XMRP =	1076.7000 IN.XO		
LREF =	474.8000 IN.	YMRP =	.0000 IN.YO		
BREF =	936.6800 IN.	ZMRP =	375.0000 IN.ZO		
SCALE =	.0405				

PARAMETRIC DATA

BETA =	-8.000	BDFLAP =	-11.700
ELEVON =	5.000	RUDDER =	.000
SPDBRK =	25.000	GRDPLN =	.000
LNGRPS =	1.000	LNDGDR =	100.000

SECTION (1)NS GR AFT WAL CPS DEPENDENT VARIABLE CP

MACH (1) = .230 ALPHA (1) = .030

X/LD	.050	.500	.950
X/LW			
.050	.0137	.0548	.5467
.500	.0277	-.0044	-.3460
.950	.0677	.0253	-.1528

MACH (1) = .230 ALPHA (2) = 5.250

X/LD	.050	.500	.950
X/LW			
.050	.1742	.2529	.3144
.500	.1595	.1267	-.2310
.950	.1900	.1638	-.0584

MACH (1) = .230 ALPHA (3) = 10.510

X/LD	.050	.500	.950
X/LW			
.050	.3101	.3662	.2908
.500	.2898	.2582	-.1335
.950	.3186	.2948	.0403

MACH (1) = .230 ALPHA (4) = 15.790

X/LD	.050	.500	.950
X/LW			
.050	.4502	.5047	.3008
.500	.4187	.3854	-.0098
.950	.4526	.4217	.1291

MACH (1) = .230 ALPHA (5) = 18.950

X/LD	.050	.500	.950
X/LW			
.050	.5206	.5780	.3305
.500	.4929	.4660	.0610
.950	.5281	.4937	.1873

NAAL 737 OA143 ORB/B65-NOSE GEAR AFT WALL CPS (RFCK38) (14 MAY 75)

REFERENCE DATA

SREF =	2690.0000 SQ.FT.	XMRP =	1076.7000 IN.XO
LREF =	474.8000 IN.	YMRP =	.0000 IN.YO
BREF =	936.6800 IN.	ZMRP =	375.0000 IN.ZO
SCALE =	.0405		

PARAMETRIC DATA

BETA =	4.000	BDFLAP =	-11.700
ELEVON =	5.000	RUDDER =	.000
SPDBRK =	25.000	GRDPLN =	.000
LNGRPS =	1.000	LNDGDR =	100.000

SECTION (1)NS GR AFT WAL CPS DEPENDENT VARIABLE CP

MACH (1) = .230 ALPHA (1) = .010

X/LD	.050	.500	.950
X/LW			
.050	.0403	-.0106	-.0903
.500	.0725	.0011	-.3813
.950	.0210	.0124	.3193

MACH (1) = .230 ALPHA (2) = 5.240

X/LD	.050	.500	.950
X/LW			
.050	.1559	.1306	.0269
.500	.1723	.1209	-.2945
.950	.1669	.1760	.2852

MACH (1) = .230 ALPHA (3) = 10.090

X/LD	.050	.500	.950
X/LW			
.050	.5073	.5182	.3674
.500	.5094	.4856	.1294
.950	.5188	.5527	.2884

MACH (1) = .230 ALPHA (4) = 10.460

X/LD	.050	.500	.950
X/LW			
.050	.2864	.2677	.1816
.500	.2950	.2640	-.1589
.950	.3024	.3270	.2495

MACH (1) = .230 ALPHA (5) = 15.730

X/LD	.050	.500	.950
X/LW			
.050	.4170	.4164	.3371
.500	.4258	.4007	.0300
.950	.4391	.4698	.2810

NAAL 737 OA143 ORB/B65-NOSE GEAR AFT WALL CPS (RFCK39) (14 MAY 75)

REFERENCE DATA

SREF =	2690.0000 SQ.FT.	XMRP =	1076.7000 IN.XO
LREF =	474.8000 IN.	YMRP =	.0000 IN.YO
BREF =	936.6800 IN.	ZMRP =	375.0000 IN.ZO
SCALE =	.0405		

PARAMETRIC DATA

BETA =	8.000	BDFLAP =	-11.700
ELEVON =	5.000	RUDDER =	.000
SPDBRK =	25.000	GRDPLN =	.000
LNGRPS =	1.000	LNDGDR =	100.000

SECTION (1)NS GR AFT WAL CPS DEPENDENT VARIABLE CP

MACH (1) = .230 ALPHA (1) = .020

X/LD	.050	.500	.950
X/LW			
.050	.0629	.0288	-.1430
.500	.0414	-.0004	-.3738
.950	.0218	.0632	.4662

MACH (1) = .230 ALPHA (2) = 5.250

X/LD	.050	.500	.950
X/LW			
.050	.1926	.1712	-.0521
.500	.1595	.1284	-.2247
.950	.1782	.2300	.1520

MACH (1) = .230 ALPHA (3) = 10.460

X/LD	.050	.500	.950
X/LW			
.050	.3241	.3033	.0380
.500	.2943	.2559	-.1133
.950	.3095	.3460	.1435

MACH (1) = .230 ALPHA (4) = 15.740

X/LD	.050	.500	.950
X/LW			
.050	.4598	.4323	.1625
.500	.4240	.3923	.0279
.950	.4408	.4806	.1844

MACH (1) = .230 ALPHA (5) = 18.890

X/LD	.050	.500	.950
X/LW			
.050	.5312	.5040	.2471
.500	.4973	.4712	.0999
.950	.5141	.5555	.2202

NAAL 737 OA143 ORB/B67-NOSE GEAR AFT WALL CPS (RFCK56) (14 MAY 75)

REFERENCE DATA

SREF =	2690.0000 SQ.FT.	XMRP =	1076.7000 IN.XO
LREF =	474.8000 IN.	YMRP =	.0000 IN.YO
BREF =	936.6800 IN.	ZMRP =	375.0000 IN.ZO
SCALE =	.0405		

PARAMETRIC DATA

BETA =	.000	BDFLAP =	-11.700
ELEVON =	5.000	RUDDER =	.000
SPDBRK =	25.000	GRDPLN =	.000
LNGRPS =	1.000	LNDGDR =	100.000

SECTION (1)NS GR AFT WAL CPS DEPENDENT VARIABLE CP

MACH (1) = .230 ALPHA (1) = -4.160

X/LD	.050	.500	.950
X/LW			
.050	-.0944	-.1212	.1672
.500	-.0216	-.1027	-.4480
.950	-.0925	-.1247	-.0537

MACH (1) = .230 ALPHA (2) = -2.080

X/LD	.050	.500	.950
X/LW			
.050	-.0448	-.0684	.1850
.500	.0218	-.0547	-.4272
.950	-.0493	-.0792	-.0289

MACH (1) = .230 ALPHA (3) = .020

X/LD	.050	.500	.950
X/LW			
.050	.0025	-.0133	.2067
.500	.0748	-.0034	-.3906
.950	.0011	-.0254	.0336

MACH (1) = .230 ALPHA (4) = 2.110

X/LD	.050	.500	.950
X/LW			
.050	.0604	.0448	.1992
.500	.1253	.0526	-.3474
.950	.0534	.0322	.0419

MACH (1) = .230 ALPHA (5) = 4.200

X/LD	.050	.500	.950
X/LW			
.050	.1179	.1101	.2220
.500	.1718	.1051	-.3037
.950	.1077	.0868	.0587

MACH (1) = .230 ALPHA (6) = 6.290

X/LD	.050	.500	.950
X/LW			
.050	.1711	.1708	.2764
.500	.2181	.1604	-.2594
.950	.1628	.1472	.1041

MACH (1) = .230 ALPHA (7) = 8.400

X/LD	.050	.500	.950
X/LW			
.050	.2282	.2349	.3210
.500	.2629	.2088	-.2023
.950	.2200	.2090	.1431

NAAL 737 OA143 ORB/B67-NOSE GEAR AFT WALL CPS (RFCK56)

SECTION (1)NS GR AFT WAL CPS DEPENDENT VARIABLE CP

MACH (1) = .230 ALPHA (8) = 10.490

X/LD	.050	.500	.950
X/LW			
.050	.2905	.2996	.3407
.500	.2983	.2627	-.1513
.950	.2841	.2739	.2112

MACH (1) = .230 ALPHA (9) = 12.590

X/LD	.050	.500	.950
X/LW			
.050	.3451	.3612	.3718
.500	.3459	.3184	-.0915
.950	.3422	.3379	.2463

MACH (1) = .230 ALPHA (10) = 14.700

X/LD	.050	.500	.950
X/LW			
.050	.3977	.4153	.3942
.500	.3934	.3736	-.0251
.950	.3947	.3995	.2902

MACH (1) = .230 ALPHA (11) = 16.800

X/LD	.050	.500	.950
X/LW			
.050	.4485	.4798	.4264
.500	.4459	.4317	.0499
.950	.4456	.4616	.3125

MACH (1) = .230 ALPHA (12) = 18.910

X/LD	.050	.500	.950
X/LW			
.050	.4940	.5304	.4314
.500	.4921	.4838	.1293
.950	.4950	.5153	.3441

NAAL 737 OA143 ORB/B67-NOSE GEAR AFT WALL CPS (RFCK60) (14 MAY 75)

REFERENCE DATA

SREF = 2690.0000 SQ.FT. XMRP = 1076.7000 IN.XO
LREF = 474.8000 IN. YMRP = .0000 IN.YO
BREF = 936.6800 IN. ZMRP = 375.0000 IN.ZO
SCALE = .0405

PARAMETRIC DATA

BETA = 8.000 BDFLAP = -11.700
ELEVON = 5.000 RUDDER = .000
SPDBRK = 25.000 GRDPLN = .000
LNGRPS = 1.000 LNDGDR = 100.000

SECTION (1)NS GR AFT WAL CPS DEPENDENT VARIABLE CP

MACH (1) = .230 ALPHA (1) = -4.130

X/LD	.050	.500	.950
X/LW			
.050	-.0321	-.0788	-.2382
.500	-.0460	-.0868	-.4076
.950	-.0984	-.0780	.4798

MACH (1) = .230 ALPHA (2) = -2.050

X/LD	.050	.500	.950
X/LW			
.050	.0153	-.0297	-.1829
.500	-.0017	-.0444	-.3954
.950	-.0380	-.0093	.4914

MACH (1) = .230 ALPHA (3) = .020

X/LD	.050	.500	.950
X/LW			
.050	.0635	.0272	-.1378
.500	.0404	-.0009	-.3717
.950	.0197	.0570	.4759

MACH (1) = .230 ALPHA (4) = 2.120

X/LD	.050	.500	.950
X/LW			
.050	.1122	.0849	-.1043
.500	.0851	.0502	-.3359
.950	.0865	.1292	.3506

MACH (1) = .230 ALPHA (5) = 4.180

X/LD	.050	.500	.950
X/LW			
.050	.1442	-.0649	.1057
.500	.1646	-.9557	.1702
.950	.1409	.1498	.2070

MACH (1) = .230 ALPHA (6) = 6.290

X/LD	.050	.500	.950
X/LW			
.050	.1964	-.0338	.1575
.500	.2173	-.9632	.1499
.950	.1857	.2020	.2522

MACH (1) = .230 ALPHA (7) = 8.380

X/LD	.050	.500	.950
X/LW			
.050	.2468	.0006	.2064
.500	.2679	-.9545	.1496
.950	.2374	.2561	.2989

NAAL 737 OA143 ORB/B67-NOSE GEAR AFT WALL CPS (RFCK60)

SECTION (1)NS GR AFT WAL CPS · DEPENDENT VARIABLE CP

MACH (1) = .230 ALPHA (8) = 9.020

X/LD	.050	.500	.950
X/LW			
.050	.4808	.4548	.1898
.500	.4494	.4194	.0595
.950	.4687	.5071	.1986

MACH (1) = .230 ALPHA (9) = 10.480

X/LD	.050	.500	.950
X/LW			
.050	.3207	.2982	.0390
.500	.2936	.2559	-.1067
.950	.3118	.3520	.1499

MACH (1) = .230 ALPHA (10) = 12.590

X/LD	.050	.500	.950
X/LW			
.050	.3773	.3516	.0814
.500	.3468	.3096	-.0487
.950	.3658	.4073	.1592

MACH (1) = .230 ALPHA (11) = 14.680

X/LD	.050	.500	.950
X/LW			
.050	.4351	.4046	.1343
.500	.3971	.3658	.0057
.950	.4182	.4584	.1800

MACH (1) = .230 ALPHA (12) = 18.890

X/LD	.050	.500	.950
X/LW			
.050	.5283	.5026	.2430
.500	.4969	.4734	.0981
.950	.5173	.5540	.2205

NAAL 737 OA143 ORB/B66-NOSE GEAR LT SDWALL CPS (RFCL01) (14 MAY 75)

REFERENCE DATA

SREF = 2690.0000 SQ.FT. XMRP = 1076.7000 IN.XO
LREF = 474.8000 IN. YMRP = .0000 IN.YO
BREF = 936.6800 IN. ZMRP = 375.0000 IN.ZO
SCALE = .4050

PARAMETRIC DATA

BETA = .000 BDFLAP = -11.700
ELEVON = 5.000 RUDDER = .000
SPDBRK = 25.000 GRDPLN = 1.000
LNGRPS = 1.000 LNDGDR = 100.000

SECTION (1)NS GR LT SWAL CPS DEPENDENT VARIABLE CP

MACH (1) = .200 ALPHA (1) = .010

X/L	.050	.250	.500	.750	.950
X/LD					
.050	.0107	-.0044	-.0581	-.0404	.0827
.500	-.0007	-.0517	-.0769	-.0770	-.0334
.950	.0229	.1901	-.0506	-.0171	.0376

MACH (1) = .200 ALPHA (2) = 5.380

X/L	.050	.250	.500	.750	.950
X/LD					
.050	.1414	.1300	.0776	.0926	.2022
.500	.1344	.0907	.0651	.0648	.1117
.950	.1660	.2924	.0853	.1342	.1771

MACH (1) = .200 ALPHA (3) = 10.710

X/L	.050	.250	.500	.750	.950
X/LD					
.050	.2771	.2566	.2238	.2398	.3244
.500	.2737	.2322	.2281	.2184	.2846
.950	.3036	.3853	.2328	.3030	.3037

MACH (1) = .200 ALPHA (4) = 16.140

X/L	.050	.250	.500	.750	.950
X/LD					
.050	.4094	.3935	.3792	.3917	.4423
.500	.4014	.3765	.3838	.3741	.4181
.950	.4344	.5228	.3888	.5073	.3969

MACH (1) = .200 ALPHA (5) = 19.380

X/L	.050	.250	.500	.750	.950
X/LD					
.050	.4831	.4728	.4653	.4745	.5109
.500	.4748	.4613	.4633	.4651	.4985
.950	.5088	.6003	.4791	.6157	.4466

NAAL 737 OA143 ORB/B66-NOSE GEAR LT SDWALL CPS (RFCL02) (14 MAY 75)

REFERENCE DATA

SREF =	2690.0000 SQ.FT.	XMRP =	1076.7000 IN.XO		
LREF =	474.8000 IN.	YMRP =	.0000 IN.YO		
BREF =	936.6800 IN.	ZMRP =	375.0000 IN.ZO		
SCALE =	.4050				

PARAMETRIC DATA

BETA =	-4.000	BDFLAP =	-11.700
ELEVON =	5.000	RUDDER =	.000
SPDBRK =	25.000	GRDPLN =	1.000
LNGRPS =	1.000	LNDGDR =	100.000

SECTION (1)NS GR LT SWAL CPS DEPENDENT VARIABLE CP

MACH (1) = .200 ALPHA (1) = .010

X/L	.050	.250	.500	.750	.950
X/LD					
.050	.0053	-.0345	-.0576	-.0310	.0947
.500	-.0033	-.0617	-.0709	-.0692	-.0104
.950	.0346	-.0373	-.0604	-.0287	-.0035

MACH (1) = .200 ALPHA (2) = 5.370

X/L	.050	.250	.500	.750	.950
X/LD					
.050	.1323	.1014	.0789	.1044	.2101
.500	.1216	.0715	.0658	.0691	.1236
.950	.1626	.1485	.0769	.1160	.1318

MACH (1) = .200 ALPHA (3) = 10.760

X/L	.050	.250	.500	.750	.950
X/LD					
.050	.2703	.2411	.2216	.2529	.3307
.500	.2612	.2166	.2122	.2226	.2565
.950	.3035	.3753	.2270	.2789	.2483

MACH (1) = .200 ALPHA (4) = 16.150

X/L	.050	.250	.500	.750	.950
X/LD					
.050	.4046	.3791	.3744	.3931	.4537
.500	.3920	.3652	.3652	.3726	.4172
.950	.4324	.5043	.3840	.4488	.3590

MACH (1) = .200 ALPHA (5) = 19.360

X/L	.050	.250	.500	.750	.950
X/LD					
.050	.4820	.4641	.4658	.4799	.5394
.500	.4648	.4529	.4552	.4569	.5066
.950	.5058	.5775	.4668	.5537	.4169

NAAL 737 OA143 ORB/B66-NOSE GEAR LT SDWALL CPS (RFCL03) (14 MAY 75)

REFERENCE DATA

SREF =	2690.0000 SQ.FT.	XMRP =	1076.7000 IN.XO		
LREF =	474.8000 IN.	YMRP =	.0000 IN.YO		
BREF =	936.6800 IN.	ZMRP =	375.0000 IN.ZO		
SCALE =	.4050				

PARAMETRIC DATA

BETA =	-8.000	BDFLAP =	-11.700
ELEVON =	5.000	RUDDER =	.000
SPDBRK =	25.000	GRDPLN =	1.000
LNGRPS =	1.000	LNDGDR =	100.000

SECTION (1)NS GR LT SWAL CPS DEPENDENT VARIABLE CP

MACH (1) = .200 ALPHA (1) = .030

X/L	.050	.250	.500	.750	.950
X/LD					
.050	.0046	-.0471	-.0688	-.0350	.1169
.500	-.0220	-.0719	-.0804	-.0788	.0411
.950	.0262	-.0678	-.0831	-.0549	-.0818

MACH (1) = .200 ALPHA (2) = 5.380

X/L	.050	.250	.500	.750	.950
X/LD					
.050	.1349	.0879	.0943	.1099	.2317
.500	.1040	.0818	.0617	.0687	.1825
.950	.1392	.0610	.0617	.0924	.0278

MACH (1) = .200 ALPHA (3) = 10.760

X/L	.050	.250	.500	.750	.950
X/LD					
.050	.2629	.2222	.2439	.2562	.3511
.500	.2305	.2218	.2091	.2201	.3150
.950	.2529	.2078	.2165	.2398	.1462

MACH (1) = .200 ALPHA (4) = 16.170

X/L	.050	.250	.500	.750	.950
X/LD					
.050	.3886	.3548	.3879	.4095	.4794
.500	.3582	.3605	.3502	.3636	.4410
.950	.3719	.3792	.3735	.4115	.2822

MACH (1) = .200 ALPHA (5) = 19.400

X/L	.050	.250	.500	.750	.950
X/LD					
.050	.4654	.4375	.4664	.4868	.5514
.500	.4399	.4419	.4352	.4448	.5113
.950	.4521	.5085	.4618	.5175	.3724

NAAL 737 OA143 ORB/B66-NOSE GEAR LT SDWALL CPS (RFCL04) (14 MAY 75)

REFERENCE DATA

SREF = 2690.0000 SQ.FT. XMRP = 1076.7000 IN.XO
LREF = 474.8000 IN. YMRP = .0000 IN.YO
BREF = 936.6800 IN. ZMRP = 375.0000 IN.ZO
SCALE = .4050

PARAMETRIC DATA

BETA = 4.000 BDFLAP = -11.700
ELEVON = 5.000 RUDDER = .000
SPDBRK = 25.000 GRDPLN = 1.000
LNGRPS = 1.000 LNDGDR = 100.000

SECTION (1)NS GR LT SWAL CPS DEPENDENT VARIABLE CP

MACH (1) = .200 ALPHA (1) = .000

X/L	.050	.250	.500	.750	.950
X/LD					
.050	.0164	-.0017	-.0562	-.0575	.0791
.500	.0023	-.0301	-.0643	-.0747	.0265
.950	.0453	.2128	-.0389	.0219	.1035

MACH (1) = .200 ALPHA (2) = 5.340

X/L	.050	.250	.500	.750	.950
X/LD					
.050	.1379	.1224	.0807	.0774	.2008
.500	.1318	.0965	.0753	.0688	.1727
.950	.1698	.3085	.1005	.2146	.2180

MACH (1) = .200 ALPHA (3) = 10.730

X/L	.050	.250	.500	.750	.950
X/LD					
.050	.2719	.2552	.2307	.2213	.3338
.500	.2726	.2344	.2207	.2193	.3207
.950	.3135	.4481	.2528	.4165	.2970

MACH (1) = .200 ALPHA (4) = 16.140

X/L	.050	.250	.500	.750	.950
X/LD					
.050	.4055	.3888	.3952	.3744	.4653
.500	.4091	.3748	.3808	.3691	.4572
.950	.4544	.5783	.4081	.5910	.3943

MACH (1) = .200 ALPHA (5) = 19.370

X/L	.050	.250	.500	.750	.950
X/LD					
.050	.4847	.4642	.4791	.4621	.5479
.500	.4890	.4602	.4645	.4582	.5440
.950	.5320	.6341	.4903	.6688	.4511

NAAL 737 OA143 ORB/B66-NOSE GEAR LT SDWALL CPS (RFCL05) (14 MAY 75)

REFERENCE DATA

SREF = 2690.0000 SQ.FT. XMRP = 1076.7000 IN.XO
LREF = 474.8000 IN. YMRP = .0000 IN.YO
BREF = 936.6800 IN. ZMRP = 375.0000 IN.ZO
SCALE = .4050

PARAMETRIC DATA

BETA = 8.000 BDFLAP = -11.700
ELEVON = 5.000 RUDDER = .000
SPDBRK = 25.000 GRDPLN = 1.000
LNGRPS = 1.000 LNDGDR = 100.000

SECTION (1)NS GR LT SWAL CPS DEPENDENT VARIABLE CP

MACH (1) = .200 ALPHA (1) = .030

X/L	.050	.250	.500	.750	.950
X/LD					
.050	.0117	-.0236	-.0547	-.0792	.0716
.500	.0026	-.0503	-.0669	-.0779	.0578
.950	.0583	.2661	-.0205	.1716	.0482

MACH (1) = .200 ALPHA (2) = 5.360

X/L	.050	.250	.500	.750	.950
X/LD					
.050	.1395	.0843	.1159	.0721	.2182
.500	.1519	.0786	.0853	.0880	.2096
.950	.1839	.3853	.1529	.3774	.1494

MACH (1) = .200 ALPHA (3) = 10.770

X/L	.050	.250	.500	.750	.950
X/LD					
.050	.2744	.2282	.2550	.2274	.3542
.500	.2730	.2363	.2162	.2320	.3509
.950	.3091	.4900	.3061	.4981	.2606

MACH (1) = .200 ALPHA (4) = 16.160

X/L	.050	.250	.500	.750	.950
X/LD					
.050	.3992	.3713	.3842	.3676	.4860
.500	.3882	.3696	.3589	.3712	.4975
.950	.4432	.5824	.4392	.6091	.3669

MACH (1) = .200 ALPHA (5) = 19.390

X/L	.050	.250	.500	.750	.950
X/LD					
.050	.4725	.4516	.4642	.4511	.5531
.500	.4625	.4483	.4456	.4524	.5661
.950	.5226	.6277	.5163	.6674	.4188

NAAL 737 OA143 ORB/B66-NOSE GEAR LT SDWALL CPS (RFCL06) (14 MAY 75)

REFERENCE DATA

SREF =	2690.0000 SQ.FT.	XMRP =	1076.7000 IN.XO		
LREF =	474.8000 IN.	YMRP =	.0000 IN.YO		
BREF =	936.6800 IN.	ZMRP =	375.0000 IN.ZO		
SCALE =	.4050				

PARAMETRIC DATA

BETA =	.000	BDFLAP =	-11.700
ELEVON =	10.000	RUDDER =	.000
SPDBRK =	25.000	GRDPLN =	1.000
LNGRPS =	1.000	LNDGDR =	100.000

SECTION (1)NS GR LT SWAL CPS DEPENDENT VARIABLE CP

MACH (1) = .200 ALPHA (1) = .110

X/L	.050	.250	.500	.750	.950
X/LD					
.050	.0111	.0013	-.0573	-.0382	.0856
.500	.0003	-.0480	-.0750	-.0742	-.0325
.950	.0274	.1895	-.0501	-.0145	.0367

MACH (1) = .200 ALPHA (2) = 5.470

X/L	.050	.250	.500	.750	.950
X/LD					
.050	.1424	.1303	.0789	.0953	.2052
.500	.1377	.0941	.0678	.0671	.1146
.950	.1684	.2931	.0871	.1341	.1783

MACH (1) = .200 ALPHA (3) = 10.840

X/L	.050	.250	.500	.750	.950
X/LD					
.050	.2740	.2570	.2253	.2435	.3224
.500	.2723	.2303	.2230	.2199	.2825
.950	.3063	.3827	.2323	.3064	.3021

MACH (1) = .200 ALPHA (4) = 16.230

X/L	.050	.250	.500	.750	.950
X/LD					
.050	.4085	.3955	.3812	.3937	.4431
.500	.4032	.3806	.3895	.3780	.4179
.950	.4395	.5267	.3925	.5047	.3970

MACH (1) = .200 ALPHA (5) = 19.450

X/L	.050	.250	.500	.750	.950
X/LD					
.050	.4882	.4796	.4683	.4776	.5139
.500	.4846	.4669	.4666	.4685	.5044
.950	.5189	.6031	.4836	.6215	.4492

NAAL 737 OA143 ORB/B66-NOSE GEAR LT SDWALL CPS (RFCL07) (14 MAY 75)

REFERENCE DATA

SREF =	2690.0000 SQ.FT.	XMRP =	1076.7000 IN.XO
LREF =	474.8000 IN.	YMRP =	.0000 IN.YO
BREF =	938.6800 IN.	ZMRP =	375.0000 IN.ZO
SCALE =	.4050		

PARAMETRIC DATA

BETA =	-4.000	BDFLAP =	-11.700
ELEVON =	10.000	RUDDER =	.000
SPDBRK =	25.000	GRDPLN =	1.000
LNGRPS =	1.000	LNDGDR =	100.000

SECTION (1)NS GR LT SWAL CPS DEPENDENT VARIABLE CP

MACH (1) = .200 ALPHA (1) = .130

X/L	.050	.250	.500	.750	.950
X/LD					
.050	.0043	-.0311	-.0555	-.0313	.0962
.500	-.0023	-.0636	-.0697	-.0700	-.0087
.950	.0386	-.0409	-.0596	-.0263	-.0041

MACH (1) = .200 ALPHA (2) = 5.470

X/L	.050	.250	.500	.750	.950
X/LD					
.050	.1321	.1019	.0788	.1046	.2098
.500	.1241	.0737	.0687	.0716	.1241
.950	.1627	.1429	.0771	.1125	.1310

MACH (1) = .200 ALPHA (3) = 10.870

X/L	.050	.250	.500	.750	.950
X/LD					
.050	.2691	.2446	.2227	.2533	.3329
.500	.2607	.2173	.2140	.2243	.2629
.950	.2997	.3756	.2264	.2841	.2477

MACH (1) = .200 ALPHA (4) = 16.240

X/L	.050	.250	.500	.750	.950
X/LD					
.050	.4048	.3844	.3744	.3976	.4594
.500	.3958	.3691	.3668	.3724	.4211
.950	.4341	.5107	.3881	.4473	.3593

MACH (1) = .200 ALPHA (5) = 19.450

X/L	.050	.250	.500	.750	.950
X/LD					
.050	.4844	.4648	.4658	.4806	.5402
.500	.4698	.4556	.4559	.4572	.5128
.950	.5052	.5783	.4668	.5450	.4179

NAAL 737 OA143 ORB/866-NOSE GEAR LT SDWALL CPS (RFCL08) (14 MAY 75)

REFERENCE DATA

SREF = 2690.0000 SQ.FT. XMRP = 1076.7000 IN.XO
LREF = 474.8000 IN. YMRP = .0000 IN.YO
BREF = 936.6800 IN. ZMRP = 375.0000 IN.ZO
SCALE = .4050

PARAMETRIC DATA

BETA = -8.000 BDFLAP = -11.700
ELEVON = 10.000 RUDDER = .000
SPDBRK = 25.000 GRDPLN = 1.000
LNGRPS = 1.000 LNDGDR = 100.000

SECTION (1)NS GR LT SWAL CPS DEPENDENT VARIABLE CP

MACH (1) = .200 ALPHA (1) = .120

X/L	.050	.250	.500	.750	.950
X/LD					
.050	.0070	-.0464	-.0678	-.0337	.1215
.500	-.0210	-.0678	-.0787	-.0775	.0428
.950	.0282	-.0688	-.0818	-.0566	-.0858

MACH (1) = .200 ALPHA (2) = 5.490

X/L	.050	.250	.500	.750	.950
X/LD					
.050	.1379	.0899	.0943	.1159	.2359
.500	.1040	.0798	.0667	.0693	.1845
.950	.1419	.0607	.0610	.0934	.0212

MACH (1) = .200 ALPHA (3) = 10.870

X/L	.050	.250	.500	.750	.950
X/LD					
.050	.2622	.2224	.2428	.2571	.3540
.500	.2294	.2214	.2101	.2230	.3087
.950	.2525	.2057	.2181	.2427	.1317

MACH (1) = .200 ALPHA (4) = 16.230

X/L	.050	.250	.500	.750	.950
X/LD					
.050	.3853	.3566	.3869	.4095	.4802
.500	.3570	.3606	.3496	.3647	.4422
.950	.3703	.3753	.3743	.4102	.2858

MACH (1) = .200 ALPHA (5) = 19.440

X/L	.050	.250	.500	.750	.950
X/LD					
.050	.4643	.4383	.4709	.4917	.5522
.500	.4406	.4440	.4383	.4446	.5130
.950	.4513	.5162	.4659	.5133	.3707

NAAL 737 OA143 ORB/B66-NOSE GEAR LT SDWALL CPS (RFCL09) (14 MAY 75)

REFERENCE DATA

SREF =	2690.0000 SQ.FT.	XMRP =	1076.7000 IN.XO		
LREF =	474.8000 IN.	YMRP =	.0000 IN.YO		
BREF =	936.6800 IN.	ZMRP =	375.0000 IN.ZO		
SCALE =	.4050				

PARAMETRIC DATA

BETA =	4.000	BDFLAP =	-11.700
ELEVON =	10.000	RUDDER =	.000
SPDBRK =	25.000	GRDPLN =	1.000
LNGRPS =	1.000	LNDGDR =	100.000

SECTION (1)NS GR LT SWAL CPS DEPENDENT VARIABLE CP

MACH (1) = .200 ALPHA (1) = .110

X/L	.050	.250	.500	.750	.950
X/LD					
.050	.0171	.0000	-.0569	-.0578	.0791
.500	.0046	-.0294	-.0633	-.0734	.0262
.950	.0467	.2142	-.0403	.0189	.1006

MACH (1) = .200 ALPHA (2) = 5.450

X/L	.050	.250	.500	.750	.950
X/LD					
.050	.1393	.1222	.0805	.0773	.2004
.500	.1329	.0957	.0762	.0694	.1701
.950	.1702	.3096	.1000	.2130	.2183

MACH (1) = .200 ALPHA (3) = 10.830

X/L	.050	.250	.500	.750	.950
X/LD					
.050	.2738	.2555	.2281	.2201	.3335
.500	.2712	.2321	.2211	.2197	.3194
.950	.3119	.4450	.2528	.4187	.2958

MACH (1) = .200 ALPHA (4) = 16.230

X/L	.050	.250	.500	.750	.950
X/LD					
.050	.4049	.3939	.3973	.3800	.4645
.500	.4096	.3799	.3826	.3745	.4573
.950	.4576	.5766	.4093	.5926	.3964

MACH (1) = .200 ALPHA (5) = 19.440

X/L	.050	.250	.500	.750	.950
X/LD					
.050	.4867	.4674	.4850	.4650	.5505
.500	.4940	.4638	.4711	.4643	.5476
.950	.5359	.6425	.4973	.6707	.4500

NAAL 737 OA143 ORB/B66-NOSE GEAR LT SDWALL CPS (RFCL10) (14 MAY 75)

REFERENCE DATA

SREF =	2690.0000 SQ.FT.	XMRP =	1076.7000 IN.XO		
LREF =	474.8000 IN.	YMRP =	.0000 IN.YO		
BREF =	936.6800 IN.	ZMRP =	375.0000 IN.ZO		
SCALE =	.4050				

PARAMETRIC DATA

BETA =	8.000	BDFLAP =	-11.700
ELEVON =	10.000	RUDDER =	.000
SPDBRK =	25.000	GRDPLN =	1.000
LNGRPS =	1.000	LNDGDR =	100.000

SECTION (1)NS GR LT SWAL CPS DEPENDENT VARIABLE CP

MACH (1) = .200 ALPHA (1) = .110

X/L	.050	.250	.500	.750	.950
X/LD					
.050	.0148	-.0213	-.0557	-.0763	.0757
.500	.0030	-.0451	-.0659	-.0770	.0584
.950	.0610	.2675	-.0206	.1731	.0515

MACH (1) = .200 ALPHA (2) = 5.430

X/L	.050	.250	.500	.750	.950
X/LD					
.050	.1440	.0868	.1117	.0758	.2251
.500	.1568	.0804	.0868	.0864	.2108
.950	.1865	.3811	.1535	.3812	.1533

MACH (1) = .200 ALPHA (3) = 10.830

X/L	.050	.250	.500	.750	.950
X/LD					
.050	.2762	.2309	.2544	.2330	.3544
.500	.2725	.2410	.2202	.2350	.3541
.950	.3122	.4985	.3085	.5042	.2663

MACH (1) = .200 ALPHA (4) = 16.230

X/L	.050	.250	.500	.750	.950
X/LD					
.050	.3993	.3700	.3880	.3723	.4840
.500	.3867	.3710	.3641	.3759	.4964
.950	.4462	.5849	.4425	.6141	.3667

MACH (1) = .200 ALPHA (5) = 19.430

X/L	.050	.250	.500	.750	.950
X/LD					
.050	.4759	.4543	.4649	.4564	.5516
.500	.4636	.4483	.4460	.4551	.5669
.950	.5240	.6299	.5174	.6700	.4159

NAAL 737 OA143 ORB/B66-NOSE GEAR LT SDWALL CPS (RFCL11) (14 MAY 75)

REFERENCE DATA

SREF =	2690.0000 SQ.FT.	XMRP =	1076.7000 IN.XO
LREF =	474.8000 IN.	YMRP =	.0000 IN.YO
BREF =	936.6800 IN.	ZMRP =	375.0000 IN.ZO
SCALE =	.4050		

PARAMETRIC DATA

BETA =	.000	BDFLAP =	-11.700
ELEVON =	15.000	RUDDER =	.000
SPDBRK =	25.000	GRDPLN =	1.000
LNGRPS =	1.000	LNDGDR =	100.000

SECTION (1)NS GR LT SWAL CPS DEPENDENT VARIABLE CP

MACH (1) = .200 ALPHA (1) = .190

X/L	.050	.250	.500	.750	.950
X/LD					
.050	.0114	-.0013	-.0551	-.0371	.0860
.500	.0026	-.0466	-.0745	-.0750	-.0328
.950	.0290	.1924	-.0483	-.0161	.0379

MACH (1) = .200 ALPHA (2) = 5.560

X/L	.050	.250	.500	.750	.950
X/LD					
.050	.1452	.1314	.0778	.0935	.2048
.500	.1392	.0943	.0670	.0693	.1177
.950	.1682	.2926	.0879	.1356	.1783

MACH (1) = .200 ALPHA (3) = 10.920

X/L	.050	.250	.500	.750	.950
X/LD					
.050	.2776	.2638	.2292	.2426	.3313
.500	.2725	.2349	.2272	.2208	.2894
.950	.3081	.3860	.2366	.3092	.3069

MACH (1) = .200 ALPHA (4) = 16.300

X/L	.050	.250	.500	.750	.950
X/LD					
.050	.4106	.3949	.3833	.3951	.4441
.500	.4026	.3816	.3900	.3755	.4222
.950	.4415	.5250	.3903	.5065	.3958

MACH (1) = .200 ALPHA (5) = 19.510

X/L	.050	.250	.500	.750	.950
X/LD					
.050	.4831	.4736	.4693	.4781	.5128
.500	.4795	.4633	.4650	.4661	.5005
.950	.5141	.5969	.4808	.6162	.4464

NAAL 737 OA143 ORB/866-NOSE GEAR LT SDWALL CPS (RFCL12) (14 MAY 75)

REFERENCE DATA

SREF =	2890.0000 SQ.FT.	XMRP =	1076.7000 IN.XO		
LREF =	474.8000 IN.	YMRP =	.0000 IN.YO		
BREF =	938.6800 IN.	ZMRP =	375.0000 IN.ZO		
SCALE =	.4050				

PARAMETRIC DATA

BETA =	-4.000	BDFLAP =	-11.700
ELEVON =	15.000	RUDDER =	.000
SPDBRK =	25.000	GRDPLN =	1.000
LNGRPS =	1.000	LNDGDR =	100.000

SECTION (1)NS GR LT SWAL CPS DEPENDENT VARIABLE CP

MACH (1) = .200 ALPHA (1) = .200

X/L	.050	.250	.500	.750	.950
X/LD					
.050	.0073	-.0291	-.0550	-.0304	.0988
.500	.0013	-.0598	-.0669	-.0680	-.0071
.950	.0360	-.0411	-.0567	-.0261	-.0051

MACH (1) = .200 ALPHA (2) = 5.570

X/L	.050	.250	.500	.750	.950
X/LD					
.050	.1337	.1000	.0798	.1057	.2123
.500	.1273	.0744	.0676	.0719	.1222
.950	.1660	.1599	.0781	.1163	.1302

MACH (1) = .200 ALPHA (3) = 10.970

X/L	.050	.250	.500	.750	.950
X/LD					
.050	.2694	.2409	.2251	.2487	.3333
.500	.2603	.2181	.2144	.2210	.2612
.950	.3029	.3773	.2281	.2797	.2494

MACH (1) = .200 ALPHA (4) = 16.300

X/L	.050	.250	.500	.750	.950
X/LD					
.050	.4081	.3900	.3737	.3995	.4645
.500	.3964	.3713	.3670	.3772	.4258
.950	.4365	.5174	.3884	.4511	.3650

MACH (1) = .200 ALPHA (5) = 19.500

X/L	.050	.250	.500	.750	.950
X/LD					
.050	.4873	.4668	.4658	.4849	.5459
.500	.4737	.4568	.4595	.4611	.5113
.950	.5099	.5822	.4724	.5488	.4161

NAAL 737 OA143 ORB/B66-NOSE GEAR LT SDWALL CPS (RFCL13) (14 MAY 75)

REFERENCE DATA

SREF = 2690.0000 SQ.FT. XMRP = 1076.7000 IN.XO
LREF = 474.8000 IN. YMRP = .0000 IN.YO
BREF = 936.6800 IN. ZMRP = 375.0000 IN.ZO
SCALE = .4050

PARAMETRIC DATA

BETA = -8.000 BDFLAP = -11.700
ELEVON = 15.000 RUDDER = .000
SPDBRK = 25.000 GRDPLN = 1.000
LNGRPS = 1.000 LNDGDR = 100.000

SECTION (1)NS GR LT SWAL CPS DEPENDENT VARIABLE CP

MACH (1) = .200 ALPHA (1) = .210

X/L	.050	.250	.500	.750	.950
X/LD					
.050	.0087	-.0457	-.0667	-.0326	.1206
.500	-.0185	-.0704	-.0779	-.0783	.0440
.950	.0288	-.0646	-.0785	-.0545	-.0600

MACH (1) = .200 ALPHA (2) = 5.590

X/L	.050	.250	.500	.750	.950
X/LD					
.050	.1372	.0888	.0938	.1148	.2339
.500	.1069	.0817	.0696	.0712	.1873
.950	.1416	.0629	.0622	.0940	.0265

MACH (1) = .200 ALPHA (3) = 10.970

X/L	.050	.250	.500	.750	.950
X/LD					
.050	.2624	.2236	.2477	.2600	.3576
.500	.2316	.2246	.2119	.2242	.3158
.950	.2547	.2109	.2189	.2478	.1446

MACH (1) = .200 ALPHA (4) = 16.340

X/L	.050	.250	.500	.750	.950
X/LD					
.050	.3886	.3579	.3896	.4109	.4824
.500	.3616	.3646	.3539	.3650	.4408
.950	.3736	.3810	.3786	.4112	.2859

MACH (1) = .200 ALPHA (5) = 19.520

X/L	.050	.250	.500	.750	.950
X/LD					
.050	.4597	.4418	.4703	.4884	.5537
.500	.4394	.4447	.4351	.4408	.5119
.950	.4514	.5208	.4653	.5145	.3755

NAAL 737 OA143 ORB/B66-NOSE GEAR LT SDWALL CPS (RFCL14) (14 MAY 75)

REFERENCE DATA

SREF = 2690.0000 SQ.FT. XMRP = 1076.7000 IN.XO
LREF = 474.8000 IN. YMRP = .0000 IN.YO
BREF = 936.6800 IN. ZMRP = 375.0000 IN.ZO
SCALE = .4050

PARAMETRIC DATA

BETA = 4.000 BDFLAP = -11.700
ELEVON = 15.000 RUDDER = .000
SPDBRK = 25.000 GRDPLN = 1.000
LNGRPS = 1.000 LNDGDR = 100.000

SECTION (1)NS GR LT SWAL CPS DEPENDENT VARIABLE CP

MACH (1) = .200 ALPHA (1) = .170

X/L	.050	.250	.500	.750	.950
X/LD					
.050	.0195	-.0007	-.0550	-.0564	.0830
.500	.0043	-.0309	-.0615	-.0717	.0259
.950	.0475	.2149	-.0397	.0210	.1039

MACH (1) = .200 ALPHA (2) = 5.550

X/L	.050	.250	.500	.750	.950
X/LD					
.050	.1413	.1217	.0830	.0775	.2041
.500	.1349	.0995	.0766	.0699	.1757
.950	.1732	.3112	.1026	.2114	.2170

MACH (1) = .200 ALPHA (3) = 10.910

X/L	.050	.250	.500	.750	.950
X/LD					
.050	.2753	.2572	.2286	.2215	.3360
.500	.2753	.2367	.2206	.2199	.3198
.950	.3153	.4506	.2552	.4129	.3030

MACH (1) = .200 ALPHA (4) = 16.300

X/L	.050	.250	.500	.750	.950
X/LD					
.050	.4061	.3931	.3978	.3764	.4651
.500	.4107	.3772	.3838	.3715	.4570
.950	.4566	.5775	.4094	.5901	.3992

MACH (1) = .200 ALPHA (5) = 19.500

X/L	.050	.250	.500	.750	.950
X/LD					
.050	.4901	.4732	.4891	.4700	.5504
.500	.4948	.4692	.4738	.4638	.5455
.950	.5370	.6462	.4988	.6740	.4595

NAAL 737 OA143 ORB/B66-NOSE GEAR LT SDWALL CPS (RFCL15) (14 MAY 75)

REFERENCE DATA

SREF =	2690.0000 SQ.FT.	XMRP =	1076.7000 IN.XO		
LREF =	474.8000 IN.	YMRP =	.0000 IN.YO		
BREF =	936.6800 IN.	ZMRP =	375.0000 IN.ZO		
SCALE =	.4050				

PARAMETRIC DATA

BETA =	8.000	BDFLAP =	-11.700
ELEVON =	15.000	RUDDER =	.000
SPDBRK =	25.000	GRDPLN =	1.000
LNGRPS =	1.000	LNDGDR =	100.000

SECTION (1)NS GR LT SWAL CPS DEPENDENT VARIABLE CP

MACH (1) = .200 ALPHA (1) = .200

X/L	.050	.250	.500	.750	.950
X/LD					
.050	.0154	-.0213	-.0528	-.0761	.0758
.500	.0033	-.0454	-.0650	-.0764	.0642
.950	.0608	.2684	-.0199	.1739	.0526

MACH (1) = .200 ALPHA (2) = 5.550

X/L	.050	.250	.500	.750	.950
X/LD					
.050	.1455	.0875	.1188	.0759	.2239
.500	.1539	.0852	.0902	.0871	.2215
.950	.1879	.3816	.1576	.3761	.1540

MACH (1) = .200 ALPHA (3) = 10.930

X/L	.050	.250	.500	.750	.950
X/LD					
.050	.2752	.2307	.2575	.2357	.3559
.500	.2718	.2401	.2197	.2348	.3575
.950	.3109	.4930	.3072	.5059	.2643

MACH (1) = .200 ALPHA (4) = 16.300

X/L	.050	.250	.500	.750	.950
X/LD					
.050	.4017	.3747	.3940	.3752	.4883
.500	.3940	.3727	.3687	.3772	.4988
.950	.4511	.5851	.4477	.6180	.3670

MACH (1) = .200 ALPHA (5) = 19.510

X/L	.050	.250	.500	.750	.950
X/LD					
.050	.4784	.4572	.4675	.4560	.5522
.500	.4662	.4526	.4506	.4595	.5672
.950	.5261	.6283	.5208	.6719	.4225

NAAL 737 OA143 ORB/B66-NOSE GEAR LT SDWALL CPS (RFCL16) (14 MAY 75)

REFERENCE DATA

SREF = 2690.0000 SQ.FT. XMRP = 1076.7000 IN.XO
LREF = 474.8000 IN. YMRP = .0000 IN.YO
BREF = 936.6800 IN. ZMRP = 375.0000 IN.ZO
SCALE = .4050

PARAMETRIC DATA

BETA = .000 BDFLAP = -11.700
ELEVON = 15.000 RUDDER = .000
SPDBRK = 25.000 GRDPLN = .000
LNGRPS = 1.000 LNDGDR = 100.000

SECTION (1)NS GR LT SWAL CPS DEPENDENT VARIABLE CP

MACH (1) = .230 ALPHA (1) = .120

X/L	.050	.250	.500	.750	.950
X/LD					
.050	-.0323	-.0450	-.0993	-.0859	.0470
.500	-.0450	-.0913	-.1137	-.1167	-.0776
.950	-.0154	.1387	-.0902	-.0614	-.0020

MACH (1) = .230 ALPHA (2) = 5.370

X/L	.050	.250	.500	.750	.950
X/LD					
.050	.1103	.0994	.0452	.0667	.1698
.500	.1024	.0552	.0293	.0339	.0784
.950	.1307	.2752	.0536	.1002	.1450

MACH (1) = .230 ALPHA (3) = 10.620

X/L	.050	.250	.500	.750	.950
X/LD					
.050	.2492	.2294	.1978	.2167	.2973
.500	.2440	.1991	.2005	.1920	.2532
.950	.2805	.3712	.2072	.2760	.2773

MACH (1) = .230 ALPHA (4) = 15.880

X/L	.050	.250	.500	.750	.950
X/LD					
.050	.3900	.3685	.3590	.3708	.4275
.500	.3819	.3514	.3691	.3518	.4034
.950	.4221	.5120	.3634	.4831	.3684

MACH (1) = .230 ALPHA (5) = 19.030

X/L	.050	.250	.500	.750	.950
X/LD					
.050	.4661	.4593	.4452	.4567	.4943
.500	.4590	.4477	.4447	.4424	.4802
.950	.4989	.5924	.4607	.5888	.4131

NAAL 737 OA143 ORB/B66-NOSE GEAR LT SDWALL CPS (RFCL17) (14 MAY 75)

REFERENCE DATA

SREF =	2690.0000 SQ.FT.	XMRP =	1076.7000 IN.XO		
LREF =	474.8000 IN.	YMRP =	.0000 IN.YO		
BREF =	936.6800 IN.	ZMRP =	375.0000 IN.ZO		
SCALE =	.4050				

PARAMETRIC DATA

BETA =	-4.000	BDFLAP =	-11.700
ELEVON =	15.000	RUDDER =	.000
SPDBRK =	25.000	GRDPLN =	.000
LNGRPS =	1.000	LNDGDR =	100.000

SECTION (1)NS OR LT SWAL CPS DEPENDENT VARIABLE CP

MACH (1) = .230 ALPHA (1) = .130

X/L	.050	.250	.500	.750	.950
X/LD					
.050	-.0338	-.0742	-.1009	-.0759	.0659
.500	-.0429	-.1045	-.1177	-.1103	-.0517
.950	-.0016	-.0940	-.1047	-.0695	-.0458

MACH (1) = .230 ALPHA (2) = 5.410

X/L	.050	.250	.500	.750	.950
X/LD					
.050	.1019	.0686	.0439	.0701	.1813
.500	.0948	.0385	.0292	.0372	.0939
.950	.1350	.1085	.0415	.0765	.0969

MACH (1) = .230 ALPHA (3) = 10.640

X/L	.050	.250	.500	.750	.950
X/LD					
.050	.2402	.2143	.1928	.2268	.3145
.500	.2350	.1882	.1838	.1944	.2369
.950	.2767	.3470	.2002	.2482	.2201

MACH (1) = .230 ALPHA (4) = 15.910

X/L	.050	.250	.500	.750	.950
X/LD					
.050	.3819	.3658	.3494	.3778	.4453
.500	.3718	.3484	.3421	.3531	.4024
.950	.4163	.5030	.3668	.4239	.3330

MACH (1) = .230 ALPHA (5) = 19.080

X/L	.050	.250	.500	.750	.950
X/LD					
.050	.4668	.4437	.4630	.4649	.5295
.500	.4543	.4307	.4475	.4380	.4965
.950	.4892	.5667	.4573	.5290	.3954

NAAL 737 OA143 ORB/B66-NOSE GEAR LT SDWALL CPS (RFCL18) (14 MAY 75)

REFERENCE DATA

SREF =	2690.0000 SQ.FT.	XMRP =	1076.7000 IN.XO		
LREF =	474.8000 IN.	YMRP =	.0000 IN.YO		
BREF =	936.6800 IN.	ZMRP =	375.0000 IN.ZO		
SCALE =	.4050				

PARAMETRIC DATA

BETA =	-8.000	BDFLAP =	-11.700
ELEVON =	15.000	RUDDER =	.000
SPDBRK =	25.000	GRDPLN =	.000
LNGRPS =	1.000	LNDGDR =	100.000

SECTION (1)NS OR LT SWAL CPS DEPENDENT VARIABLE CP

MACH (1) = .230 ALPHA (1) = .140

X/L	.050	.250	.500	.750	.950
X/LD					
.050	-.0322	-.0885	-.1088	-.0708	.0863
.500	-.0596	-.1105	-.1168	-.1165	-.0050
.950	-.0093	-.1020	-.1215	-.0953	-.1020

MACH (1) = .230 ALPHA (2) = 5.420

X/L	.050	.250	.500	.750	.950
X/LD					
.050	.1019	.0568	.0584	.0867	.2074
.500	.0773	.0505	.0333	.0383	.1575
.950	.1167	.0284	.0292	.0661	.0016

MACH (1) = .230 ALPHA (3) = 10.650

X/L	.050	.250	.500	.750	.950
X/LD					
.050	.2390	.1955	.2200	.2336	.3310
.500	.2050	.1963	.1840	.1972	.2935
.950	.2322	.1827	.1900	.2130	.1187

MACH (1) = .230 ALPHA (4) = 15.920

X/L	.050	.250	.500	.750	.950
X/LD					
.050	.3668	.3312	.3682	.3910	.4662
.500	.3358	.3394	.3274	.3448	.4242
.950	.3491	.3532	.3538	.3862	.2504

MACH (1) = .230 ALPHA (5) = 19.070

X/L	.050	.250	.500	.750	.950
X/LD					
.050	.4417	.4195	.4518	.4750	.5379
.500	.4197	.4249	.4159	.4235	.4968
.950	.4309	.4920	.4450	.4918	.3456

NAAL 737 OA143 ORB/B66-NOSE GEAR LT SDWALL CPS (RFCL19) (14 MAY 75)

REFERENCE DATA

SREF = 2690.0000 SQ.FT. XMRP = 1076.7000 IN.XO
LREF = 474.8000 IN. YMRP = .0000 IN.YO
BREF = 936.6800 IN. ZMRP = 375.0000 IN.ZO
SCALE = .4050

PARAMETRIC DATA

BETA = 4.000 BDFLAP = -11.700
ELEVON = 15.000 RUDDER = .000
SPDBRK = 25.000 GRDPLN = .000
LNGRPS = 1.000 LNDGDR = 100.000

SECTION (1)NS GR LT SWAL CPS DEPENDENT VARIABLE CP

MACH (1) = .230 ALPHA (1) = .150

X/L	.050	.250	.500	.750	.950
X/LD					
.050	-.0219	-.0383	-.0955	-.0949	.0364
.500	-.0367	-.0703	-.1078	-.1179	-.0258
.950	.0062	.1922	-.0857	-.0333	.0496

MACH (1) = .230 ALPHA (2) = 5.360

X/L	.050	.250	.500	.750	.950
X/LD					
.050	.1105	.0900	.0473	.0423	.1698
.500	.0999	.0637	.0407	.0319	.1366
.950	.1412	.2838	.0654	.1559	.1874

MACH (1) = .230 ALPHA (3) = 10.620

X/L	.050	.250	.500	.750	.950
X/LD					
.050	.2497	.2293	.2035	.1931	.3134
.500	.2467	.2092	.1918	.1920	.2917
.950	.2894	.4244	.2222	.3842	.2770

MACH (1) = .230 ALPHA (4) = 15.860

X/L	.050	.250	.500	.750	.950
X/LD					
.050	.3835	.3727	.3718	.3556	.4466
.500	.3859	.3567	.3542	.3506	.4400
.950	.4355	.5622	.3832	.5717	.3700

MACH (1) = .230 ALPHA (5) = 19.040

X/L	.050	.250	.500	.750	.950
X/LD					
.050	.4692	.4482	.4701	.4500	.5327
.500	.4725	.4414	.4525	.4423	.5266
.950	.5174	.6294	.4763	.6602	.4290

NAAL 737 OA143 ORB/B66-NOSE GEAR LT SOWALL CPS (RFCL20) (14 MAY 75)

REFERENCE DATA

SREF = 2690.0000 SQ.FT. XMRP = 1076.7000 IN.XO
LREF = 474.8000 IN. YMRP = .0000 IN.YO
BREF = 936.6800 IN. ZMRP = 375.0000 IN.ZO
SCALE = .4050

PARAMETRIC DATA

BETA = 8.000 BDFLAP = -11.700
ELEVON = 15.000 RUDDER = .000
SPDBRK = 25.000 GRDPLN = .000
LNGRPS = 1.000 LNDGDR = 100.000

SECTION (1)NS GR LT SWAL CPS DEPENDENT VARIABLE CP

MACH (1) = .230 ALPHA (1) = .130

X/L	.050	.250	.500	.750	.950
X/LD					
.050	-.0270	-.0557	-.0985	-.1143	.0297
.500	-.0437	-.0786	-.1103	-.1218	.0080
.950	.0182	.2195	-.0710	.0729	.0267

MACH (1) = .230 ALPHA (2) = 5.350

X/L	.050	.250	.500	.750	.950
X/LD					
.050	.1133	.0619	.0831	.0379	.1945
.500	.1234	.0507	.0606	.0556	.1868
.950	.1629	.3410	.1105	.3354	.1278

MACH (1) = .230 ALPHA (3) = 10.610

X/L	.050	.250	.500	.750	.950
X/LD					
.050	.2523	.2047	.2310	.2095	.3305
.500	.2494	.2134	.1939	.2076	.3228
.950	.2875	.4708	.2754	.4811	.2414

MACH (1) = .230 ALPHA (4) = 15.840

X/L	.050	.250	.500	.750	.950
X/LD					
.050	.3841	.3498	.3699	.3548	.4686
.500	.3743	.3531	.3430	.3572	.4796
.950	.4270	.5747	.4246	.6023	.3526

MACH (1) = .230 ALPHA (5) = 19.010

X/L	.050	.250	.500	.750	.950
X/LD					
.050	.4626	.4430	.4528	.4437	.5407
.500	.4498	.4363	.4333	.4437	.5543
.950	.5096	.6341	.5039	.6705	.3999

NAAL 737 OA143 ORB/B68-NOSE GEAR LT SDWALL CPS (RFCL21) (14 MAY 75)

REFERENCE DATA

SREF =	2890.0000 SQ.FT.	XMRP =	1076.7000 IN.XO		
LREF =	474.8000 IN.	YMRP =	.0000 IN.YO		
BREF =	936.6800 IN.	ZMRP =	375.0000 IN.ZO		
SCALE =	.4050				

PARAMETRIC DATA

BETA =	.000	BDFLAP =	-11.700
ELEVON =	10.000	RUDDER =	.000
SPDBRK =	25.000	GRDPLN =	.000
LNGRPS =	1.000	LNDGDR =	100.000

SECTION (1)NS GR LT SWAL CPS DEPENDENT VARIABLE CP

MACH (1) = .230 ALPHA (1) = .080

X/L	.050	.250	.500	.750	.950
X/LD					
.050	-.0320	-.0471	-.0978	-.0802	.0439
.500	-.0460	-.0923	-.1191	-.1153	-.0780
.950	-.0203	.1426	-.0923	-.0633	-.0060

MACH (1) = .230 ALPHA (2) = 5.340

X/L	.050	.250	.500	.750	.950
X/LD					
.050	.1123	.0978	.0476	.0614	.1684
.500	.1013	.0550	.0287	.0327	.0813
.950	.1285	.2787	.0542	.1011	.1408

MACH (1) = .230 ALPHA (3) = 10.550

X/L	.050	.250	.500	.750	.950
X/LD					
.050	.2458	.2271	.1963	.2147	.2953
.500	.2409	.2006	.1952	.1905	.2531
.950	.2769	.3668	.2057	.2773	.2754

MACH (1) = .230 ALPHA (4) = 15.810

X/L	.050	.250	.500	.750	.950
X/LD					
.050	.3894	.3684	.3588	.3728	.4270
.500	.3823	.3545	.3678	.3503	.4002
.950	.4203	.5172	.3673	.4887	.3672

MACH (1) = .230 ALPHA (5) = 18.980

X/L	.050	.250	.500	.750	.950
X/LD					
.050	.4674	.4546	.4421	.4572	.4986
.500	.4611	.4470	.4432	.4473	.4820
.950	.5018	.5978	.4592	.5974	.4129

NAAL 737 OA143 ORB/B68-NOSE GEAR LT SDWALL CPS (RFCL22) (14 MAY 75)

REFERENCE DATA

SREF = 2690.0000 SQ.FT. XMRP = 1076.7000 IN.XO
LREF = 474.8000 IN. YMRP = .0000 IN.YO
BREF = 936.6800 IN. ZMRP = 375.0000 IN.ZO
SCALE = .4050

PARAMETRIC DATA

BETA = -4.000 BDFLAP = -11.700
ELEVON = 10.000 RUDDER = .000
SPDBRK = 25.000 GRDPLN = .000
LNGRPS = 1.000 LNGGDR = 100.000

SECTION (1)NS OR LT SWAL CPS DEPENDENT VARIABLE CP

MACH (1) = .230 ALPHA (1) = .090

X/L	.050	.250	.500	.750	.950
X/LO					
.050	-.0344	-.0737	-.1018	-.0763	.0614
.500	-.0435	-.1057	-.1153	-.1099	-.0445
.950	-.0052	-.0930	-.1004	-.0693	-.0437

MACH (1) = .230 ALPHA (2) = 5.300

X/L	.050	.250	.500	.750	.950
X/LO					
.050	.0960	.0661	.0370	.0680	.1794
.500	.0974	.0381	.0263	.0339	.0908
.950	.1323	.1078	.0430	.0757	.0986

MACH (1) = .230 ALPHA (3) = 10.570

X/L	.050	.250	.500	.750	.950
X/LO					
.050	.2383	.2140	.1921	.2231	.3087
.500	.2288	.1864	.1802	.1939	.2305
.950	.2727	.3479	.1942	.2486	.2167

MACH (1) = .230 ALPHA (4) = 15.810

X/L	.050	.250	.500	.750	.950
X/LO					
.050	.3813	.3607	.3463	.3718	.4416
.500	.3702	.3417	.3385	.3465	.3985
.950	.4133	.4935	.3634	.4232	.3314

MACH (1) = .230 ALPHA (5) = 18.930

X/L	.050	.250	.500	.750	.950
X/LO					
.050	.4638	.4444	.4465	.4615	.5238
.500	.4511	.4322	.4343	.4346	.4924
.950	.4858	.5706	.4430	.5286	.3941

NAAL 737 OA143 ORB/B66-NOSE GEAR LT SDWALL CPS (RFCL23) (14 MAY 75).

REFERENCE DATA

SREF = 2690.0000 SQ.FT. XMRP = 1078.7000 IN.XO
LREF = 474.8000 IN. YMRP = .0000 IN.YO
BREF = 236.6800 IN. ZMRP = 375.0000 IN.ZO
SCALE = .4050

PARAMETRIC DATA

BETA = -8.000 BDFLAP = -11.700
ELEVON = 10.000 RUDDER = .000
SPDBRK = 25.000 GRDPLN = .000
LNGRPS = 1.000 LNDGDR = 100.000

SECTION (1)NS GR LT SWAL CPS DEPENDENT VARIABLE CP

MACH (1) = .230 ALPHA (1) = .100

X/L	.050	.250	.500	.750	.950
X/LD					
.050	-.0314	-.0889	-.1109	-.0752	.0880
.500	-.0630	-.1109	-.1203	-.1218	-.0055
.950	-.0105	-.1046	-.1211	-.0941	-.1040

MACH (1) = .230 ALPHA (2) = 5.320

X/L	.050	.250	.500	.750	.950
X/LD					
.050	.1057	.0590	.0538	.0785	.2044
.500	.0769	.0477	.0345	.0382	.1505
.950	.1085	.0274	.0326	.0616	-.0063

MACH (1) = .230 ALPHA (3) = 10.590

X/L	.050	.250	.500	.750	.950
X/LD					
.050	.2387	.1971	.2188	.2311	.3353
.500	.2069	.1957	.1835	.1988	.2907
.950	.2281	.1808	.1876	.2146	.1166

MACH (1) = .230 ALPHA (4) = 15.850

X/L	.050	.250	.500	.750	.950
X/LD					
.050	.3658	.3335	.3680	.3892	.4687
.500	.3354	.3384	.3275	.3430	.4268
.950	.3476	.3528	.3525	.3852	.2539

MACH (1) = .230 ALPHA (5) = 19.010

X/L	.050	.250	.500	.750	.950
X/LD					
.050	.4412	.4182	.4488	.4701	.5386
.500	.4182	.4233	.4141	.4230	.4941
.950	.4317	.4922	.4439	.4920	.3399

NAAL 737 OA143 ORB/B66-NOSE GEAR LT SDWALL CPS (RFCL24) (14 MAY 75)

REFERENCE DATA

SREF =	2690.0000 SQ.FT.	XMRP =	1076.7000 IN.XO
LREF =	474.8000 IN.	YMRP =	.0000 IN.YO
BREF =	936.6800 IN.	ZMRP =	375.0000 IN.ZO
SCALE =	.4050		

PARAMETRIC DATA

BETA =	4.000	BDFLAP =	-11.700
ELEVON =	10.000	RUDDER =	.000
SPDBRK =	25.000	GRDPLN =	.000
LNGRPS =	1.000	LNDGDR =	100.000

SECTION (1)NS GR LT SWAL CPS DEPENDENT VARIABLE CP

MACH (1) = .230 ALPHA (1) = .070

X/L	.050	.250	.500	.750	.950
X/LD					
.050	-.0226	-.0387	-.1006	-.0972	.0352
.500	-.0393	-.0695	-.1107	-.1204	-.0255
.950	.0018	.1945	-.0878	-.0388	.0475

MACH (1) = .230 ALPHA (2) = 5.290

X/L	.050	.250	.500	.750	.950
X/LD					
.050	.1079	.0881	.0457	.0442	.1670
.500	.0997	.0624	.0405	.0317	.1369
.950	.1405	.2872	.0632	.1600	.1883

MACH (1) = .230 ALPHA (3) = 10.530

X/L	.050	.250	.500	.750	.950
X/LD					
.050	.2455	.2279	.1978	.1929	.3076
.500	.2439	.2048	.1902	.1897	.2919
.950	.2832	.4246	.2181	.3814	.2738

MACH (1) = .230 ALPHA (4) = 15.790

X/L	.050	.250	.500	.750	.950
X/LD					
.050	.3826	.3718	.3704	.3537	.4454
.500	.3859	.3563	.3571	.3507	.4350
.950	.4355	.5633	.3843	.5747	.3681

MACH (1) = .230 ALPHA (5) = 18.950

X/L	.050	.250	.500	.750	.950
X/LD					
.050	.4634	.4467	.4631	.4427	.5315
.500	.4669	.4394	.4456	.4350	.5233
.950	.5136	.6290	.4720	.6553	.4255

NAAL 737 OA143 ORB/B66-NOSE GEAR LT SDWALL CPS (RFCL25) (14 MAY 75)

REFERENCE DATA

SREF =	2690.0000 SQ.FT.	XMRP =	1076.7000 IN.XO		
LREF =	474.8000 IN.	YMRP =	.0000 IN.YO		
BREF =	936.6800 IN.	ZMRP =	375.0000 IN.ZO		
SCALE =	.4050				

PARAMETRIC DATA

BETA =	8.000	BDFLAP =	-11.700
ELEVON =	10.000	RUDDER =	.000
SPDBRK =	25.000	GRDPLN =	.000
LNGRPS =	1.000	LNDGDR =	100.000

SECTION (1)NS OR LT SHAL CPS DEPENDENT VARIABLE CP

MACH (1) = .230 ALPHA (1) = .100

X/L	.050	.250	.500	.750	.950
X/LD					
.050	-.0260	-.0537	-.0965	-.1119	.0333
.500	-.0425	-.0800	-.1083	-.1199	.0091
.950	.0158	.2226	-.0710	.0791	.0274

MACH (1) = .230 ALPHA (2) = 5.310

X/L	.050	.250	.500	.750	.950
X/LD					
.050	.1111	.0569	.0833	.0471	.1966
.500	.1215	.0448	.0580	.0517	.1869
.950	.1595	.3380	.1031	.3424	.1270

MACH (1) = .230 ALPHA (3) = 10.550

X/L	.050	.250	.500	.750	.950
X/LD					
.050	.2525	.2040	.2309	.2072	.3330
.500	.2486	.2151	.1939	.2080	.3244
.950	.2884	.4744	.2756	.4804	.2409

MACH (1) = .230 ALPHA (4) = 15.830

X/L	.050	.250	.500	.750	.950
X/LD					
.050	.3859	.3493	.3661	.3537	.4568
.500	.3734	.3503	.3436	.3553	.4764
.950	.4229	.5706	.4245	.6029	.3475

MACH (1) = .230 ALPHA (5) = 18.970

X/L	.050	.250	.500	.750	.950
X/LD					
.050	.4636	.4370	.4505	.4364	.5395
.500	.4481	.4313	.4334	.4369	.5518
.950	.5110	.6287	.4991	.6600	.3991

NAAL 737 OA143 ORB/B66-NOSE GEAR LT SDWALL CPS (RFCL26) (14 MAY 75)

REFERENCE DATA

SREF = 2690.0000 SQ.FT. XMRP = 1078.7000 IN.XO
LREF = 474.8000 IN. YMRP = .0000 IN.YO
BREF = 938.6800 IN. ZMRP = 375.0000 IN.ZO
SCALE = .4050

PARAMETRIC DATA

BETA = 8.000 BDFLAP = -11.700
ELEVON = 10.000 RUDDER = .000
SPDBRK = 25.000 GRDPLN = .000
LNGRPS = .000 LNDGDR = .000

SECTION (1)NS GR LT SWAL CPS DEPENDENT VARIABLE CP

MACH (1) = .230 ALPHA (1) = .070

X/L	.050	.250	.500	.750	.950
X/LD					
.050	-.1402	-.1534	-.1520	-.1488	-.1469
.500	-.1520	-.1512	-.1507	-.1523	-.1466
.950	-.1476	-.1504	-.1507	-.1490	-.1628

MACH (1) = .230 ALPHA (2) = 5.330

X/L	.050	.250	.500	.750	.950
X/LD					
.050	-.0162	-.0327	-.0343	-.0329	-.0361
.500	-.0316	-.0349	-.0330	-.0348	-.0356
.950	-.0354	-.0343	-.0382	-.0412	-.0582

MACH (1) = .230 ALPHA (3) = 10.570

X/L	.050	.250	.500	.750	.950
X/LD					
.050	.1020	.0883	.0883	.0883	.0881
.500	.0872	.0847	.0888	.0894	.0873
.950	.0842	.0883	.0861	.0773	.0532

MACH (1) = .230 ALPHA (4) = 15.850

X/L	.050	.250	.500	.750	.950
X/LD					
.050	.2223	.2161	.2131	.2111	.2148
.500	.2134	.2099	.2134	.2143	.2156
.950	.2066	.2120	.2104	.2036	.1698

MACH (1) = .230 ALPHA (5) = 19.010

X/L	.050	.250	.500	.750	.950
X/LD					
.050	.2941	.2892	.2870	.2858	.2869
.500	.2841	.2824	.2876	.2880	.2877
.950	.2768	.2824	.2819	.2728	.2404

NAAL 737 OA143 ORB/B66-NOSE GEAR LT SDWALL CPS (RFCL27) (14 MAY 75)

REFERENCE DATA

SREF =	2690.0000 SQ.FT.	XMRP =	1076.7000 IN.XO		
LREF =	474.8000 IN.	YMRP =	.0000 IN.YO		
BREF =	936.6800 IN.	ZMRP =	375.0000 IN.ZO		
SCALE =	.4050				

PARAMETRIC DATA

BETA =	8.000	BDFLAP =	-11.700
ELEVON =	10.000	RUDDER =	.000
SPDBRK =	25.000	GRDPLN =	.000
LNGRPS =	.000	LNDGDR =	40.000

SECTION (1)NS GR LT SWAL CPS DEPENDENT VARIABLE CP

MACH (1) = .230 ALPHA (1) = .080

X/L	.050	.250	.500	.750	.950
X/LD					
.050	-.1379	-.1536	-.1706	-.1932	-.0323
.500	-.1544	-.1695	-.1840	-.1867	-.0618
.950	-.1086	-.0321	-.1195	.1638	-.0425

MACH (1) = .230 ALPHA (2) = 5.320

X/L	.050	.250	.500	.750	.950
X/LD					
.050	-.0110	-.0399	-.0470	-.0603	.0936
.500	-.0228	-.0454	-.0624	-.0593	.0785
.950	-.0041	.1321	.0211	.2626	.0968

MACH (1) = .230 ALPHA (3) = 10.550

X/L	.050	.250	.500	.750	.950
X/LD					
.050	.1245	.0919	.0910	.0784	.2331
.500	.1155	.0891	.0751	.0865	.2341
.950	.1358	.3215	.1665	.3751	.2529

MACH (1) = .230 ALPHA (4) = 15.820

X/L	.050	.250	.500	.750	.950
X/LD					
.050	.2622	.2326	.2464	.2209	.3725
.500	.2546	.2269	.2256	.2305	.3744
.950	.2909	.4723	.3107	.4868	.4098

MACH (1) = .230 ALPHA (5) = 18.970

X/L	.050	.250	.500	.750	.950
X/LD					
.050	.3311	.3165	.3362	.3007	.4724
.500	.3224	.3146	.3200	.3151	.4501
.950	.3817	.5472	.4044	.5545	.4623

NAAL 737 OA143 ORB/B66-NOSE GEAR LT SDWALL CPS (RFCL29) (14 MAY 75)

REFERENCE DATA

SREF =	2690.0000 SQ.FT.	XMRP =	1078.7000 IN.XO
LREF =	474.8000 IN.	YMRP =	.0000 IN.YO
BREF =	936.6800 IN.	ZMRP =	375.0000 IN.ZO
SCALE =	.4050		

PARAMETRIC DATA

BETA =	8.000	BDFLAP =	-11.700
ELEVON =	10.000	RUDDER =	.000
SPDBRK =	25.000	GRDPLN =	.000
LNGRPS =	.000	LNDGDR =	80.000

SECTION (1)NS GR LT SWAL CPS DEPENDENT VARIABLE CP

MACH (1) = .230 ALPHA (1) = .090

X/L	.050	.250	.500	.750	.950
X/LD					
.050	-.0743	-.1009	-.1310	-.1663	.0638
.500	-.0959	-.1392	-.1417	-.1414	-.0167
.950	-.0189	.1895	-.0721	.2971	.0311

MACH (1) = .230 ALPHA (2) = 5.330

X/L	.050	.250	.500	.750	.950
X/LD					
.050	.0621	.0344	.0040	-.0202	.2133
.500	.0448	.0109	-.0129	-.0020	.1519
.950	.1196	.2977	.0703	.3903	.2395

MACH (1) = .230 ALPHA (3) = 10.560

X/L	.050	.250	.500	.750	.950
X/LD					
.050	.2046	.1647	.1397	.1735	.3716
.500	.1953	.1716	.1334	.1617	.3384
.950	.2517	.4279	.2375	.4915	.4532

MACH (1) = .230 ALPHA (4) = 15.810

X/L	.050	.250	.500	.750	.950
X/LD					
.050	.3421	.3052	.3138	.3173	.5107
.500	.3312	.3073	.2894	.3098	.4808
.950	.3893	.5574	.3768	.5840	.5843

MACH (1) = .230 ALPHA (5) = 18.970

X/L	.050	.250	.500	.750	.950
X/LD					
.050	.4196	.3868	.4087	.4028	.5810
.500	.4131	.3851	.3795	.3921	.5535
.950	.4708	.6163	.4581	.6326	.6342

NAAL 737 OA143 ORB/B66-NOSE GEAR LT SDWALL CPS (RFCL30) (14 MAY 75)

REFERENCE DATA

SREF =	2690.0000 SQ.FT.	XMRP =	1076.7000 IN.XO		
LREF =	474.8000 IN.	YMRP =	.0000 IN.YO		
BREF =	936.6800 IN.	ZMRP =	375.0000 IN.ZO		
SCALE =	.4050				

PARAMETRIC DATA

BETA =	.000	BDFLAP =	-11.700
ELEVON =	5.000	RUDDER =	.000
SPDBRK =	25.000	GRDPLN =	.000
LNGRPS =	1.000	LNDGDR =	100.000

SECTION (1)NS GR LT SWAL CPS DEPENDENT VARIABLE CP

MACH (1) = .230 ALPHA (1) = .010

X/L	.050	.250	.500	.750	.950
X/LD					
.050	-.0411	-.0502	-.1048	-.0860	.0368
.500	-.0502	-.0916	-.1191	-.1198	-.0787
.950	-.0302	.1195	-.0955	-.0769	-.0160

MACH (1) = .230 ALPHA (2) = 5.240

X/L	.050	.250	.500	.750	.950
X/LD					
.050	.1048	.0974	.0412	.0609	.1648
.500	.0985	.0600	.0245	.0254	.0732
.950	.1218	.2343	.0499	.0823	.1170

MACH (1) = .230 ALPHA (3) = 10.470

X/L	.050	.250	.500	.750	.950
X/LD					
.050	.2439	.2325	.1928	.2050	.2934
.500	.2379	.2040	.1874	.1898	.2499
.950	.2751	.3330	.2023	.2624	.2528

MACH (1) = .230 ALPHA (4) = 15.730

X/L	.050	.250	.500	.750	.950
X/LD					
.050	.3868	.3737	.3555	.3673	.4212
.500	.3787	.3525	.3514	.3542	.4049
.950	.4171	.4722	.3664	.4711	.3446

MACH (1) = .230 ALPHA (5) = 18.890

X/L	.050	.250	.500	.750	.950
X/LD					
.050	.4681	.4542	.4441	.4547	.4949
.500	.4597	.4401	.4376	.4432	.4887
.950	.5000	.5608	.4548	.5851	.3910

NAAL 737 OA143 ORB/B66-NOSE GEAR LT SDWALL CPS (RFCL31) (14 MAY 75)

REFERENCE DATA

SREF = 2690.0000 SQ.FT. XMRP = 1076.7000 IN.XO
LREF = 474.8000 IN. YMRP = .0000 IN.YO
BREF = 936.6800 IN. ZMRP = 375.0000 IN.ZO
SCALE = .4050

PARAMETRIC DATA

BETA = -4.000 BDFLAP = -11.700
ELEVON = 5.000 RUDDER = .000
SPDBRK = 25.000 GRDFLN = .000
LNGRPS = 1.000 LNDGDR = 100.000

SECTION (1)NS GR LT SWAL CPS DEPENDENT VARIABLE CP

MACH (1) = .230 ALPHA (1) = .000

X/L	.050	.250	.500	.750	.950
X/LD					
.050	-.0417	-.0818	-.1056	-.0830	.0524
.500	-.0466	-.1122	-.1172	-.1131	-.0498
.950	-.0126	-.1034	-.1037	-.0779	-.0769

MACH (1) = .230 ALPHA (2) = 5.250

X/L	.050	.250	.500	.750	.950
X/LD					
.050	.0972	.0657	.0383	.0673	.1743
.500	.0929	.0391	.0273	.0362	.0933
.950	.1255	.1104	.0424	.0671	.0799

MACH (1) = .230 ALPHA (3) = 10.480

X/L	.050	.250	.500	.750	.950
X/LD					
.050	.2390	.2140	.1936	.2224	.3032
.500	.2311	.1881	.1805	.1922	.2320
.950	.2684	.3446	.1941	.2414	.2077

MACH (1) = .230 ALPHA (4) = 15.760

X/L	.050	.250	.500	.750	.950
X/LD					
.050	.3844	.3619	.3461	.3706	.4378
.500	.3732	.3458	.3417	.3487	.3967
.950	.4129	.4740	.3583	.4186	.3164

MACH (1) = .230 ALPHA (5) = 18.910

X/L	.050	.250	.500	.750	.950
X/LD					
.050	.4655	.4430	.4427	.4572	.5268
.500	.4508	.4359	.4308	.4346	.4911
.950	.4931	.5509	.4416	.5198	.3653

NAAL 737 OA143 ORB/B66-NOSE GEAR LT SDWALL CPS (RFCL32) (14 MAY 75)

REFERENCE DATA

SREF =	2690.0000 SQ.FT.	XMRP =	1076.7000 IN.XO		
LREF =	474.8000 IN.	YMRP =	.0000 IN.YO		
BREF =	936.6800 IN.	ZMRP =	375.0000 IN.ZO		
SCALE =	.4050				

PARAMETRIC DATA

BETA =	-8.000	BDFLAP =	-11.700
ELEVON =	5.000	RUDDER =	.000
SPDBRK =	25.000	GRDPLN =	.000
LNGRPS =	1.000	LNDGDR =	100.000

SECTION (1)NS GR LT SWAL CPS DEPENDENT VARIABLE CP

MACH (1) = .230 ALPHA (1) = .050

X/L	.050	.250	.500	.750	.950
X/LD					
.050	-.0370	-.0859	-.1086	-.0742	.0816
.500	-.0639	-.1111	-.1199	-.1171	.0006
.950	-.0115	-.0998	-.1215	-.0943	-.1412

MACH (1) = .230 ALPHA (2) = 5.250

X/L	.050	.250	.500	.750	.950
X/LD					
.050	.1004	.0540	.0581	.0809	.2016
.500	.0743	.0452	.0342	.0411	.1614
.950	.1084	.0285	.0276	.0618	-.0297

MACH (1) = .230 ALPHA (3) = 10.520

X/L	.050	.250	.500	.750	.950
X/LD					
.050	.2390	.1980	.2202	.2295	.3284
.500	.2059	.1977	.1817	.1970	.2911
.950	.2284	.1885	.1872	.2120	.0993

MACH (1) = .230 ALPHA (4) = 15.790

X/L	.050	.250	.500	.750	.950
X/LD					
.050	.3640	.3302	.3670	.3921	.4730
.500	.3351	.3378	.3283	.3460	.4282
.950	.3498	.3703	.3526	.3800	.2428

MACH (1) = .230 ALPHA (5) = 18.960

X/L	.050	.250	.500	.750	.950
X/LD					
.050	.4400	.4162	.4486	.4697	.5375
.500	.4183	.4194	.4097	.4186	.4941
.950	.4273	.5030	.4397	.4851	.3351

NAAL 737 OA143 ORB/B66-NOSE GEAR LT SDWALL CPS (RFCL33) (14 MAY 75)

REFERENCE DATA

SREF =	2690.0000 SQ.FT.	XMRP =	1076.7000 IN.XO		
LREF =	474.8000 IN.	YMRP =	.0000 IN.YO		
BREF =	936.6800 IN.	ZMRP =	375.0000 IN.ZO		
SCALE =	.4050				

PARAMETRIC DATA

BETA =	4.000	BDFLAP =	-11.700
ELEVON =	5.000	RUDDER =	.000
SPDBRK =	25.000	GRDPLN =	.000
LNGRPS =	1.000	LNDGDR =	100.000

SECTION (1)NS GR LT SWAL CPS DEPENDENT VARIABLE CP

MACH (1) = .230 ALPHA (1) = .010

X/L	.050	.250	.500	.750	.950
X/LD					
.050	-.0298	-.0502	-.1080	-.1020	.0353
.500	-.0452	-.0807	-.1168	-.1249	-.0365
.950	.0000	.1234	-.0901	-.0594	.0297

MACH (1) = .230 ALPHA (2) = 5.230

X/L	.050	.250	.500	.750	.950
X/LD					
.050	.1042	.0833	.0427	.0408	.1707
.500	.0990	.0537	.0389	.0317	.1224
.950	.1393	.2193	.0608	.1457	.1631

MACH (1) = .230 ALPHA (3) = 10.470

X/L	.050	.250	.500	.750	.950
X/LD					
.050	.2442	.2260	.1996	.1925	.3110
.500	.2444	.2004	.1866	.1938	.2827
.950	.2857	.3865	.2186	.3673	.2552

MACH (1) = .230 ALPHA (4) = 15.750

X/L	.050	.250	.500	.750	.950
X/LD					
.050	.3850	.3698	.3741	.3538	.4437
.500	.3866	.3548	.3573	.3488	.4240
.950	.4357	.5378	.3809	.5640	.3426

MACH (1) = .230 ALPHA (5) = 18.910

X/L	.050	.250	.500	.750	.950
X/LD					
.050	.4678	.4461	.4705	.4469	.5186
.500	.4729	.4425	.4531	.4421	.4973
.950	.5244	.6090	.4756	.6534	.3896

NAAL 737 OA143 ORB/B66-NOSE GEAR LT SDWALL CPS (RFCL34) (14 MAY 75)

REFERENCE DATA

SREF =	2690.0000 SQ.FT.	XMRP =	1076.7000 IN.XO		
LREF =	474.8000 IN.	YMRP =	.0000 IN.YO		
BREF =	936.6800 IN.	ZMRP =	375.0000 IN.ZO		
SCALE =	.4050				

PARAMETRIC DATA

BETA =	8.000	BDFLAP =	-11.700
ELEVON =	5.000	RUDDER =	.000
SPDBRK =	25.000	GRDPLN =	.000
LNGRPS =	1.000	LNDGDR =	100.000

SECTION (1)NS OR LT SWAL CPS DEPENDENT VARIABLE CP

MACH (1) = .230 ALPHA (1) = -4.170

X/L	.050	.250	.500	.750	.950
X/LD					
.050	-.1345	-.1594	-.2142	-.2232	-.0791
.500	-.1559	-.1871	-.2216	-.2404	-.1351
.950	-.0885	.0758	-.1945	-.1306	-.0936

MACH (1) = .230 ALPHA (2) = -2.080

X/L	.050	.250	.500	.750	.950
X/LD					
.050	-.0830	-.1099	-.1602	-.1729	-.0265
.500	-.1000	-.1407	-.1704	-.1852	-.0711
.950	-.0343	.1189	-.1352	-.0316	-.0493

MACH (1) = .230 ALPHA (3) = .020

X/L	.050	.250	.500	.750	.950
X/LD					
.050	-.0296	-.0633	-.0995	-.1197	.0325
.500	-.0414	-.0907	-.1099	-.1234	-.0111
.950	.0198	.1669	-.0732	.0636	-.0055

MACH (1) = .230 ALPHA (4) = 2.090

X/L	.050	.250	.500	.750	.950
X/LD					
.050	.0238	-.0145	-.0346	-.0581	.0891
.500	.0238	-.0434	-.0456	-.0586	.0551
.950	.0803	.2219	-.0088	.1758	.0416

MACH (1) = .230 ALPHA (5) = 4.170

X/L	.050	.250	.500	.750	.950
X/LD					
.050	.0784	.0243	.0479	.0129	.1592
.500	.0935	.0131	.0279	.0255	.1181
.950	.1349	.2643	.0801	.3093	.0744

MACH (1) = .230 ALPHA (6) = 6.270

X/L	.050	.250	.500	.750	.950
X/LD					
.050	.1375	.0806	.1174	.0767	.2112
.500	.1444	.0767	.0863	.0840	.1674
.950	.1812	.3234	.1502	.3662	.1225

MACH (1) = .230 ALPHA (7) = 8.370

X/L	.050	.250	.500	.750	.950
X/LD					
.050	.1939	.1426	.1727	.1420	.2608
.500	.1958	.1423	.1366	.1398	.2238
.950	.2369	.3857	.2151	.4237	.1671

NAAL 737 OA143 ORB/B66-NOSE GEAR LT SDWALL CPS (RFCL34)

SECTION (1)NS GR LT SWAL CPS DEPENDENT VARIABLE CP

MACH (1) = .230 ALPHA (8) = 10.470

X/L	.050	.250	.500	.750	.950
X/LD					
.050	.2475	.2005	.2285	.2107	.3152
.500	.2451	.2094	.1937	.2056	.2743
.950	.2900	.4401	.2785	.4756	.2115

MACH (1) = .230 ALPHA (9) = 12.570

X/L	.050	.250	.500	.750	.950
X/LD					
.050	.3045	.2578	.2866	.2689	.3726
.500	.2901	.2638	.2527	.2641	.3340
.950	.3417	.4822	.3360	.5257	.2532

MACH (1) = .230 ALPHA (10) = 14.650

X/L	.050	.250	.500	.750	.950
X/LD					
.050	.3553	.3208	.3387	.3239	.4222
.500	.3385	.3200	.3135	.3265	.3950
.950	.3973	.5237	.3959	.5768	.2964

MACH (1) = .230 ALPHA (11) = 16.770

X/L	.050	.250	.500	.750	.950
X/LD					
.050	.4087	.3798	.3951	.3824	.4682
.500	.3953	.3758	.3728	.3853	.4561
.950	.4354	.5655	.4500	.6242	.3303

MACH (1) = .230 ALPHA (12) = 18.880

X/L	.050	.250	.500	.750	.950
X/LD					
.050	.4606	.4389	.4476	.4434	.5171
.500	.4492	.4300	.4308	.4359	.5035
.950	.5099	.6062	.5012	.6573	.3683

NAAL 737 OA143 ORB/B65-NOSE GEAR LT SDWALL CPS (RFCL35) (14 MAY 75)

REFERENCE DATA

SREF = 2690.0000 SQ.FT. XMRP = 1076.7000 IN.XO
LREF = 474.8000 IN. YMRP = .0000 IN.YO
BREF = 936.6800 IN. ZMRP = 375.0000 IN.ZO
SCALE = .4050

PARAMETRIC DATA

BETA = .000 BDFLAP = -11.700
ELEVON = 5.000 RUDDER = .000
SPDBRK = 25.000 GRDPLN = .000
LNGRPS = 1.000 LNDGDR = 100.000

SECTION (1)NS GR LT SWAL CPS DEPENDENT VARIABLE CP

MACH (1) = .230 ALPHA (1) = .030

X/L	.050	.250	.500	.750	.950
X/LD					
.050	-.0359	-.0524	-.1065	-.0844	.0384
.500	-.0499	-.0903	-.1197	-.1169	-.0769
.950	-.0247	.1199	-.0906	-.0737	-.0162

MACH (1) = .230 ALPHA (2) = 5.230

X/L	.050	.250	.500	.750	.950
X/LD					
.050	.1101	.0973	.0398	.0567	.1653
.500	.0984	.0568	.0240	.0257	.0736
.950	.1183	.2327	.0478	.0800	.1137

MACH (1) = .230 ALPHA (3) = 10.470

X/L	.050	.250	.500	.750	.950
X/LD					
.050	.2444	.2341	.1903	.2068	.2939
.500	.2373	.2014	.1870	.1919	.2520
.950	.2773	.3330	.2009	.2571	.2488

MACH (1) = .230 ALPHA (4) = 15.750

X/L	.050	.250	.500	.750	.950
X/LD					
.050	.3839	.3727	.3529	.3666	.4240
.500	.3790	.3561	.3485	.3554	.4056
.950	.4186	.4790	.3621	.4713	.3364

MACH (1) = .230 ALPHA (5) = 18.910

X/L	.050	.250	.500	.750	.950
X/LD					
.050	.4680	.4558	.4430	.4565	.4983
.500	.4637	.4413	.4402	.4466	.4926
.950	.5015	.5609	.4590	.5896	.3791

NAAL 737 OA143 ORB/B65-NOSE GEAR LT SDWALL CPS (RFCL36) (14 MAY 75)

REFERENCE DATA

SREF =	2690.0000 SQ.FT.	XMRP =	1076.7000 IN.XO		
LREF =	474.8000 IN.	YMRP =	.0000 IN.YO		
BREF =	936.6800 IN.	ZMRP =	375.0000 IN.ZO		
SCALE =	.4050				

PARAMETRIC DATA

BETA =	-4.000	BDFLAP =	-11.700
ELEVON =	5.000	RUDDER =	.000
SPDBRK =	25.000	GRDPLN =	.000
LNGRPS =	1.000	LNDGDR =	100.000

SECTION (1)NS GR LT SWAL CPS DEPENDENT VARIABLE CP

MACH (1) = .230 ALPHA (1) = .000

X/L	.050	.250	.500	.750	.950
X/LD					
.050	-.0448	-.0813	-.1047	-.0839	.0554
.500	-.0470	-.1082	-.1181	-.1154	-.0463
.950	-.0085	-.1016	-.1036	-.0772	-.0745

MACH (1) = .230 ALPHA (2) = 5.260

X/L	.050	.250	.500	.750	.950
X/LD					
.050	.0967	.0664	.0384	.0678	.1753
.500	.0901	.0329	.0279	.0304	.0960
.950	.1261	.1079	.0384	.0686	.0866

MACH (1) = .230 ALPHA (3) = 10.490

X/L	.050	.250	.500	.750	.950
X/LD					
.050	.2367	.2109	.1930	.2212	.3015
.500	.2305	.1895	.1800	.1900	.2367
.950	.2666	.3436	.1952	.2423	.2087

MACH (1) = .230 ALPHA (4) = 15.770

X/L	.050	.250	.500	.750	.950
X/LD					
.050	.3793	.3582	.3438	.3704	.4380
.500	.3709	.3425	.3371	.3464	.3975
.950	.4137	.4740	.3598	.4148	.3129

MACH (1) = .230 ALPHA (5) = 18.920

X/L	.050	.250	.500	.750	.950
X/LD					
.050	.4613	.4423	.4453	.4579	.5217
.500	.4467	.4337	.4340	.4329	.4922
.950	.4864	.5443	.4429	.5166	.3632

NAAL 737 OA143 ORB/B65-NOSE GEAR LT SDWALL CPS (RFCL37) (14 MAY 75)

REFERENCE DATA

SREF = 2690.0000 SQ.FT. XMRP = 1076.7000 IN.XO
LREF = 474.8000 IN. YMRP = .0000 IN.YO
BREF = 936.6800 IN. ZMRP = 375.0000 IN.ZO
SCALE = .4050

PARAMETRIC DATA

BETA = -8.000 BDFLAP = -11.700
ELEVON = 5.000 RUDDER = .000
SPDBRK = 25.000 GRDPLN = .000
LNGRPS = 1.000 LNDGDR = 100.000

SECTION (1)NS GR LT SWAL CPS DEPENDENT VARIABLE CP

MACH (1) = .230 ALPHA (1) = .030

X/L	.050	.250	.500	.750	.950
X/LD					
.050	-.0406	-.0892	-.1111	-.0747	.0803
.500	-.0628	-.1133	-.1224	-.1211	-.0007
.950	-.0137	-.0980	-.1216	-.0989	-.1289

MACH (1) = .230 ALPHA (2) = 5.250

X/L	.050	.250	.500	.750	.950
X/LD					
.050	.0987	.0598	.0589	.0800	.2015
.500	.0743	.0471	.0356	.0368	.1501
.950	.1108	.0197	.0257	.0569	-.0187

MACH (1) = .230 ALPHA (3) = 10.510

X/L	.050	.250	.500	.750	.950
X/LD					
.050	.2420	.1963	.2169	.2280	.3317
.500	.2080	.1982	.1824	.1975	.2898
.950	.2303	.1867	.1903	.2117	.1111

MACH (1) = .230 ALPHA (4) = 15.790

X/L	.050	.250	.500	.750	.950
X/LD					
.050	.3633	.3321	.3666	.3889	.4665
.500	.3340	.3375	.3253	.3440	.4278
.950	.3506	.3663	.3511	.3830	.2538

MACH (1) = .230 ALPHA (5) = 18.950

X/L	.050	.250	.500	.750	.950
X/LD					
.050	.4434	.4193	.4519	.4694	.5385
.500	.4182	.4223	.4125	.4212	.4953
.950	.4293	.5037	.4437	.4913	.3385

NAAL 737 OA143 ORB/B65-NOSE GEAR LT SDWALL CPS (RFCL38) (14 MAY 75)

REFERENCE DATA

SREF = 2690.0000 SQ.FT. XMRP = 1076.7000 IN.XO
LREF = 474.8000 IN. YMRP = .0000 IN.YO
BREF = 936.6800 IN. ZMRP = 375.0000 IN.ZO
SCALE = .4050

PARAMETRIC DATA

BETA = 4.000 BDFLAP = -11.700
ELEVON = 5.000 RUDDER = .000
SPDBRK = 25.000 GRDPLN = .000
LNGRPS = 1.000 LNDGDR = 100.000

SECTION (1)NS GR LT SWAL CPS DEPENDENT VARIABLE CP

MACH (1) = .230 ALPHA (1) = .010

X/L	.050	.250	.500	.750	.950
X/LD					
.050	-.0258	-.0453	-.1045	-.1013	.0357
.500	-.0425	-.0760	-.1152	-.1227	-.0323
.950	.0013	.1294	-.0916	-.0634	.0236

MACH (1) = .230 ALPHA (2) = 5.240

X/L	.050	.250	.500	.750	.950
X/LD					
.050	.1040	.0885	.0445	.0399	.1690
.500	.1015	.0541	.0365	.0307	.1257
.950	.1419	.2170	.0599	.1497	.1610

MACH (1) = .230 ALPHA (3) = 10.090

X/L	.050	.250	.500	.750	.950
X/LD					
.050	.4674	.4500	.4688	.4513	.5262
.500	.4761	.4456	.4546	.4463	.5059
.950	.5238	.6141	.4769	.6595	.3906

MACH (1) = .230 ALPHA (4) = 10.460

X/L	.050	.250	.500	.750	.950
X/LD					
.050	.2465	.2285	.1978	.1896	.3097
.500	.2457	.2021	.1896	.1894	.2792
.950	.2911	.3891	.2152	.3589	.2541

MACH (1) = .230 ALPHA (5) = 15.730

X/L	.050	.250	.500	.750	.950
X/LD					
.050	.3884	.3715	.3718	.3550	.4442
.500	.3886	.3525	.3549	.3499	.4239
.950	.4392	.5414	.3837	.5625	.3374

NAAL 737 OA143 ORB/865-NOSE GEAR LT SDWALL CPS (RFCL39) (14 MAY 75)

REFERENCE DATA

SREF = 2690.0000 SQ.FT. XMRP = 1076.7000 IN.XO
LREF = 474.8000 IN. YMRP = .0000 IN.YO
BREF = 936.6800 IN. ZMRP = 375.0000 IN.ZO
SCALE = .4050

PARAMETRIC DATA

BETA = 8.000 BDFLAP = -11.700
ELEVON = 5.000 RUDDER = .000
SPDBRK = 25.000 GRDPLN = .000
LNGRPS = 1.000 LNDGDR = 100.000

SECTION (1)NS GR LT SWAL CPS DEPENDENT VARIABLE CP

MACH (1) = .230 ALPHA (1) = .020

X/L	.050	.250	.500	.750	.950
X/LD					
.050	-.0305	-.0618	-.1033	-.1170	.0317
.500	-.0431	-.0937	-.1102	-.1245	-.0082
.950	.0194	.1689	-.0742	.0613	-.0098

MACH (1) = .230 ALPHA (2) = 5.250

X/L	.050	.250	.500	.750	.950
X/LD					
.050	.1101	.0509	.0901	.0440	.1873
.500	.1199	.0446	.0558	.0579	.1455
.950	.1536	.2976	.1199	.3424	.0917

MACH (1) = .230 ALPHA (3) = 10.460

X/L	.050	.250	.500	.750	.950
X/LD					
.050	.2473	.2019	.2280	.2087	.3151
.500	.2456	.2090	.1957	.2044	.2735
.950	.2883	.4370	.2771	.4770	.2172

MACH (1) = .230 ALPHA (4) = 15.740

X/L	.050	.250	.500	.750	.950
X/LD					
.050	.3817	.3486	.3701	.3581	.4467
.500	.3690	.3483	.3445	.3549	.4283
.950	.4292	.5444	.4246	.6004	.3141

MACH (1) = .230 ALPHA (5) = 18.890

X/L	.050	.250	.500	.750	.950
X/LD					
.050	.4607	.4358	.4466	.4389	.5200
.500	.4479	.4303	.4314	.4386	.5077
.950	.5106	.6078	.5033	.6646	.3687

NAAL 737 OA143 ORB/B67-NOSE GEAR LT SDWALL CPS (RFCL56) (14 MAY 75)

REFERENCE DATA

SREF = 2690.0000 SQ.FT. XMRP = 1076.7000 IN.XO
LREF = 474.8000 IN. YMRP = .0000 IN.YO
BREF = 936.6800 IN. ZMRP = 375.0000 IN.ZO
SCALE = .4050

PARAMETRIC DATA

BETA = .000 BDFLAP = -11.700
ELEVON = 5.000 RUDDER = .000
SPDBRK = 25.000 GRDPLN = .000
LNGRPS = 1.000 LNDGDR = 100.000

SECTION (1)NS GR LT SWAL CPS DEPENDENT VARIABLE CP

MACH (1) = .230 ALPHA (1) = -4.160

X/L	.050	.250	.500	.750	.950
X/LD					
.050	-.1411	-.1578	-.2104	-.1876	-.0537
.500	-.1578	-.1984	-.2258	-.2214	-.1828
.950	-.1384	-.0685	-.1995	-.1777	-.1242

MACH (1) = .230 ALPHA (2) = -2.080

X/L	.050	.250	.500	.750	.950
X/LD					
.050	-.0921	-.1064	-.1568	-.1383	-.0103
.500	-.1034	-.1469	-.1738	-.1685	-.1327
.950	-.0828	.0357	-.1471	-.1203	-.0738

MACH (1) = .230 ALPHA (3) = .020

X/L	.050	.250	.500	.750	.950
X/LD					
.050	-.0330	-.0467	-.1020	-.0821	.0388
.500	-.0476	-.0899	-.1191	-.1160	-.0770
.950	-.0297	.1281	-.0940	-.0604	-.0227

MACH (1) = .230 ALPHA (4) = 2.110

X/L	.050	.250	.500	.750	.950
X/LD					
.050	.0224	.0101	-.0428	-.0251	.0920
.500	.0136	-.0269	-.0636	-.0578	-.0157
.950	.0262	.1915	-.0348	-.0044	.0341

MACH (1) = .230 ALPHA (5) = 4.200

X/L	.050	.250	.500	.750	.950
X/LD					
.050	.0777	.0662	.0147	.0357	.1415
.500	.0728	.0366	-.0036	.0014	.0440
.950	.0870	.2456	.0262	.0595	.0879

MACH (1) = .230 ALPHA (6) = 6.290

X/L	.050	.250	.500	.750	.950
X/LD					
.050	.1384	.1228	.0712	.0920	.1914
.500	.1296	.0918	.0539	.0614	.1113
.950	.1538	.2894	.0814	.1349	.1413

MACH (1) = .230 ALPHA (7) = 8.400

X/L	.050	.250	.500	.750	.950
X/LD					
.050	.1669	.1777	.1312	.1439	.2381
.500	.1826	.1482	.1263	.1265	.1901
.950	.2178	.3260	.1427	.2003	.2043

NAAL 737 OA143 ORB/B67-NOSE GEAR LT SDWALL CPS (RFCL56)

SECTION (1)NS GR LT SWAL CPS DEPENDENT VARIABLE CP

MACH (1) = .230 ALPHA (8) = 10.490

X/L	.050	.250	.500	.750	.950
X/LD					
.050	.2450	.2330	.1917	.2058	.2905
.500	.2393	.2015	.1917	.1933	.2523
.950	.2763	.3567	.2039	.2665	.2563

MACH (1) = .230 ALPHA (9) = 12.590

X/L	.050	.250	.500	.750	.950
X/LD					
.050	.2998	.2911	.2596	.2714	.3425
.500	.2968	.2625	.2549	.2602	.3152
.950	.3289	.4069	.2707	.3467	.2925

MACH (1) = .230 ALPHA (10) = 14.700

X/L	.050	.250	.500	.750	.950
X/LD					
.050	.3589	.3450	.3213	.3332	.3963
.500	.3507	.3230	.3164	.3241	.3739
.950	.3877	.4625	.3368	.4311	.3292

MACH (1) = .230 ALPHA (11) = 16.800

X/L	.050	.250	.500	.750	.950
X/LD					
.050	.4123	.4039	.3878	.3948	.4491
.500	.4099	.3857	.3848	.3844	.4341
.950	.4501	.5195	.3984	.5116	.3619

MACH (1) = .230 ALPHA (12) = 18.910

X/L	.050	.250	.500	.750	.950
X/LD					
.050	.4647	.4541	.4446	.4530	.4950
.500	.4590	.4419	.4411	.4471	.4886
.950	.4993	.5766	.4565	.5901	.3973

NAAL 737 OA143 ORB/B67-NOSE GEAR LT SDWALL CPS (RFCL60) (14 MAY 75)

REFERENCE DATA

SREF = 2690.0000 SQ.FT. XMRP = 1076.7000 IN.XO
LREF = 474.8000 IN. YMRP = .0000 IN.YO
BREF = 936.6800 IN. ZMRP = 375.0000 IN.ZO
SCALE = .4050

PARAMETRIC DATA

BETA = 8.000 BDFLAP = -11.700
ELEVON = 5.000 RUDDER = .000
SPDBRK = 25.000 GRDPLN = .000
LNGRPS = 1.000 LNDGDR = 100.000

SECTION (1)NS GR LT SWAL CPS DEPENDENT VARIABLE CP

MACH (1) = .230 ALPHA (1) = -4.130

X/L	.050	.250	.500	.750	.950
X/LD					
.050	-.1351	-.1587	-.2059	-.2186	-.0847
.500	-.1548	-.1842	-.2136	-.2353	-.1319
.950	-.0906	.1040	-.1875	-.1327	-.0874

MACH (1) = .230 ALPHA (2) = -2.050

X/L	.050	.250	.500	.750	.950
X/LD					
.050	-.0840	-.1090	-.1592	-.1722	-.0288
.500	-.1013	-.1414	-.1688	-.1810	-.0702
.950	-.0362	.1339	-.1345	-.0495	-.0345

MACH (1) = .230 ALPHA (3) = .020

X/L	.050	.250	.500	.750	.950
X/LD					
.050	-.0319	-.0610	-.1001	-.1171	.0275
.500	-.0451	-.0921	-.1111	-.1198	-.0074
.950	.0200	.1660	-.0737	.0449	.0089

MACH (1) = .230 ALPHA (4) = 2.120

X/L	.050	.250	.500	.750	.950
X/LD					
.050	.0202	-.0159	-.0335	-.0592	.0897
.500	.0189	-.0395	-.0458	-.0525	.0639
.950	.0743	.2037	-.0101	.1549	.0561

MACH (1) = .230 ALPHA (5) = 4.180

X/L	.050	.250	.500	.750	.950
X/LD					
.050	.0769	.0277	.0612	.0084	.1606
.500	.0915	.0137	.0538	.0221	.1280
.950	.1286	.2441	.0269	.2938	.0974

MACH (1) = .230 ALPHA (6) = 6.290

X/L	.050	.250	.500	.750	.950
X/LD					
.050	.1367	.0830	.1163	.0775	.2163
.500	.1499	.0803	.1196	.0845	.1800
.950	.1807	.3191	.0833	.3662	.1351

MACH (1) = .230 ALPHA (7) = 8.380

X/L	.050	.250	.500	.750	.950
X/LD					
.050	.1922	.1421	.1726	.1464	.2612
.500	.1939	.1487	.1710	.1412	.2289
.950	.2290	.3828	.1375	.4212	.1791

NAAL 737 OA143 ORB/B67-NOSE GEAR LT SDWALL CPS (RFCL60)

SECTION (1)NS GR LT SWAL CPS DEPENDENT VARIABLE CP

MACH (1) = .230 ALPHA (8) = 9.020

X/L	.050	.250	.500	.750	.950
X/LD					
.050	.4071	.3817	.3948	.3877	.4749
.500	.3956	.3803	.3748	.3834	.4564
.950	.4567	.5752	.4518	.6190	.3338

MACH (1) = .230 ALPHA (9) = 10.480

X/L	.050	.250	.500	.750	.950
X/LD					
.050	.2459	.2034	.2309	.2093	.3180
.500	.2437	.2124	.1934	.2059	.2875
.950	.2848	.4411	.2775	.4737	.2179

MACH (1) = .230 ALPHA (10) = 12.590

X/L	.050	.250	.500	.750	.950
X/LD					
.050	.3030	.2627	.2864	.2663	.3752
.500	.2900	.2655	.2546	.2698	.3409
.950	.3395	.4933	.3417	.5258	.2588

MACH (1) = .230 ALPHA (11) = 14.680

X/L	.050	.250	.500	.750	.950
X/LD					
.050	.3558	.3239	.3430	.3267	.4228
.500	.3403	.3223	.3179	.3264	.4043
.950	.3978	.5359	.3997	.5743	.2996

MACH (1) = .230 ALPHA (12) = 18.890

X/L	.050	.250	.500	.750	.950
X/LD					
.050	.4590	.4394	.4506	.4431	.5210
.500	.4492	.4339	.4348	.4388	.5068
.950	.5130	.6108	.5029	.6571	.3627

NAAL 737 OA143 ORB/B66-NOSE GEAR TOP WALL CPS (RFCM01) (14 MAY 75)

REFERENCE DATA

SREF = 2890.0000 SQ.FT. XMRP = 1078.7000 IN.XO
LREF = 474.8000 IN. YMRP = .0000 IN.YO
BREF = 936.8800 IN. ZMRP = 375.0000 IN.ZO
SCALE = .0405

PARAMETRIC DATA

BETA = .000 BDFLAP = -11.700
ELEVON = 5.000 RUDDER = .000
SPDBRK = 25.000 GRDPLN = 1.000
LNGRPS = 1.000 LNDGDR = 100.000

SECTION (1)NS GR TOP WAL CPS DEPENDENT VARIABLE CP

MACH (1) = .200 ALPHA (1) = .010

X/L	.050	.250	.500	.750	.950
X/LW					
.050	.0182	-.0152	-.0591	-.0334	.0860
.500	.0084	-.0122	-.0690	-.0437	.1438
.950	.0134	-.0040	-.0653	-.0391	.0784

MACH (1) = .200 ALPHA (2) = 5.380

X/L	.050	.250	.500	.750	.950
X/LW					
.050	.1445	.1132	.0767	.1045	.2052
.500	.1371	.1142	.0665	.0985	.2528
.950	.1421	.1324	.0702	.0952	.1973

MACH (1) = .200 ALPHA (3) = 10.710

X/L	.050	.250	.500	.750	.950
X/LW					
.050	.2777	.2513	.2243	.2418	.3327
.500	.2757	.2496	.2144	.2451	.3465
.950	.2747	.2576	.2211	.2428	.3244

MACH (1) = .200 ALPHA (4) = 16.140

X/L	.050	.250	.500	.750	.950
X/LW					
.050	.4044	.3938	.3776	.3858	.4564
.500	.4061	.3868	.3732	.3910	.4459
.950	.4068	.3908	.3729	.3933	.4505

MACH (1) = .200 ALPHA (5) = 19.380

X/L	.050	.250	.500	.750	.950
X/LW					
.050	.4818	.4702	.4654	.4674	.5333
.500	.4818	.4659	.4570	.4719	.5180
.950	.4847	.4686	.4586	.4732	.5271

NAAL 737 OA143 ORB/B66-NOSE GEAR TOP WALL CPS (RFCM02) (14 MAY 75)

REFERENCE DATA

SREF = 2690.0000 SQ.FT. XMRP = 1076.7000 IN.XO
LREF = 474.8000 IN. YMRP = .0000 IN.YO
BREF = 936.6800 IN. ZMRP = 375.0000 IN.ZO
SCALE = .0405

PARAMETRIC DATA

BETA = -4.000 BOFLAP = -11.700
ELEVON = 5.000 RUDDER = .000
SPDBRK = 25.000 GRDPLN = 1.000
LNGRPS = 1.000 LNDGDR = 100.000

SECTION (1)NS GR TOP WAL CPS DEPENDENT VARIABLE CP

MACH (1) = .200 ALPHA (1) = .010

X/L	.050	.250	.500	.750	.950
X/LW					
.050	.0019	-.0111	-.0572	-.0546	.0782
.500	-.0047	-.0305	-.0648	-.0450	.1030
.950	.0100	-.0288	-.0665	-.0293	.0971

MACH (1) = .200 ALPHA (2) = 5.370

X/L	.050	.250	.500	.750	.950
X/LW					
.050	.1293	.1165	.0797	.0790	.2131
.500	.1243	.1041	.0722	.0919	.2088
.950	.1380	.1034	.0702	.1064	.2084

MACH (1) = .200 ALPHA (3) = 10.760

X/L	.050	.250	.500	.750	.950
X/LW					
.050	.2602	.2528	.2272	.2245	.3455
.500	.2592	.2398	.2169	.2357	.3297
.950	.2740	.2424	.2166	.2489	.3317

MACH (1) = .200 ALPHA (4) = 16.150

X/L	.050	.250	.500	.750	.950
X/LW					
.050	.3920	.3831	.3883	.3762	.4777
.500	.3821	.3718	.3761	.3831	.4608
.950	.4072	.3804	.3648	.3961	.4533

MACH (1) = .200 ALPHA (5) = 19.360

X/L	.050	.250	.500	.750	.950
X/LW					
.050	.4760	.4552	.4754	.4673	.5638
.500	.4539	.4456	.4701	.4669	.5491
.950	.4863	.4628	.4645	.4786	.5371

NAAL 737 OA143 ORB/866-NOSE GEAR TOP WALL CPS (RFCM03) (14 MAY 75)

REFERENCE DATA

SREF =	2690.0000 SQ.FT.	XMRP =	1076.7000 IN.XO		
LREF =	474.8000 IN.	YMRP =	.0000 IN.YO		
BREF =	936.6800 IN.	ZMRP =	375.0000 IN.ZO		
SCALE =	.0405				

PARAMETRIC DATA

BETA =	-8.000	BDFLAP =	-11.700
ELEVON =	5.000	RUDDER =	.000
SPDBRK =	25.000	GRDPLN =	1.000
LNGRPS =	1.000	LNDGDR =	100.000

SECTION (1)NS GR TOP WAL CPS DEPENDENT VARIABLE CP

MACH (1) = .200 ALPHA (1) = .030

X/L	.050	.250	.500	.750	.950
X/LW					
.050	-.0020	-.0237	-.0619	-.0762	.0726
.500	-.0033	-.0440	-.0729	-.0612	.0818
.950	.0003	-.0440	-.0767	-.0277	.1215

MACH (1) = .200 ALPHA (2) = 5.380

X/L	.050	.250	.500	.750	.950
X/LW					
.050	.1231	.0755	.1076	.0703	.2369
.500	.0822	.0667	.1013	.0855	.2175
.950	.1362	.0882	.0805	.1205	.2350

MACH (1) = .200 ALPHA (3) = 10.760

X/L	.050	.250	.500	.750	.950
X/LW					
.050	.2613	.2205	.2477	.2214	.3636
.500	.2044	.2101	.2379	.2227	.3449
.950	.2633	.2195	.2372	.2575	.3537

MACH (1) = .200 ALPHA (4) = 16.170

X/L	.050	.250	.500	.750	.950
X/LW					
.050	.3876	.3675	.3905	.3738	.4919
.500	.3515	.3525	.3719	.3787	.4673
.950	.3882	.3548	.3789	.4082	.4801

MACH (1) = .200 ALPHA (5) = 19.400

X/L	.050	.250	.500	.750	.950
X/LW					
.050	.4631	.4545	.4633	.4572	.5592
.500	.4369	.4355	.4548	.4578	.5347
.950	.4634	.4375	.4621	.4852	.5494

NAAL 737 OA143 ORB/B66-NOSE GEAR TOP WALL CPS (RFCM04) (14 MAY 75)

REFERENCE DATA

SREF =	2690.0000 SQ.FT.	XMRP =	1076.7000 IN.XO		
LREF =	474.8000 IN.	YMRP =	.0000 IN.YO		
BREF =	936.6800 IN.	ZMRP =	375.0000 IN.ZO		
SCALE =	.0405				

PARAMETRIC DATA

BETA =	4.000	BDFLAP =	-11.700
ELEVON =	5.000	RUDDER =	.000
SPDBRK =	25.000	GRDPLN =	1.000
LNGRPS =	1.000	LNDGDR =	100.000

SECTION (1)NS GR TOP WAL CPS DEPENDENT VARIABLE CP

MACH (1) = .200 ALPHA (1) = .000

X/L	.050	.250	.500	.750	.950
X/LW					
.050	.0225	-.0226	-.0578	-.0257	.1138
.500	.0003	-.0216	-.0657	-.0402	.1290
.950	.0097	-.0013	-.0626	-.0479	.0817

MACH (1) = .200 ALPHA (2) = 5.340

X/L	.050	.250	.500	.750	.950
X/LW					
.050	.1446	.1056	.0768	.1098	.2153
.500	.1264	.1062	.0719	.0966	.2180
.950	.1342	.1204	.0776	.0824	.2120

MACH (1) = .200 ALPHA (3) = 10.730

X/L	.050	.250	.500	.750	.950
X/LW					
.050	.2820	.2485	.2223	.2552	.3368
.500	.2622	.2451	.2220	.2374	.3398
.950	.2689	.2569	.2244	.2269	.3450

MACH (1) = .200 ALPHA (4) = 16.140

X/L	.050	.250	.500	.750	.950
X/LW					
.050	.4135	.3878	.3727	.3989	.4552
.500	.3928	.3812	.3768	.3878	.4624
.950	.4012	.3935	.3925	.3796	.4814

MACH (1) = .200 ALPHA (5) = 19.370

X/L	.050	.250	.500	.750	.950
X/LW					
.050	.4923	.4658	.4608	.4816	.5297
.500	.4609	.4526	.4685	.4725	.5417
.950	.4794	.4625	.4800	.4699	.5664

NAAL 737 OA143 ORB/B66-NOSE GEAR TOP WALL CPS (RFCM05) (14 MAY 75)

REFERENCE DATA

SREF = 2690.0000 SQ.FT. XMRP = 1076.7000 IN.XO
LREF = 474.8000 IN. YMRP = .0000 IN.YO
BREF = 936.6800 IN. ZMRP = 375.0000 IN.ZO
SCALE = .0405

PARAMETRIC DATA

BETA = 8.000 BDFLAP = -11.700
ELEVON = 5.000 RUDDER = .000
SPDBRK = 25.000 GRDPLN = 1.000
LNGRPS = 1.000 LNDGDR = 100.000

SECTION (1)NS GR TOP WAL CPS DEPENDENT VARIABLE CP

MACH (1) = .200 ALPHA (1) = .030

X/L	.050	.250	.500	.750	.950
X/LW					
.050	.0184	-.0402	-.0630	-.0246	.1270
.500	-.0077	-.0408	-.0693	-.0531	.0974
.950	.0036	-.0243	-.0584	-.0673	.0842

MACH (1) = .200 ALPHA (2) = 5.360

X/L	.050	.250	.500	.750	.950
X/LW					
.050	.1512	.0900	.1042	.1283	.2433
.500	.0658	.0699	.1065	.0916	.2218
.950	.1341	.0820	.1183	.0847	.2429

MACH (1) = .200 ALPHA (3) = 10.770

X/L	.050	.250	.500	.750	.950
X/LW					
.050	.2737	.2232	.2533	.2691	.3634
.500	.2028	.2155	.2450	.2369	.3450
.950	.2697	.2282	.2580	.2395	.3706

MACH (1) = .200 ALPHA (4) = 16.160

X/L	.050	.250	.500	.750	.950
X/LW					
.050	.3939	.3586	.3931	.4098	.4847
.500	.3526	.3539	.3772	.3771	.4658
.950	.3936	.3676	.3976	.3771	.5021

MACH (1) = .200 ALPHA (5) = 19.390

X/L	.050	.250	.500	.750	.950
X/LW					
.050	.4672	.4416	.4690	.4853	.5514
.500	.4416	.4387	.4579	.4589	.5316
.950	.4675	.4529	.4741	.4605	.5716

NAAL 737 OA143 ORB/B66-NOSE GEAR TOP WALL CPS (RFCM06) (14 MAY 75)

REFERENCE DATA

SREF =	2690.0000 SQ.FT.	XMRP =	1076.7000 IN.XO		
LREF =	474.8000 IN.	YMRP =	.0000 IN.YO		
BREF =	936.6800 IN.	ZMRP =	375.0000 IN.ZO		
SCALE =	.0405				

PARAMETRIC DATA

BETA =	.000	BDFLAP =	-11.700
ELEVON =	10.000	RUDDER =	.000
SPDBRK =	25.000	GRDPLN =	1.000
LNGRPS =	1.000	LNDGDR =	100.000

SECTION (1)NS GR TOP WAL CPS DEPENDENT VARIABLE CP

MACH (1) = .200 ALPHA (1) = .110

X/L	.050	.250	.500	.750	.950
X/LW					
.050	.0189	-.0142	-.0582	-.0315	.0916
.500	.0070	-.0115	-.0678	-.0422	.1498
.950	.0152	-.0030	-.0651	-.0395	.0796

MACH (1) = .200 ALPHA (2) = 5.470

X/L	.050	.250	.500	.750	.950
X/LW					
.050	.1455	.1147	.0777	.1073	.2078
.500	.1380	.1168	.0715	.0986	.2553
.950	.1448	.1320	.0732	.0976	.1995

MACH (1) = .200 ALPHA (3) = 10.840

X/L	.050	.250	.500	.750	.950
X/LW					
.050	.2756	.2526	.2238	.2464	.3319
.500	.2733	.2476	.2176	.2435	.3470
.950	.2753	.2586	.2196	.2441	.3267

MACH (1) = .200 ALPHA (4) = 16.230

X/L	.050	.250	.500	.750	.950
X/LW					
.050	.4065	.3959	.3774	.3908	.4582
.500	.4075	.3899	.3766	.3957	.4503
.950	.4065	.3952	.3782	.3947	.4539

MACH (1) = .200 ALPHA (5) = 19.450

X/L	.050	.250	.500	.750	.950
X/LW					
.050	.4872	.4773	.4688	.4766	.5349
.500	.4862	.4726	.4643	.4812	.5205
.950	.4882	.4773	.4666	.4806	.5300

NAAL 737 OA143 ORB/B66-NOSE GEAR TOP WALL CPS (RFCM07) (14 MAY 75)

REFERENCE DATA

SREF = 2690.0000 SQ.FT. XMRP = 1076.7000 IN.XO
LREF = 474.8000 IN. YMRP = .0000 IN.YO
BREF = 936.6800 IN. ZMRP = 375.0000 IN.ZO
SCALE = .0405

PARAMETRIC DATA

BETA = -4.000 BDFLAP = -11.700
ELEVON = 10.000 RUDDER = .000
SPDBRK = 25.000 GRDPLN = 1.000
LNGRPS = 1.000 LNDGDR = 100.000

SECTION (1)NS GR TOP WAL CPS DEPENDENT VARIABLE CP

MACH (1) = .200 ALPHA (1) = .130

X/L	.050	.250	.500	.750	.950
X/LW					
.050	.0029	-.0107	-.0541	-.0522	.0780
.500	-.0037	-.0284	-.0633	-.0409	.1045
.950	.0110	-.0294	-.0640	-.0283	.0969

MACH (1) = .200 ALPHA (2) = 5.470

X/L	.050	.250	.500	.750	.950
X/LW					
.050	.1295	.1187	.0805	.0776	.2081
.500	.1251	.1023	.0731	.0904	.2091
.950	.1388	.1009	.0721	.1069	.2131

MACH (1) = .200 ALPHA (3) = 10.870

X/L	.050	.250	.500	.750	.950
X/LW					
.050	.2654	.2550	.2312	.2210	.3438
.500	.2610	.2442	.2207	.2349	.3333
.950	.2748	.2459	.2167	.2520	.3346

MACH (1) = .200 ALPHA (4) = 16.240

X/L	.050	.250	.500	.750	.950
X/LW					
.050	.3968	.3881	.3989	.3776	.4856
.500	.3808	.3781	.3781	.3822	.4663
.950	.4104	.3878	.3665	.3972	.4588

MACH (1) = .200 ALPHA (5) = 19.450

X/L	.050	.250	.500	.750	.950
X/LW					
.050	.4801	.4582	.4806	.4683	.5642
.500	.4533	.4473	.4691	.4693	.5502
.950	.4873	.4622	.4628	.4793	.5389

NAAL 737 OA143 ORB/B66-NOSE GEAR TOP WALL CPS (RFCM08) (14 MAY 75)

REFERENCE DATA

SREF =	2690.0000 SQ.FT.	XMRP =	1076.7000 IN.XO		
LREF =	474.8000 IN.	YMRP =	.0000 IN.YO		
BREF =	936.6800 IN.	ZMRP =	375.0000 IN.ZO		
SCALE =	.0405				

PARAMETRIC DATA

BETA =	-8.000	BDFLAP =	-11.700
ELEVON =	10.000	RUDDER =	.000
SPDBRK =	25.000	GRDPLN =	1.000
LNGRPS =	1.000	LNDGDR =	100.000

SECTION (1)NS GR TOP WAL CPS DEPENDENT VARIABLE CP

MACH (1) = .200 ALPHA (1) = .120

X/L	.050	.250	.500	.750	.950
X/LW					
.050	-.0020	-.0247	-.0586	-.0745	.0769
.500	-.0030	-.0444	-.0722	-.0576	.0835
.950	.0023	-.0434	-.0746	-.0257	.1255

MACH (1) = .200 ALPHA (2) = 5.490

X/L	.050	.250	.500	.750	.950
X/LW					
.050	.1275	.0731	.1106	.0707	.2349
.500	.0865	.0667	.1013	.0822	.2161
.950	.1366	.0882	.0872	.1208	.2369

MACH (1) = .200 ALPHA (3) = 10.870

X/L	.050	.250	.500	.750	.950
X/LW					
.050	.2578	.2224	.2502	.2276	.3638
.500	.2030	.2117	.2378	.2243	.3408
.950	.2642	.2201	.2364	.2601	.3572

MACH (1) = .200 ALPHA (4) = 16.230

X/L	.050	.250	.500	.750	.950
X/LW					
.050	.3879	.3660	.3899	.3702	.4910
.500	.3516	.3543	.3696	.3771	.4651
.950	.3869	.3543	.3790	.4095	.4795

MACH (1) = .200 ALPHA (5) = 19.440

X/L	.050	.250	.500	.750	.950
X/LW					
.050	.4646	.4530	.4672	.4560	.5601
.500	.4390	.4350	.4550	.4613	.5411
.950	.4649	.4370	.4653	.4907	.5532

NAAL 737 OA143 ORB/B66-NOSE GEAR TOP WALL CPS (RFCM09) (14 MAY 75)

REFERENCE DATA

SREF =	2690.0000 SQ.FT.	XMRP =	1076.7000 IN.XO		
LREF =	474.8000 IN.	YMRP =	.0000 IN.YO		
BREF =	936.6800 IN.	ZMRP =	375.0000 IN.ZO		
SCALE =	.0405				

PARAMETRIC DATA

BETA =	4.000	BDFLAP =	-11.700
ELEVON =	10.000	RUDDER =	.000
SPDBRK =	25.000	GRDPLN =	1.000
LNGRPS =	1.000	LNDGDR =	100.000

SECTION (1)NS GR TOP WAL CPS DEPENDENT VARIABLE CP

MACH (1) = .200 ALPHA (1) = .110

X/L	.050	.250	.500	.750	.950
X/LW					
.050	.0228	-.0219	-.0572	-.0240	.1141
.500	.0026	-.0196	-.0647	-.0396	.1303
.950	.0110	-.0006	-.0610	-.0479	.0837

MACH (1) = .200 ALPHA (2) = 5.450

X/L	.050	.250	.500	.750	.950
X/LW					
.050	.1434	.1067	.0793	.1097	.2143
.500	.1296	.1061	.0752	.0971	.2212
.950	.1356	.1222	.0772	.0839	.2133

MACH (1) = .200 ALPHA (3) = 10.830

X/L	.050	.250	.500	.750	.950
X/LW					
.050	.2815	.2478	.2217	.2541	.3371
.500	.2645	.2471	.2214	.2364	.3374
.950	.2692	.2575	.2275	.2263	.3469

MACH (1) = .200 ALPHA (4) = 16.230

X/L	.050	.250	.500	.750	.950
X/LW					
.050	.4146	.3883	.3735	.4013	.4547
.500	.3943	.3856	.3779	.3876	.4632
.950	.4023	.3943	.3939	.3807	.4796

MACH (1) = .200 ALPHA (5) = 19.440

X/L	.050	.250	.500	.750	.950
X/LW					
.050	.4970	.4687	.4663	.4856	.5358
.500	.4598	.4548	.4681	.4768	.5453
.950	.4830	.4644	.4867	.4732	.5705

NAAL 737 OA143 ORB/B66-NOSE GEAR TOP WALL CPS (RFCM10) (14 MAY 75)

REFERENCE DATA

SREF =	2690.0000 SQ.FT.	XMRP =	1076.7000 IN.XO		
LREF =	474.8000 IN.	YMRP =	.0000 IN.YO		
BREF =	936.6800 IN.	ZMRP =	375.0000 IN.ZO		
SCALE =	.0405				

PARAMETRIC DATA

BETA =	8.000	BDFLAP =	-11.700
ELEVON =	10.000	RUDDER =	.000
SPDBRK =	25.000	GRDPLN =	1.000
LNGRPS =	1.000	LNDGDR =	100.000

SECTION (1)NS GR TOP WAL CPS DEPENDENT VARIABLE CP

MACH (1) = .200 ALPHA (1) = .110

X/L	.050	.250	.500	.750	.950
X/LW					
.050	.0195	-.0380	-.0627	-.0221	.1304
.500	-.0064	-.0383	-.0666	-.0503	.1005
.950	.0046	-.0203	-.0584	-.0666	.0866

MACH (1) = .200 ALPHA (2) = 5.430

X/L	.050	.250	.500	.750	.950
X/LW					
.050	.1504	.0905	.0987	.1327	.2452
.500	.0548	.0710	.1100	.0947	.2224
.950	.1349	.0848	.1171	.0851	.2472

MACH (1) = .200 ALPHA (3) = 10.830

X/L	.050	.250	.500	.750	.950
X/LW					
.050	.2783	.2265	.2531	.2696	.3683
.500	.2114	.2202	.2474	.2383	.3442
.950	.2725	.2302	.2601	.2429	.3739

MACH (1) = .200 ALPHA (4) = 16.230

X/L	.050	.250	.500	.750	.950
X/LW					
.050	.3947	.3597	.3870	.4128	.4857
.500	.3571	.3567	.3767	.3821	.4667
.950	.3940	.3697	.3986	.3834	.5066

MACH (1) = .200 ALPHA (5) = 19.430

X/L	.050	.250	.500	.750	.950
X/LW					
.050	.4676	.4427	.4746	.4870	.5513
.500	.4407	.4397	.4603	.4626	.5311
.950	.4709	.4530	.4732	.4626	.5722

NAAL 737 OA143 ORB/B66-NOSE GEAR TOP WALL CPS (RFCM11) (14 MAY 75)

REFERENCE DATA

SREF =	2690.0000 SQ.FT.	XMRP =	1076.7000 IN.XO		
LREF =	474.8000 IN.	YMRP =	.0000 IN.YO		
BREF =	936.6800 IN.	ZMRP =	375.0000 IN.ZO		
SCALE =	.0405				

PARAMETRIC DATA

BETA =	.000	BDFLAP =	-11.700
ELEVON =	15.000	RUDDER =	.000
SPDBRK =	25.000	GRDPLN =	1.000
LNGRPS =	1.000	LNDGDR =	100.000

SECTION (1)NS GR TOP WAL CPS DEPENDENT VARIABLE CP

MACH (1) = .200 ALPHA (1) = .190

X/L	.050	.250	.500	.750	.950
X/LW					
.050	.0202	-.0139	-.0574	-.0321	.0910
.500	.0094	-.0118	-.0656	-.0424	.1508
.950	.0155	-.0023	-.0646	-.0368	.0797

MACH (1) = .200 ALPHA (2) = 5.560

X/L	.050	.250	.500	.750	.950
X/LW					
.050	.1476	.1173	.0789	.1074	.2091
.500	.1392	.1186	.0714	.0981	.2555
.950	.1442	.1331	.0724	.0975	.1992

MACH (1) = .200 ALPHA (3) = 10.920

X/L	.050	.250	.500	.750	.950
X/LW					
.050	.2823	.2537	.2294	.2465	.3336
.500	.2786	.2507	.2218	.2482	.3462
.950	.2769	.2615	.2229	.2469	.3303

MACH (1) = .200 ALPHA (4) = 16.300

X/L	.050	.250	.500	.750	.950
X/LW					
.050	.4102	.3949	.3807	.3922	.4578
.500	.4096	.3883	.3800	.3997	.4490
.950	.4129	.3936	.3813	.3990	.4529

MACH (1) = .200 ALPHA (5) = 19.510

X/L	.050	.250	.500	.750	.950
X/LW					
.050	.4845	.4729	.4636	.4730	.5284
.500	.4845	.4680	.4607	.4778	.5183
.950	.4871	.4736	.4650	.4781	.5255

NAAL 737 OA143 ORB/B66-NOSE GEAR TOP WALL CPS (RFCM12) (14 MAY 75)

REFERENCE DATA

SREF =	2690.0000 SQ.FT.	XMRP =	1076.7000 IN.XO
LREF =	474.8000 IN.	YMRP =	.0000 IN.YO
BREF =	936.6800 IN.	ZMRP =	375.0000 IN.ZO
SCALE =	.0405		

PARAMETRIC DATA

BETA =	-4.000	BDFLAP =	-11.700
ELEVON =	15.000	RUDDER =	.000
SPDBRK =	25.000	GRDPLN =	1.000
LNGRPS =	1.000	LNDGDR =	100.000

SECTION (1)NS GR TOP WAL CPS DEPENDENT VARIABLE CP

MACH (1) = .200 ALPHA (1) = .200

X/L	.050	.250	.500	.750	.950
X/LW					
.050	.0040	-.0098	-.0543	-.0530	.0747
.500	-.0040	-.0268	-.0638	-.0414	.1061
.950	.0144	-.0288	-.0635	-.0277	.0982

MACH (1) = .200 ALPHA (2) = 5.570

X/L	.050	.250	.500	.750	.950
X/LW					
.050	.1296	.1188	.0818	.0805	.2119
.500	.1246	.1040	.0744	.0921	.2129
.950	.1381	.1027	.0703	.1077	.2146

MACH (1) = .200 ALPHA (3) = 10.970

X/L	.050	.250	.500	.750	.950
X/LW					
.050	.2637	.2553	.2286	.2247	.3468
.500	.2623	.2446	.2198	.2332	.3353
.950	.2737	.2442	.2167	.2517	.3346

MACH (1) = .200 ALPHA (4) = 16.300

X/L	.050	.250	.500	.750	.950
X/LW					
.050	.4011	.3877	.3972	.3801	.4862
.500	.3864	.3757	.3787	.3854	.4728
.950	.4124	.3860	.3720	.3972	.4636

MACH (1) = .200 ALPHA (5) = 19.500

X/L	.050	.250	.500	.750	.950
X/LW					
.050	.4804	.4585	.4813	.4732	.5645
.500	.4528	.4499	.4708	.4722	.5553
.950	.4910	.4648	.4638	.4807	.5426

NAAL 737 OA143 ORB/B66-NOSE GEAR TOP WALL CPS (RFCM13) (14 MAY 75)

REFERENCE DATA

SREF = 2690.0000 SQ.FT. XMRP = 1076.7000 IN.XO
LREF = 474.8000 IN. YMRP = .0000 IN.YO
BREF = 936.6800 IN. ZMRP = 375.0000 IN.ZO
SCALE = .0405

PARAMETRIC DATA

BETA = -8.000 BDFLAP = -11.700
ELEVON = 15.000 RUDDER = .000
SPDBRK = 25.000 GRDPLN = 1.000
LNGRPS = 1.000 LNDGDR = 100.000

SECTION (1)NS GR TOP WAL CPS DEPENDENT VARIABLE CP

MACH (1) = .200 ALPHA (1) = .210

X/L	.050	.250	.500	.750	.950
X/LW					
.050	-.0003	-.0229	-.0575	-.0744	.0774
.500	-.0017	-.0419	-.0707	-.0578	.0843
.950	.0050	-.0433	-.0728	-.0246	.1243

MACH (1) = .200 ALPHA (2) = 5.590

X/L	.050	.250	.500	.750	.950
X/LW					
.050	.1278	.0763	.1089	.0722	.2339
.500	.0777	.0689	.1083	.0837	.2177
.950	.1389	.0908	.0891	.1218	.2392

MACH (1) = .200 ALPHA (3) = 10.970

X/L	.050	.250	.500	.750	.950
X/LW					
.050	.2644	.2226	.2514	.2288	.3677
.500	.2069	.2153	.2383	.2265	.3444
.950	.2688	.2219	.2400	.2613	.3582

MACH (1) = .200 ALPHA (4) = 16.340

X/L	.050	.250	.500	.750	.950
X/LW					
.050	.3883	.3689	.3942	.3761	.4952
.500	.3539	.3552	.3753	.3807	.4693
.950	.3886	.3582	.3843	.4093	.4821

MACH (1) = .200 ALPHA (5) = 19.520

X/L	.050	.250	.500	.750	.950
X/LW					
.050	.4650	.4540	.4653	.4561	.5596
.500	.4411	.4371	.4554	.4620	.5433
.950	.4620	.4411	.4630	.4894	.5557

NAAL 737 OA143 ORB/B66-NOSE GEAR TOP WALL CPS (RFCM14) (14 MAY 75)

REFERENCE DATA

SREF =	2690.0000 SQ.FT.	XMRP =	1076.7000 IN.XO		
LREF =	474.8000 IN.	YMRP =	.0000 IN.YO		
BREF =	936.6800 IN.	ZMRP =	375.0000 IN.ZO		
SCALE =	.0405				

PARAMETRIC DATA

BETA =	4.000	BDFLAP =	-11.700
ELEVON =	15.000	RUDDER =	.000
SPDBRK =	25.000	GRDPLN =	1.000
LNGRPS =	1.000	LNDGDR =	100.000

SECTION (1)NS GR TOP WAL CPS DEPENDENT VARIABLE CP

MACH (1) = .200 ALPHA (1) = .170

X/L	.050	.250	.500	.750	.950
X/LW					
.050	.0222	-.0213	-.0550	-.0231	.1175
.500	.0040	-.0189	-.0642	-.0387	.1287
.950	.0138	-.0003	-.0622	-.0487	.0826

MACH (1) = .200 ALPHA (2) = 5.550

X/L	.050	.250	.500	.750	.950
X/LW					
.050	.1480	.1090	.0804	.1125	.2196
.500	.1281	.1113	.0753	.0956	.2223
.950	.1372	.1251	.0783	.0861	.2177

MACH (1) = .200 ALPHA (3) = 10.910

X/L	.050	.250	.500	.750	.950
X/LW					
.050	.2834	.2494	.2268	.2571	.3393
.500	.2662	.2468	.2232	.2423	.3396
.950	.2726	.2599	.2263	.2298	.3499

MACH (1) = .200 ALPHA (4) = 16.300

X/L	.050	.250	.500	.750	.950
X/LW					
.050	.4157	.3895	.3744	.4015	.4547
.500	.3955	.3835	.3799	.3878	.4641
.950	.4005	.3958	.3975	.3819	.4798

MACH (1) = .200 ALPHA (5) = 19.500

X/L	.050	.250	.500	.750	.950
X/LW					
.050	.4951	.4698	.4710	.4863	.5400
.500	.4665	.4605	.4768	.4759	.5468
.950	.4851	.4705	.4895	.4733	.5694

NAAL 737 OA143 ORB/B66-NOSE GEAR TOP WALL CPS (RFCM15) (14 MAY 75)

REFERENCE DATA

SREF = 2690.0000 SQ.FT. XMRP = 1076.7000 IN.XO
LREF = 474.8000 IN. YMRP = .0000 IN.YO
BREF = 936.6800 IN. ZMRP = 375.0000 IN.ZO
SCALE = .0405

PARAMETRIC DATA

BETA = 8.000 BDFLAP = -11.700
ELEVON = 15.000 RUDDER = .000
SPDBRK = 25.000 GRDPLN = 1.000
LNGRPS = 1.000 LNDGDR = 100.000

SECTION (1)NS GR TOP WAL CPS DEPENDENT VARIABLE CP

MACH (1) = .200 ALPHA (1) = .200

X/L X/LW	.050	.250	.500	.750	.950
.050	.0221	-.0379	-.0611	-.0227	.1326
.500	-.0054	-.0379	-.0660	-.0499	.1002
.950	.0060	-.0223	-.0572	-.0648	.0893

MACH (1) = .200 ALPHA (2) = 5.550

X/L X/LW	.050	.250	.500	.750	.950
.050	.1546	.0922	.1070	.1335	.2447
.500	.0815	.0767	.1182	.0938	.2225
.950	.1387	.0845	.1192	.0928	.2460

MACH (1) = .200 ALPHA (3) = 10.930

X/L X/LW	.050	.250	.500	.750	.950
.050	.2765	.2267	.2528	.2673	.3647
.500	.2074	.2197	.2444	.2380	.3464
.950	.2705	.2314	.2588	.2433	.3785

MACH (1) = .200 ALPHA (4) = 16.300

X/L X/LW	.050	.250	.500	.750	.950
.050	.3977	.3624	.3962	.4162	.4896
.500	.3577	.3574	.3820	.3857	.4650
.950	.3997	.3717	.4051	.3831	.5089

MACH (1) = .200 ALPHA (5) = 19.510

X/L X/LW	.050	.250	.500	.750	.950
.050	.4692	.4437	.4719	.4891	.5496
.500	.4450	.4417	.4592	.4628	.5314
.950	.4735	.4543	.4738	.4631	.5714

NAAL 737 OA143 ORB/B66-NOSE GEAR TOP WALL CPS (RFCM16) (14 MAY 75)

REFERENCE DATA

SREF = 2690.0000 SQ.FT. XMRP = 1076.7000 IN.XO
LREF = 474.8000 IN. YMRP = .0000 IN.YO
BREF = 936.6800 IN. ZMRP = 375.0000 IN.ZO
SCALE = .0405

PARAMETRIC DATA

BETA = .000 BDFLAP = -11.700
ELEVON = 15.000 RUDDER = .000
SPDBRK = 25.000 GRDPLN = .000
LNGRPS = 1.000 LNDGDR = 100.000

SECTION (1)NS GR TOP WAL CPS DEPENDENT VARIABLE CP

MACH (1) = .230 ALPHA (1) = .120

X/L	.050	.250	.500	.750	.950
X/LW					
.050	-.0223	-.0555	-.0983	-.0706	.0540
.500	-.0320	-.0527	-.1082	-.0816	.1096
.950	-.0262	-.0455	-.1065	-.0803	.0408

MACH (1) = .230 ALPHA (2) = 5.370

X/L	.050	.250	.500	.750	.950
X/LW					
.050	.1119	.0822	.0448	.0699	.1741
.500	.1054	.0841	.0356	.0664	.2221
.950	.1111	.0956	.0356	.0661	.1693

MACH (1) = .230 ALPHA (3) = 10.620

X/L	.050	.250	.500	.750	.950
X/LW					
.050	.2481	.2232	.1981	.2162	.3095
.500	.2467	.2197	.1915	.2197	.3180
.950	.2489	.2291	.1934	.2175	.2981

MACH (1) = .230 ALPHA (4) = 15.880

X/L	.050	.250	.500	.750	.950
X/LW					
.050	.3868	.3756	.3558	.3694	.4408
.500	.3859	.3655	.3530	.3726	.4328
.950	.3868	.3718	.3500	.3753	.4368

MACH (1) = .230 ALPHA (5) = 19.030

X/L	.050	.250	.500	.750	.950
X/LW					
.050	.4620	.4531	.4480	.4541	.5193
.500	.4631	.4477	.4417	.4581	.5049
.950	.4669	.4580	.4422	.4599	.5065

NAAL 737 OA143 ORB/B66-NOSE GEAR TOP WALL CPS (RFCM17) (14 MAY 75)

REFERENCE DATA

SREF = 2690.0000 SQ.FT. XMRP = 1076.7000 IN.XO
LREF = 474.8000 IN. YMRP = .0000 IN.YO
BREF = 936.6800 IN. ZMRP = 375.0000 IN.ZO
SCALE = .0405

PARAMETRIC DATA

BETA = -4.000 BDFLAP = -11.700
ELEVON = 15.000 RUDDER = .000
SPDBRK = 25.000 GRDPLN = .000
LNGRPS = 1.000 LNDGDR = 100.000

SECTION (1)NS GR TOP WAL CPS DEPENDENT VARIABLE CP

MACH (1) = .230 ALPHA (1) = .130

X/L	.050	.250	.500	.750	.950
X/LW					
.050	-.0385	-.0514	-.0966	-.0940	.0269
.500	-.0473	-.0704	-.1072	-.0856	.0761
.950	-.0272	-.0753	-.1094	-.0714	.0689

MACH (1) = .230 ALPHA (2) = 5.410

X/L	.050	.250	.500	.750	.950
X/LW					
.050	.0995	.0863	.0468	.0455	.1795
.500	.0929	.0702	.0393	.0557	.1829
.950	.1069	.0686	.0379	.0731	.1856

MACH (1) = .230 ALPHA (3) = 10.640

X/L	.050	.250	.500	.750	.950
X/LW					
.050	.2388	.2263	.1973	.1922	.3242
.500	.2331	.2154	.1912	.2070	.3135
.950	.2489	.2176	.1885	.2257	.3127

MACH (1) = .230 ALPHA (4) = 15.910

X/L	.050	.250	.500	.750	.950
X/LW					
.050	.3754	.3639	.3713	.3563	.4759
.500	.3544	.3514	.3574	.3646	.4571
.950	.3887	.3644	.3459	.3786	.4483

MACH (1) = .230 ALPHA (5) = 19.060

X/L	.050	.250	.500	.750	.950
X/LW					
.050	.4603	.4397	.4579	.4508	.5471
.500	.4313	.4291	.4643	.4526	.5362
.950	.4703	.4435	.4573	.4614	.5253

NAAL 737 OA143 OR8/B66-NOSE GEAR TOP WALL CPS (RFCM18) (14 MAY 75)

REFERENCE DATA

SREF = 2690.0000 SQ.FT. XMRP = 1076.7000 IN.XO
LREF = 474.8000 IN. YMRP = .0000 IN.YO
BREF = 936.6800 IN. ZMRP = 375.0000 IN.ZO
SCALE = .0405

PARAMETRIC DATA

BETA = -8.000 BDFLAP = -11.700
ELEVON = 15.000 RUDDER = .000
SPDBRK = 25.000 GRDPLN = .000
LNGRPS = 1.000 LNDGDR = 100.000

SECTION (1)NS GR TOP WAL CPS DEPENDENT VARIABLE CP

MACH (1) = .230 ALPHA (1) = .140

X/L	.050	.250	.500	.750	.950
X/LW					
.050	-.0390	-.0591	-.0988	-.1111	.0344
.500	-.0420	-.0822	-.1143	-.0963	.0508
.950	-.0401	-.0844	-.1165	-.0662	.0901

MACH (1) = .230 ALPHA (2) = 5.420

X/L	.050	.250	.500	.750	.950
X/LW					
.050	.0951	.0464	.0712	.0367	.2058
.500	.0360	.0368	.0664	.0535	.1845
.950	.1066	.0617	.0546	.0909	.2090

MACH (1) = .230 ALPHA (3) = 10.650

X/L	.050	.250	.500	.750	.950
X/LW					
.050	.2385	.1968	.2237	.2031	.3425
.500	.1797	.1870	.2112	.2023	.3229
.950	.2387	.1955	.2118	.2376	.3366

MACH (1) = .230 ALPHA (4) = 15.920

X/L	.050	.250	.500	.750	.950
X/LW					
.050	.3655	.3448	.3672	.3504	.4771
.500	.3301	.3320	.3524	.3563	.4507
.950	.3652	.3315	.3592	.3892	.4683

MACH (1) = .230 ALPHA (5) = 19.070

X/L	.050	.250	.500	.750	.950
X/LW					
.050	.4453	.4368	.4438	.4379	.5459
.500	.4178	.4159	.4341	.4390	.5262
.950	.4445	.4200	.4436	.4694	.5406

NAAL 737 OA143 ORB/B66-NOSE GEAR TOP WALL CPS (RFCM19) (14 MAY 75)

REFERENCE DATA

SREF =	2690.0000 SQ.FT.	XMRP =	1076.7000 IN.XO		
LREF =	474.8000 IN.	YMRP =	.0000 IN.YO		
BREF =	936.6800 IN.	ZMRP =	375.0000 IN.ZO		
SCALE =	.0405				

PARAMETRIC DATA

BETA =	4.000	BDFLAP =	-11.700
ELEVON =	15.000	RUDDER =	.000
SPDBRK =	25.000	GRDPLN =	.000
LNGRPS =	1.000	LNDGDR =	100.000

SECTION (1)NS GR TOP WAL CPS DEPENDENT VARIABLE CP

MACH (1) = .230 ALPHA (1) = .150

X/L	.050	.250	.500	.750	.950
X/LW					
.050	-.0167	-.0608	-.1008	-.0652	.0846
.500	-.0369	-.0586	-.1089	-.0804	.1052
.950	-.0268	-.0380	-.1032	-.0882	.0364

MACH (1) = .230 ALPHA (2) = 5.360

X/L	.050	.250	.500	.750	.950
X/LW					
.050	.1138	.0738	.0453	.0763	.1874
.500	.0979	.0766	.0385	.0608	.1957
.950	.1034	.0916	.0435	.0496	.1839

MACH (1) = .230 ALPHA (3) = 10.620

X/L	.050	.250	.500	.750	.950
X/LW					
.050	.2554	.2217	.2006	.2308	.3128
.500	.2383	.2209	.1940	.2142	.3174
.950	.2446	.2323	.1978	.2000	.3297

MACH (1) = .230 ALPHA (4) = 15.860

X/L	.050	.250	.500	.750	.950
X/LW					
.050	.3943	.3680	.3519	.3780	.4336
.500	.3721	.3610	.3548	.3663	.4442
.950	.3800	.3735	.3662	.3583	.4637

MACH (1) = .230 ALPHA (5) = 19.040

X/L	.050	.250	.500	.750	.950
X/LW					
.050	.4763	.4506	.4463	.4644	.5133
.500	.4463	.4398	.4544	.4572	.5263
.950	.4641	.4490	.4709	.4540	.5513

NAAL 737 OA143 ORB/B66-NOSE GEAR TOP WALL CPS (RFCM20) (14 MAY 75)

REFERENCE DATA

SREF =	2690.0000 SQ.FT.	XMRP =	1076.7000 IN.XO		
LREF =	474.8000 IN.	YMRP =	.0000 IN.YO		
BREF =	936.6800 IN.	ZMRP =	375.0000 IN.ZO		
SCALE =	.0405				

PARAMETRIC DATA

BETA =	8.000	BDFLAP =	-11.700
ELEVON =	15.000	RUDDER =	.000
SPDBRK =	25.000	GRDPLN =	.000
LNGRPS =	1.000	LNDGDR =	100.000

SECTION (1)NS GR TOP WAL CPS DEPENDENT VARIABLE CP

MACH (1) = .230 ALPHA (1) = .130

X/L	.050	.250	.500	.750	.950
X/LW					
.050	-.0183	-.0816	-.1039	-.0647	.1006
.500	-.0467	-.0775	-.1103	-.0903	.0753
.950	-.0341	-.0548	-.1026	-.1050	.0366

MACH (1) = .230 ALPHA (2) = 5.350

X/L	.050	.250	.500	.750	.950
X/LW					
.050	.1207	.0608	.0741	.0897	.2135
.500	.0381	.0403	.0729	.0644	.1924
.950	.1042	.0570	.0751	.0510	.2132

MACH (1) = .230 ALPHA (3) = 10.610

X/L	.050	.250	.500	.750	.950
X/LW					
.050	.2540	.2012	.2281	.2435	.3382
.500	.1801	.1928	.2239	.2124	.3228
.950	.2491	.2047	.2342	.2185	.3518

MACH (1) = .230 ALPHA (4) = 15.840

X/L	.050	.250	.500	.750	.950
X/LW					
.050	.3808	.3381	.3737	.3962	.4740
.500	.3373	.3370	.3601	.3644	.4523
.950	.3803	.3509	.3819	.3671	.4905

MACH (1) = .230 ALPHA (5) = 19.010

X/L	.050	.250	.500	.750	.950
X/LW					
.050	.4553	.4281	.4587	.4755	.5439
.500	.4235	.4257	.4479	.4501	.5225
.950	.4575	.4409	.4615	.4488	.5602

NAAL 737 OA143 ORB/B66-NOSE GEAR TOP WALL CPS (RFCM21) (14 MAY 75)

REFERENCE DATA

SREF =	2690.0000 SQ.FT.	XMRP =	1076.7000 IN.XO		
LREF =	474.8000 IN.	YMRP =	.0000 IN.YO		
BREF =	936.6800 IN.	ZMRP =	375.0000 IN.ZO		
SCALE =	.0405				

PARAMETRIC DATA

BETA =	.000	BDFLAP =	-11.700
ELEVON =	10.000	RUDDER =	.000
SPDBRK =	25.000	GRDPLN =	.000
LNGRPS =	1.000	LNDGDR =	100.000

SECTION (1)NS GR TOP WAL CPS DEPENDENT VARIABLE CP

MACH (1) = .230 ALPHA (1) = .080

X/L	.050	.250	.500	.750	.950
X/LW					
.050	-.0260	-.0580	-.1011	-.0746	.0472
.500	-.0353	-.0542	-.1101	-.0858	.1045
.950	-.0293	-.0468	-.1095	-.0807	.0383

MACH (1) = .230 ALPHA (2) = 5.340

X/L	.050	.250	.500	.750	.950
X/LW					
.050	.1115	.0811	.0443	.0687	.1777
.500	.1013	.0830	.0339	.0628	.2194
.950	.1098	.0989	.0388	.0638	.1676

MACH (1) = .230 ALPHA (3) = 10.550

X/L	.050	.250	.500	.750	.950
X/LW					
.050	.2480	.2209	.1948	.2132	.3031
.500	.2455	.2185	.1890	.2177	.3116
.950	.2472	.2282	.1895	.2171	.2948

MACH (1) = .230 ALPHA (4) = 15.810

X/L	.050	.250	.500	.750	.950
X/LW					
.050	.3848	.3744	.3513	.3634	.4393
.500	.3878	.3656	.3501	.3707	.4302
.950	.3869	.3719	.3506	.3709	.4372

MACH (1) = .230 ALPHA (5) = 18.980

X/L	.050	.250	.500	.750	.950
X/LW					
.050	.4614	.4549	.4420	.4551	.5226
.500	.4633	.4508	.4407	.4604	.5087
.950	.4649	.4546	.4418	.4625	.5109

NAAL 737 OA143 ORB/B66-NOSE GEAR TOP WALL CPS (RFCM22) (14 MAY 75)

REFERENCE DATA

SREF =	2690.0000 SQ.FT.	XMRP =	1076.7000 IN.XO		
LREF =	474.8000 IN.	YMRP =	.0000 IN.YO		
BREF =	936.6800 IN.	ZMRP =	375.0000 IN.ZO		
SCALE =	.0405				

PARAMETRIC DATA

BETA =	-4.000	BDFLAP =	-11.700
ELEVON =	10.000	RUDDER =	.000
SPDBRK =	25.000	GRDPLN =	.000
LNGRPS =	1.000	LNDGDR =	100.000

SECTION (1)NS OR TOP WAL CPS DEPENDENT VARIABLE CP

MACH (1) = .230 ALPHA (1) = .090

X/L	.050	.250	.500	.750	.950
X/LW					
.050	-.0341	-.0523	-.1002	-.0948	.0275
.500	-.0460	-.0713	-.1095	-.0881	.0765
.950	-.0297	-.0748	-.1081	-.0733	.0649

MACH (1) = .230 ALPHA (2) = 5.300

X/L	.050	.250	.500	.750	.950
X/LW					
.050	.0949	.0845	.0457	.0433	.1794
.500	.0911	.0697	.0373	.0556	.1788
.950	.1045	.0672	.0337	.0717	.1818

MACH (1) = .230 ALPHA (3) = 10.570

X/L	.050	.250	.500	.750	.950
X/LW					
.050	.2334	.2237	.1986	.1928	.3209
.500	.2297	.2118	.1902	.2032	.3081
.950	.2443	.2145	.1880	.2220	.3103

MACH (1) = .230 ALPHA (4) = 15.810

X/L	.050	.250	.500	.750	.950
X/LW					
.050	.3718	.3610	.3702	.3535	.4656
.500	.3574	.3482	.3566	.3574	.4520
.950	.3859	.3596	.3417	.3742	.4408

MACH (1) = .230 ALPHA (5) = 18.980

X/L	.050	.250	.500	.750	.950
X/LW					
.050	.4582	.4389	.4586	.4482	.5480
.500	.4314	.4281	.4495	.4498	.5326
.950	.4717	.4400	.4425	.4612	.5233

NAAL 737 OA143 ORB/B66-NOSE GEAR TOP WALL CPS (RFCM23) (14 MAY 75)

REFERENCE DATA

SREF = 2690.0000 SQ.FT. XMRP = 1076.7000 IN.XO
LREF = 474.8000 IN. YMRP = .0000 IN.YO
BREF = 936.6800 IN. ZMRP = 375.0000 IN.ZO
SCALE = .0405

PARAMETRIC DATA

BETA = -8.000 BDFLAP = -11.700
ELEVON = 10.000 RUDDER = .000
SPDBRK = 25.000 GRDPLN = .000
LNGRPS = 1.000 LNDGDR = 100.000

SECTION (1)NS GR TOP WAL CPS DEPENDENT VARIABLE CP

MACH (1) = .230 ALPHA (1) = .100

X/L	.050	.250	.500	.750	.950
X/LW					
.050	-.0421	-.0608	-.0986	-.1121	.0315
.500	-.0410	-.0815	-.1148	-.0973	.0512
.950	-.0385	-.0867	-.1145	-.0680	.0889

MACH (1) = .230 ALPHA (2) = 5.320

X/L	.050	.250	.500	.750	.950
X/LW					
.050	.0931	.0439	.0739	.0366	.2036
.500	.0447	.0433	.0681	.0514	.1889
.950	.1049	.0604	.0510	.0933	.2065

MACH (1) = .230 ALPHA (3) = 10.590

X/L	.050	.250	.500	.750	.950
X/LW					
.050	.2370	.1973	.2276	.2041	.3428
.500	.1813	.1876	.2107	.1993	.3217
.950	.2406	.1971	.2145	.2349	.3342

MACH (1) = .230 ALPHA (4) = 15.850

X/L	.050	.250	.500	.750	.950
X/LW					
.050	.3677	.3455	.3694	.3529	.4783
.500	.3303	.3283	.3506	.3524	.4564
.950	.3658	.3308	.3588	.3876	.4663

MACH (1) = .230 ALPHA (5) = 19.010

X/L	.050	.250	.500	.750	.950
X/LW					
.050	.4434	.4317	.4448	.4382	.5458
.500	.4166	.4144	.4339	.4366	.5261
.950	.4399	.4206	.4404	.4693	.5407

NAAL 737 OA143 ORB/B66-NOSE GEAR TOP WALL CPS (RFCM24) (14 MAY 75)

REFERENCE DATA

SREF =	2690.0000 SQ.FT.	XMRP =	1076.7000 IN.XO		
LREF =	474.8000 IN.	YMRP =	.0000 IN.YO		
BREF =	936.6800 IN.	ZMRP =	375.0000 IN.ZO		
SCALE =	.0405				

PARAMETRIC DATA

BETA =	4.000	BDFLAP =	-11.700
ELEVON =	10.000	RUDDER =	.000
SPDBRK =	25.000	GRDPLN =	.000
LNGRPS =	1.000	LNDGDR =	100.000

SECTION (1)NS GR TOP WAL CPS DEPENDENT VARIABLE CP

MACH (1) = .230 ALPHA (1) = .070

X/L	.050	.250	.500	.750	.950
X/LW					
.050	-.0174	-.0674	-.1044	-.0695	.0859
.500	-.0425	-.0608	-.1107	-.0844	.0971
.950	-.0292	-.0401	-.1058	-.0889	.0310

MACH (1) = .230 ALPHA (2) = 5.290

X/L	.050	.250	.500	.750	.950
X/LW					
.050	.1117	.0733	.0408	.0761	.1894
.500	.0966	.0723	.0333	.0592	.1947
.950	.1016	.0909	.0435	.0475	.1793

MACH (1) = .230 ALPHA (3) = 10.530

X/L	.050	.250	.500	.750	.950
X/LW					
.050	.2515	.2181	.1953	.2253	.3132
.500	.2352	.2179	.1897	.2115	.3113
.950	.2425	.2284	.1948	.1982	.3228

MACH (1) = .230 ALPHA (4) = 15.790

X/L	.050	.250	.500	.750	.950
X/LW					
.050	.3916	.3663	.3505	.3771	.4353
.500	.3737	.3604	.3520	.3638	.4443
.950	.3826	.3701	.3720	.3579	.4630

MACH (1) = .230 ALPHA (5) = 18.950

X/L	.050	.250	.500	.750	.950
X/LW					
.050	.4718	.4470	.4440	.4602	.5111
.500	.4426	.4297	.4478	.4512	.5273
.950	.4580	.4416	.4642	.4478	.5466

NAAL 737 OA143 ORB/B66-NOSE GEAR TOP WALL CPS (RFCM25) (14 MAY 75)

REFERENCE DATA

SREF =	2690.0000 SQ.FT.	XMRP =	1076.7000 IN.XO		
LREF =	474.8000 IN.	YMRP =	.0000 IN.YO		
BREF =	936.6800 IN.	ZMRP =	375.0000 IN.ZO		
SCALE =	.0405				

PARAMETRIC DATA

BETA =	8.000	BDFLAP =	-11.700
ELEVON =	10.000	RUDDER =	.000
SPDBRK =	25.000	GRDPLN =	.000
LNGRPS =	1.000	LNDGDR =	100.000

SECTION (1)NS GR TOP WAL CPS DEPENDENT VARIABLE CP

MACH (1) = .230 ALPHA (1) = .100

X/L	.050	.250	.500	.750	.950
X/LW					
.050	-.0175	-.0798	-.1022	-.0671	.0984
.500	-.0452	-.0762	-.1110	-.0910	.0735
.950	-.0326	-.0554	-.1052	-.1060	.0381

MACH (1) = .230 ALPHA (2) = 5.310

X/L	.050	.250	.500	.750	.950
X/LW					
.050	.1218	.0648	.0692	.0966	.2121
.500	.0335	.0398	.0734	.0630	.1920
.950	.1028	.0566	.0879	.0592	.2111

MACH (1) = .230 ALPHA (3) = 10.550

X/L	.050	.250	.500	.750	.950
X/LW					
.050	.2533	.1999	.2278	.2455	.3410
.500	.1776	.1931	.2217	.2099	.3220
.950	.2486	.2018	.2356	.2206	.3482

MACH (1) = .230 ALPHA (4) = 15.830

X/L	.050	.250	.500	.750	.950
X/LW					
.050	.3783	.3384	.3718	.3924	.4679
.500	.3343	.3338	.3607	.3625	.4471
.950	.3794	.3460	.3819	.3625	.4845

MACH (1) = .230 ALPHA (5) = 18.970

X/L	.050	.250	.500	.750	.950
X/LW					
.050	.4524	.4248	.4551	.4761	.5411
.500	.4231	.4229	.4459	.4481	.5206
.950	.4554	.4370	.4608	.4471	.5595

NAAL 737 OA143 ORB/B65-NOSE GEAR TOP WALL CPS (RFCM26) (14 MAY 75)

REFERENCE DATA

SREF =	2690.0000 SQ.FT.	XMRP =	1076.7000 IN.XO		
LREF =	474.8000 IN.	YMRP =	.0000 IN.YO		
BREF =	936.6800 IN.	ZMRP =	375.0000 IN.ZO		
SCALE =	.0405				

PARAMETRIC DATA

BETA =	8.000	BDFLAP =	-11.700
ELEVON =	10.000	RUDDER =	.000
SPDBRK =	25.000	GRDPLN =	.000
LNGRPS =	.000	LNDGDR =	.000

SECTION (1)NS GR TOP WAL CPS DEPENDENT VARIABLE CP

MACH (1) = .230 ALPHA (1) = .070

X/L	.050	.250	.500	.750	.950
X/LW					
.050	-.1485	-.1468	-.1493	-.1461	-.1482
.500	-.1509	-.1496	-.1504	-.1472	-.1474
.950	-.1441	-.1509	-.1498	-.1477	-.1458

MACH (1) = .230 ALPHA (2) = 5.330

X/L	.050	.250	.500	.750	.950
X/LW					
.050	-.0368	-.0357	-.0359	-.0334	-.0324
.500	-.0354	-.0376	-.0357	-.0348	-.0326
.950	-.0244	-.0376	-.0352	-.0356	-.0348

MACH (1) = .230 ALPHA (3) = 10.570

X/L	.050	.250	.500	.750	.950
X/LW					
.050	.0858	.0872	.0883	.0889	.0897
.500	.0877	.0872	.0850	.0883	.0873
.950	.0968	.0866	.0861	.0873	.0886

MACH (1) = .230 ALPHA (4) = 15.850

X/L	.050	.250	.500	.750	.950
X/LW					
.050	.2134	.2118	.2111	.2137	.2148
.500	.2261	.2112	.2120	.2135	.2137
.950	.2226	.2147	.2161	.2127	.2121

MACH (1) = .230 ALPHA (5) = 19.010

X/L	.050	.250	.500	.750	.950
X/LW					
.050	.2851	.2838	.2866	.2861	.2853
.500	.3081	.2865	.2860	.2882	.2845
.950	.2935	.2884	.2849	.2877	.2869

NAAL 737 OA143 ORB/B66-NOSE GEAR TOP WALL CPS (RFCM27) (14 MAY 75)

REFERENCE DATA

SREF = 2690.0000 SQ.FT. XMRP = 1076.7000 IN.XO
LREF = 474.8000 IN. YMRP = .0000 IN.YO
BREF = 936.6800 IN. ZMRP = 375.0000 IN.ZO
SCALE = .0405

PARAMETRIC DATA

BETA = 8.000 BDFLAP = -11.700
ELEVON = 10.000 RUDDER = .000
SPDBRK = 25.000 GRDPLN = .000
LNGRPS = .000 LNDGDR = 40.000

SECTION (1)NS GR TOP WAL CPS DEPENDENT VARIABLE CP

MACH (1) = .230 ALPHA (1) = .080

X/L	.050	.250	.500	.750	.950
X/LW					
.050	-.1302	-.1719	-.1578	-.1552	-.0798
.500	-.1563	-.1664	-.1695	-.1875	-.0854
.950	-.1494	-.1544	-.1708	-.1843	-.0009

MACH (1) = .230 ALPHA (2) = 5.320

X/L	.050	.250	.500	.750	.950
X/LW					
.050	-.0124	-.0530	-.0375	-.0257	.0691
.500	-.0473	-.0456	-.0484	-.0579	.0422
.950	-.0220	-.0429	-.0484	-.0520	.1291

MACH (1) = .230 ALPHA (3) = 10.550

X/L	.050	.250	.500	.750	.950
X/LW					
.050	.1226	.0828	.0975	.1149	.2098
.500	.0889	.0853	.0880	.0846	.1857
.950	.1114	.0921	.0910	.0886	.2665

MACH (1) = .230 ALPHA (4) = 15.820

X/L	.050	.250	.500	.750	.950
X/LW					
.050	.2614	.2229	.2438	.2582	.3533
.500	.2277	.2288	.2332	.2252	.3286
.950	.2511	.2313	.2524	.2313	.4050

MACH (1) = .230 ALPHA (5) = 18.970

X/L	.050	.250	.500	.750	.950
X/LW					
.050	.3259	.3089	.3376	.3406	.4336
.500	.3057	.3097	.3289	.2986	.4198
.950	.3224	.3181	.3384	.3132	.5149

NAAL 737 OA143 ORB/B66-NOSE GEAR TOP WALL CPS (RFCM29) (14 MAY 75)

REFERENCE DATA

SREF =	2690.0000 SQ.FT.	XMRP =	1076.7000 IN.XO		
LREF =	474.8000 IN.	YMRP =	.0000 IN.YO		
BREF =	936.6800 IN.	ZMRP =	375.0000 IN.ZO		
SCALE =	.0405				

PARAMETRIC DATA

BETA =	8.000	BOFLAP =	-11.700
ELEVON =	10.000	RUDDER =	.000
SPDBRK =	25.000	GRDPLN =	.000
LNGRPS =	.000	LNDGDR =	80.000

SECTION (1)NS GR TOP WAL CPS DEPENDENT VARIABLE CP

MACH (1) = .230 ALPHA (1) = .090

X/L	.050	.250	.500	.750	.950
X/LW					
.050	-.0776	-.1310	-.1172	-.1036	.0027
.500	-.1063	-.1209	-.1296	-.1569	-.0125
.950	-.0913	-.0989	-.1338	-.1521	.1051

MACH (1) = .230 ALPHA (2) = 5.330

X/L	.050	.250	.500	.750	.950
X/LW					
.050	.0629	.0114	.0247	.0423	.1479
.500	.0265	.0210	.0120	-.0116	.1393
.950	.0457	.0333	.0089	-.0066	.2590

MACH (1) = .230 ALPHA (3) = 10.560

X/L	.050	.250	.500	.750	.950
X/LW					
.050	.1988	.1521	.1681	.2153	.3381
.500	.1576	.1576	.1480	.1633	.3020
.950	.1920	.1672	.1400	.1850	.4147

MACH (1) = .230 ALPHA (4) = 15.810

X/L	.050	.250	.500	.750	.950
X/LW					
.050	.3347	.2959	.3181	.3565	.4712
.500	.3011	.2992	.2975	.3066	.4376
.950	.3315	.3016	.3079	.3301	.5478

MACH (1) = .230 ALPHA (5) = 18.970

X/L	.050	.250	.500	.750	.950
X/LW					
.050	.4098	.3767	.4102	.4441	.5477
.500	.3781	.3767	.3879	.3897	.5128
.950	.4085	.3803	.4139	.4169	.6204

NAAL 737 OA143 ORB/B66-NOSE GEAR TOP WALL CPS (RFCM30) (14 MAY 75)

REFERENCE DATA

SREF = 2690.0000 SQ.FT. XMRP = 1076.7000 IN.XO
LREF = 474.8000 IN. YMRP = .0000 IN.YO
BREF = 936.6800 IN. ZMRP = 375.0000 IN.ZO
SCALE = .0405

PARAMETRIC DATA

BETA = .000 BDFLAP = -11.700
ELEVON = 5.000 RUDDER = .000
SPDBRK = 25.000 GRDPLN = .000
LNGRPS = 1.000 LNDGDR = 100.000

SECTION (1)NS GR TOP WAL CPS DEPENDENT VARIABLE CP

MACH (1) = .230 ALPHA (1) = .010

X/L	.050	.250	.500	.750	.950
X/LW					
.050	-.0313	-.0647	-.1015	-.0755	.0400
.500	-.0436	-.0601	-.1114	-.0865	.0929
.950	-.0387	-.0557	-.1114	-.0830	.0338

MACH (1) = .230 ALPHA (2) = 5.240

X/L	.050	.250	.500	.750	.950
X/LW					
.050	.1100	.0783	.0449	.0703	.1696
.500	.0955	.0824	.0308	.0601	.2154
.950	.1034	.0933	.0352	.0612	.1614

MACH (1) = .230 ALPHA (3) = 10.470

X/L	.050	.250	.500	.750	.950
X/LW					
.050	.2458	.2192	.1936	.2160	.3033
.500	.2436	.2192	.1858	.2141	.3145
.950	.2433	.2328	.1858	.2115	.2926

MACH (1) = .230 ALPHA (4) = 15.730

X/L	.050	.250	.500	.750	.950
X/LW					
.050	.3888	.3694	.3537	.3660	.4378
.500	.3874	.3647	.3508	.3708	.4260
.950	.3871	.3754	.3517	.3681	.4298

MACH (1) = .230 ALPHA (5) = 18.890

X/L	.050	.250	.500	.750	.950
X/LW					
.050	.4676	.4561	.4451	.4504	.5144
.500	.4749	.4493	.4450	.4561	.5010
.950	.4728	.4580	.4414	.4531	.5043

NAAL 737 OA143 ORB/B66-NOSE GEAR TOP WALL CPS (RFCM31) (14 MAY 75)

REFERENCE DATA

SREF = 2690.0000 SQ.FT. XMRP = 1076.7000 IN.XO
LREF = 474.8000 IN. YMRP = .0000 IN.YO
BREF = 936.6800 IN. ZMRP = 375.0000 IN.ZO
SCALE = .0405

PARAMETRIC DATA

BETA = -4.000 BDFLAP = -11.700
ELEVON = 5.000 RUDDER = .000
SPDBRK = 25.000 GRDPLN = .000
LNGRPS = 1.000 LNDGDR = 100.000

SECTION (1)NS GR TOP WAL CPS DEPENDENT VARIABLE CP

MACH (1) = .230 ALPHA (1) = .000

X/L	.050	.250	.500	.750	.950
X/LW					
.050	-.0466	-.0582	-.1010	-.0948	.0167
.500	-.0584	-.0779	-.1125	-.0881	.0577
.950	-.0359	-.0804	-.1122	-.0755	.0575

MACH (1) = .230 ALPHA (2) = 5.250

X/L	.050	.250	.500	.750	.950
X/LW					
.050	.0942	.0819	.0451	.0432	.1794
.500	.0816	.0676	.0334	.0566	.1727
.950	.1003	.0704	.0331	.0708	.1791

MACH (1) = .230 ALPHA (3) = 10.480

X/L	.050	.250	.500	.750	.950
X/LW					
.050	.2349	.2273	.1956	.1940	.3200
.500	.2287	.2137	.1881	.2063	.3034
.950	.2431	.2170	.1854	.2210	.3034

MACH (1) = .230 ALPHA (4) = 15.760

X/L	.050	.250	.500	.750	.950
X/LW					
.050	.3708	.3648	.3655	.3524	.4611
.500	.3632	.3553	.3488	.3575	.4434
.950	.3865	.3586	.3458	.3722	.4397

MACH (1) = .230 ALPHA (5) = 18.910

X/L	.050	.250	.500	.750	.950
X/LW					
.050	.4560	.4416	.4583	.4500	.5481
.500	.4289	.4318	.4514	.4527	.5377
.950	.4671	.4446	.4408	.4617	.5249

NAAL 737 OA143 ORB/B66-NOSE GEAR TOP WALL CPS (RFCM32) (14 MAY 75)

REFERENCE DATA

SREF = 2690.0000 SQ.FT. XMRP = 1076.7000 IN.XO
LREF = 474.8000 IN. YMRP = .0000 IN.YO
BREF = 936.6800 IN. ZMRP = 375.0000 IN.ZO
SCALE = .0405

PARAMETRIC DATA

BETA = -8.000 BDFLAP = -11.700
ELEVON = 5.000 RUDDER = .000
SPDBRK = 25.000 GRDPLN = .000
LNGRPS = 1.000 LNDGDR = 100.000

SECTION (1)NS GR TOP WAL CPS DEPENDENT VARIABLE CP

MACH (1) = .230 ALPHA (1) = .050

X/L	.050	.250	.500	.750	.950
X/LW					
.050	-.0425	-.0620	-.1018	-.1098	.0328
.500	-.0480	-.0839	-.1158	-.0956	.0459
.950	-.0389	-.0856	-.1141	-.0675	.0875

MACH (1) = .230 ALPHA (2) = 5.250

X/L	.050	.250	.500	.750	.950
X/LW					
.050	.0955	.0471	.0801	.0417	.2056
.500	.0458	.0362	.0719	.0529	.1839
.950	.1037	.0579	.0537	.0916	.2043

MACH (1) = .230 ALPHA (3) = 10.520

X/L	.050	.250	.500	.750	.950
X/LW					
.050	.2335	.1950	.2234	.2002	.3348
.500	.1804	.1831	.2110	.1957	.3130
.950	.2409	.1977	.2105	.2330	.3327

MACH (1) = .230 ALPHA (4) = 15.790

X/L	.050	.250	.500	.750	.950
X/LW					
.050	.3646	.3436	.3672	.3562	.4759
.500	.3261	.3286	.3504	.3580	.4540
.950	.3629	.3307	.3602	.3918	.4668

MACH (1) = .230 ALPHA (5) = 18.960

X/L	.050	.250	.500	.750	.950
X/LW					
.050	.4403	.4308	.4428	.4380	.5449
.500	.4151	.4143	.4313	.4383	.5244
.950	.4416	.4156	.4419	.4670	.5369

NAAL 737 OA143 ORB/B66-NOSE GEAR TOP WALL CPS (RFCM33) (14 MAY 75)

REFERENCE DATA

SREF =	2690.0000 SQ.FT.	XMRP =	1076.7000 IN.XO		
LREF =	474.8000 IN.	YMRP =	.0000 IN.YO		
BREF =	936.6800 IN.	ZMRP =	375.0000 IN.ZO		
SCALE =	.0405				

PARAMETRIC DATA

BETA =	4.000	BDFLAP =	-11.700
ELEVON =	5.000	RUDDER =	.000
SPDBRK =	25.000	GRDPLN =	.000
LNGRPS =	1.000	LNDGDR =	100.000

SECTION (1)NS GR TOP WAL CPS DEPENDENT VARIABLE CP

MACH (1) = .230 ALPHA (1) = .010

X/L	.050	.250	.500	.750	.950
X/LW					
.050	-.0240	-.0711	-.1090	-.0732	.0814
.500	-.0466	-.0678	-.1155	-.0904	.0995
.950	-.0369	-.0466	-.1135	-.0950	.0308

MACH (1) = .230 ALPHA (2) = 5.230

X/L	.050	.250	.500	.750	.950
X/LW					
.050	.1086	.0715	.0427	.0719	.1811
.500	.0913	.0696	.0380	.0580	.1856
.950	.1012	.0855	.0400	.0467	.1787

MACH (1) = .230 ALPHA (3) = 10.470

X/L	.050	.250	.500	.750	.950
X/LW					
.050	.2518	.2203	.1954	.2232	.3070
.500	.2306	.2184	.1915	.2077	.3051
.950	.2412	.2287	.1966	.1978	.3174

MACH (1) = .230 ALPHA (4) = 15.750

X/L	.050	.250	.500	.750	.950
X/LW					
.050	.3945	.3687	.3512	.3738	.4323
.500	.3728	.3570	.3567	.3642	.4379
.950	.3793	.3706	.3755	.3642	.4547

MACH (1) = .230 ALPHA (5) = 18.910

X/L	.050	.250	.500	.750	.950
X/LW					
.050	.4767	.4482	.4488	.4669	.5151
.500	.4387	.4328	.4523	.4584	.5258
.950	.4615	.4447	.4669	.4563	.5335

NAAL 737 OA143 ORB/B66-NOSE GEAR TOP WALL CPS (RFCM34) (14 MAY 75)

REFERENCE DATA

SREF =	2690.0000 SQ.FT.	XMRP =	1076.7000 IN.XO		
LREF =	474.8000 IN.	YMRP =	.0000 IN.YO		
BREF =	936.6800 IN.	ZMRP =	375.0000 IN.ZO		
SCALE =	.0403				

PARAMETRIC DATA

BETA =	8.000	BDFLAP =	-11.700
ELEVON =	5.000	RUDDER =	.000
SPDBRK =	25.000	GRDPLN =	.000
LNGRPS =	1.000	LNDGDR =	100.000

SECTION (1)NS GR TOP WAL CPS DEPENDENT VARIABLE CP

MACH (1) = .230 ALPHA (1) = -4.170

X/L	.050	.250	.500	.750	.950
X/LW					
.050	-.1298	-.1945	-.2203	-.1766	.0022
.500	-.1537	-.1882	-.2274	-.2021	-.0202
.950	-.1449	-.1605	-.2186	-.2120	-.0789

MACH (1) = .230 ALPHA (2) = -2.060

X/L	.050	.250	.500	.750	.950
X/LW					
.050	-.0780	-.1393	-.1659	-.1234	.0460
.500	-.1008	-.1360	-.1717	-.1503	.0237
.950	-.0918	-.1124	-.1646	-.1605	-.0200

MACH (1) = .230 ALPHA (3) = .020

X/L	.050	.250	.500	.750	.950
X/LW					
.050	-.0269	-.0822	-.1044	-.0674	.0890
.500	-.0474	-.0825	-.1138	-.0931	.0611
.950	-.0373	-.0625	-.1088	-.1079	.0448

MACH (1) = .230 ALPHA (4) = 2.090

X/L	.050	.250	.500	.750	.950
X/LW					
.050	.0279	-.0233	-.0452	-.0074	.1332
.500	.0018	-.0335	-.0478	-.0329	.1039
.950	.0153	-.0181	-.0285	-.0436	.1026

MACH (1) = .230 ALPHA (5) = 4.170

X/L	.050	.250	.500	.750	.950
X/LW					
.050	.0897	.0268	.0518	.0671	.1841
.500	-.0047	.0035	.0501	.0322	.1643
.950	.0762	.0235	.0556	.0223	.1769

MACH (1) = .230 ALPHA (6) = 6.270

X/L	.050	.250	.500	.750	.950
X/LW					
.050	.1414	.0825	.1088	.1257	.2345
.500	.0484	.0646	.1150	.0888	.2[illegible]4
.950	.1350	.0797	.1194	.0926	.2294

MACH (1) = .230 ALPHA (7) = 8.370

X/L	.050	.250	.500	.750	.950
X/LW					
.050	.1969	.1380	.1666	.1859	.2878
.500	.1119	.1286	.1662	.1489	.2641
.950	.1888	.1407	.1741	.1594	.2713

NAAL 737 OA143 ORB/B66-NOSE GEAR TOP WALL CPS (RFCM34)

SECTION (1)NS GR TOP WAL CPS DEPENDENT VARIABLE CP

MACH (1) = .230 ALPHA (8) = 10.470

X/L	.050	.250	.500	.750	.950
X/LW					
.050	.2467	.1972	.2273	.2444	.3403
.500	.1735	.1910	.2187	.2099	.3200
.950	.2443	.2005	.2328	.2193	.3296

MACH (1) = .230 ALPHA (9) = 12.570

X/L	.050	.250	.500	.750	.950
X/LW					
.050	.2972	.2505	.2854	.3070	.3942
.500	.2375	.2461	.2733	.2732	.3756
.950	.2972	.2608	.2945	.2801	.3873

MACH (1) = .230 ALPHA (10) = 14.650

X/L	.050	.250	.500	.750	.950
X/LW					
.050	.3490	.3065	.3425	.3657	.4427
.500	.3002	.3027	.3303	.3327	.4270
.950	.3512	.3170	.3515	.3383	.4353

MACH (1) = .230 ALPHA (11) = 16.770

X/L	.050	.250	.500	.750	.950
X/LW					
.050	.4024	.3673	.3984	.4233	.4973
.500	.3641	.3638	.3864	.3923	.4762
.950	.4051	.3777	.4087	.3947	.4845

MACH (1) = .230 ALPHA (12) = 18.880

X/L	.050	.250	.500	.750	.950
X/LW					
.050	.4470	.4273	.4543	.4761	.5413
.500	.4210	.4194	.4446	.4500	.5232
.950	.4535	.4357	.4579	.4511	.5314

NAAL 737 OA143 ORB/B65-NOSE GEAR TOP WALL CPS (RFCM35) (14 MAY 75)

REFERENCE DATA

SREF = 2690.0000 SQ.FT. XMRP = 1076.7000 IN.XO
LREF = 474.8000 IN. YMRP = .0000 IN.YO
BREF = 936.6800 IN. ZMRP = 375.0000 IN.ZO
SCALE = .0405

PARAMETRIC DATA

BETA = .000 BDFLAP = -11.700
ELEVON = 5.000 RUDDER = .000
SPDBRK = 25.000 GRDPLN = .000
LNGRPS = 1.000 LNDGDR = 100.000

SECTION (1)NS GR TOP WAL CPS DEPENDENT VARIABLE CP

MACH (1) = .230 ALPHA (1) = .030

X/L	.050	.250	.500	.750	.950
X/LW					
.050	-.0305	-.0645	-.1013	-.0731	.0400
.500	-.0406	-.0571	-.1136	-.0874	.0961
.950	-.0349	-.0510	-.1114	-.0831	.0352

MACH (1) = .230 ALPHA (2) = 5.230

X/L	.050	.250	.500	.750	.950
X/LW					
.050	.1099	.0784	.0407	.0680	.1733
.500	.0967	.0792	.0314	.0575	.2205
.950	.1058	.0935	.0303	.0567	.1640

MACH (1) = .230 ALPHA (3) = 10.470

X/L	.050	.250	.500	.750	.950
X/LW					
.050	.2463	.2218	.1921	.2175	.3009
.500	.2428	.2191	.1878	.2146	.3137
.950	.2428	.2343	.1895	.2122	.2950

MACH (1) = .230 ALPHA (4) = 15.750

X/L	.050	.250	.500	.750	.950
X/LW					
.050	.3885	.3697	.3527	.3690	.4400
.500	.3844	.3662	.3496	.3701	.4251
.950	.3841	.3768	.3523	.3666	.4294

MACH (1) = .230 ALPHA (5) = 18.910

X/L	.050	.250	.500	.750	.950
X/LW					
.050	.4705	.4612	.4455	.4525	.5125
.500	.4670	.4536	.4422	.4560	.5026
.950	.4645	.4596	.4430	.4546	.5060

NAAL 737 OA143 ORB/B65-NOSE GEAR TOP WALL CPS (RFCM36) (14 MAY 75)

REFERENCE DATA

SREF = 2690.0000 SQ.FT. XMRP = 1076.7000 IN.XO
LREF = 474.8000 IN. YMRP = .0000 IN.YO
BREF = 936.6800 IN. ZMRP = 375.0000 IN.ZO
SCALE = .0405

PARAMETRIC DATA

BETA = -4.000 BDFLAP = -11.700
ELEVON = 5.000 RUDDER = .000
SPDBRK = 25.000 GRDPLN = .000
LNGRPS = 1.000 LNDGDR = 100.000

SECTION (1)NS GR TOP WAL CPS DEPENDENT VARIABLE CP

MACH (1) = .230 ALPHA (1) = .000

X/L	.050	.250	.500	.750	.950
X/LW					
.050	-.0423	-.0571	-.1035	-.0923	.0191
.500	-.0566	-.0769	-.1129	-.0874	.0591
.950	-.0365	-.0797	-.1159	-.0764	.0599

MACH (1) = .230 ALPHA (2) = 5.260

X/L	.050	.250	.500	.750	.950
X/LW					
.050	.0947	.0843	.0436	.0422	.1755
.500	.0868	.0689	.0373	.0549	.1753
.950	.1038	.0645	.0318	.0683	.1766

MACH (1) = .230 ALPHA (3) = 10.490

X/L	.050	.250	.500	.750	.950
X/LW					
.050	.2356	.2264	.1951	.1924	.3218
.500	.2296	.2131	.1873	.2055	.3042
.950	.2435	.2147	.1851	.2191	.3023

MACH (1) = .230 ALPHA (4) = 15.770

X/L	.050	.250	.500	.750	.950
X/LW					
.050	.3706	.3657	.3680	.3510	.4627
.500	.3636	.3503	.3519	.3592	.4465
.950	.3863	.3601	.3408	.3704	.4366

MACH (1) = .230 ALPHA (5) = 18.920

X/L	.050	.250	.500	.750	.950
X/LW					
.050	.4561	.4402	.4589	.4472	.5445
.500	.4315	.4256	.4483	.4488	.5344
.950	.4683	.4434	.4413	.4592	.5246

NAAL 737 OA143 ORB/B65-NOSE GEAR TOP WALL CPS (RFCM37) (14 MAY 75)

REFERENCE DATA

SREF = 2690.0000 SQ.FT. XMRP = 1076.7000 IN.XO
LREF = 474.8000 IN. YMRP = .0000 IN.YO
BREF = 936.6800 IN. ZMRP = 375.0000 IN.ZO
SCALE = .0405

PARAMETRIC DATA

BETA = -8.000 BDFLAP = -11.700
ELEVON = 5.000 RUDDER = .000
SPDBRK = 25.000 GRDPLN = .000
LNGRPS = 1.000 LNDGDR = 100.000

SECTION (1)NS GR TOP WAL CPS DEPENDENT VARIABLE CP

MACH (1) = .230 ALPHA (1) = .030

X/L	.050	.250	.500	.750	.950
X/LW					
.050	-.0436	-.0601	-.1034	-.1117	.0309
.500	-.0442	-.0864	-.1150	-.0970	.0459
.950	-.0423	-.0875	-.1177	-.0651	.0859

MACH (1) = .230 ALPHA (2) = 5.250

X/L	.050	.250	.500	.750	.950
X/LW					
.050	.0900	.0515	.0763	.0441	.1943
.500	.0392	.0356	.0735	.0553	.1844
.950	.1050	.0587	.0545	.0921	.2055

MACH (1) = .230 ALPHA (3) = 10.510

X/L	.050	.250	.500	.750	.950
X/LW					
.050	.2352	.1971	.2224	.2063	.3328
.500	.1802	.1875	.2110	.2028	.3170
.950	.2414	.1963	.2107	.2320	.3315

MACH (1) = .230 ALPHA (4) = 15.790

X/L	.050	.250	.500	.750	.950
X/LW					
.050	.3663	.3438	.3673	.3558	.4726
.500	.3294	.3275	.3481	.3582	.4526
.950	.3655	.3305	.3574	.3891	.4644

MACH (1) = .230 ALPHA (5) = 18.950

X/L	.050	.250	.500	.750	.950
X/LW					
.050	.4437	.4310	.4452	.4398	.5428
.500	.4190	.4139	.4348	.4390	.5238
.950	.4421	.4166	.4451	.4708	.5385

NAAL 737 OA143 ORB/B65-NOSE GEAR TOP WALL CPS (RFCM38) (14 MAY 75)

REFERENCE DATA

SREF = 2690.0000 SQ.FT. XMRP = 1076.7000 IN.XO
LREF = 474.8000 IN. YMRP = .0000 IN.YO
BREF = 936.6800 IN. ZMRP = 375.0000 IN.ZO
SCALE = .0405

PARAMETRIC DATA

BETA = 4.000 BDFLAP = -11.700
ELEVON = 5.000 RUDDER = .000
SPDBRK = 25.000 GRDPLN = .000
LNGRPS = 1.000 LNDGDR = 100.000

SECTION (1)NS GR TOP WAL CPS DEPENDENT VARIABLE CP

MACH (1) = .230 ALPHA (1) = .010

X/L	.050	.250	.500	.750	.950
X/LW					
.050	-.0217	-.0689	-.1077	-.0726	.0816
.500	-.0450	-.0661	-.1144	-.0865	.0974
.950	-.0329	-.0453	-.1114	-.0921	.0320

MACH (1) = .230 ALPHA (2) = 5.240

X/L	.050	.250	.500	.750	.950
X/LW					
.050	.1092	.0701	.0415	.0738	.1822
.500	.0929	.0695	.0368	.0587	.1886
.950	.1015	.0866	.0365	.0466	.1825

MACH (1) = .230 ALPHA (3) = 10.090

X/L	.050	.250	.500	.750	.950
X/LW					
.050	.4807	.4505	.4479	.4661	.5182
.500	.4437	.4353	.4546	.4575	.5287
.950	.4655	.4511	.4720	.4546	.5361

MACH (1) = .230 ALPHA (4) = 10.460

X/L	.050	.250	.500	.750	.950
X/LW					
.050	.2511	.2193	.1950	.2276	.3073
.500	.2329	.2158	.1926	.2081	.3051
.950	.2419	.2285	.1975	.1977	.3171

MACH (1) = .230 ALPHA (5) = 15.730

X/L	.050	.250	.500	.750	.950
X/LW					
.050	.3919	.3688	.3523	.3777	.4332
.500	.3715	.3604	.3549	.3654	.4359
.950	.3805	.3734	.3718	.3641	.4549

NAAL 737 OA143 ORB/B65-NOSE GEAR TOP WALL CPS (RFCM39) (14 MAY 75)

REFERENCE DATA

SREF = 2690.0000 SQ.FT. XMRP = 1076.7000 IN.XO
LREF = 474.8000 IN. YMRP = .0000 IN.YO
BREF = 936.6800 IN. ZMRP = 375.0000 IN.ZO
SCALE = .0405

PARAMETRIC DATA

BETA = 8.000 BDFLAP = -11.700
ELEVON = 5.000 RUDDER = .000
SPDBRK = 25.000 GRDPLN = .000
LNGRPS = 1.000 LNDGDR = 100.000

SECTION (11)NS GR TOP WAL CPS DEPENDENT VARIABLE CP

MACH (1) = .230 ALPHA (1) = .020

X/L	.050	.250	.500	.750	.950
X/LW					
.050	-.0255	-.0843	-.1060	-.0689	.0930
.500	-.0453	-.0827	-.1124	-.0931	.0610
.950	-.0376	-.0618	-.1080	-.1044	.0401

MACH (1) = .230 ALPHA (2) = 5.250

X/L	.050	.250	.500	.750	.950
X/LW					
.050	.1172	.0525	.0807	.1008	.2097
.500	.0095	.0364	.0835	.0592	.1907
.950	.1076	.0512	.0816	.0635	.2041

MACH (1) = .230 ALPHA (3) = 10.460

X/L	.050	.250	.500	.750	.950
X/LW					
.050	.2459	.1946	.2260	.2436	.3377
.500	.1737	.1867	.2207	.2113	.3201
.950	.2427	.2006	.2294	.2207	.3300

MACH (1) = .230 ALPHA (4) = 15.740

X/L	.050	.250	.500	.750	.950
X/LW					
.050	.3747	.3402	.3696	.3976	.4704
.500	.3350	.3337	.3595	.3651	.4542
.950	.3771	.3494	.3790	.3677	.4592

MACH (1) = .230 ALPHA (5) = 18.890

X/L	.050	.250	.500	.750	.950
X/LW					
.050	.4531	.4238	.4530	.4760	.5411
.500	.4254	.4205	.4455	.4496	.5245
.950	.4564	.4363	.4577	.4480	.5336

NAAL 737 OA143 ORB/B67-NOSE GEAR TOP WALL CPS (RFCM56) (14 MAY 75)

REFERENCE DATA

SREF =	2690.0000 SQ.FT.	XMRP =	1076.7000 IN.XO
LREF =	474.8000 IN.	YMRP =	.0000 IN.YO
BREF =	936.6800 IN.	ZMRP =	375.0000 IN.ZO
SCALE =	.0405		

PARAMETRIC DATA

BETA =	.000	BDFLAP =	-11.700
ELEVON =	5.000	RUDDER =	.000
SPDBRK =	25.000	GRDPLN =	.000
LNGRPS =	1.000	LNDGDR =	100.000

SECTION (1)NS GR TOP WAL CPS DEPENDENT VARIABLE CP

MACH (1) = .230 ALPHA (1) = -4.160

X/L	.050	.250	.500	.750	.950
X/LW					
.050	-.1356	-.1636	-.2056	-.1844	-.0583
.500	-.1455	-.1559	-.2178	-.1959	.0065
.950	-.1373	-.1564	-.2184	-.1893	-.0540

MACH (1) = .230 ALPHA (2) = -2.080

X/L	.050	.250	.500	.750	.950
X/LW					
.050	-.0836	-.1119	-.1545	-.1289	-.0093
.500	-.0930	-.1070	-.1631	-.1427	.0527
.950	-.0850	-.1067	-.1645	-.1381	-.0125

MACH (1) = .230 ALPHA (3) = .020

X/L	.050	.250	.500	.750	.950
X/LW					
.050	-.0267	-.0588	-.0996	-.0760	.0455
.500	-.0382	-.0533	-.1103	-.0873	.0993
.950	-.0313	-.0489	-.1097	-.0811	.0369

MACH (1) = .230 ALPHA (4) = 2.110

X/L	.050	.250	.500	.750	.950
X/LW					
.050	.0312	-.0030	-.0417	-.0194	.0958
.500	.0175	.0027	-.0546	-.0280	.1481
.950	.0265	.0076	-.0496	-.0245	.0893

MACH (1) = .230 ALPHA (5) = 4.200

X/L	.050	.250	.500	.750	.950
X/LW					
.050	.0846	.0555	.0153	.0383	.1482
.500	.0670	.0550	.0032	.0335	.1937
.950	.0802	.0665	.0048	.0346	.1394

MACH (1) = .230 ALPHA (6) = 6.290

X/L	.050	.250	.500	.750	.950
X/LW					
.050	.1351	.1104	.0708	.0968	.1994
.500	.1250	.1110	.0644	.0917	.2409
.950	.1365	.1263	.0649	.0896	.1861

MACH (1) = .230 ALPHA (7) = 8.400

X/L	.050	.250	.500	.750	.950
X/LW					
.050	.1934	.1632	.1311	.1565	.2466
.500	.1858	.1648	.1230	.1514	.2746
.950	.1864	.1788	.1257	.1495	.2349

NAAL 737 OA143 ORB/B67-NOSE GEAR TOP WALL CPS (RFCM56)

SECTION (1)NS GR TOP WAL CPS DEPENDENT VARIABLE CP

MACH (1) = .230 ALPHA (8) = 10.490

X/L	.050	.250	.500	.750	.950
X/LW					
.050	.2461	.2243	.1962	.2170	.3012
.500	.2423	.2192	.1849	.2125	.3138
.950	.2434	.2360	.1876	.2125	.2908

MACH (1) = .230 ALPHA (9) = 12.590

X/L	.050	.250	.500	.750	.950
X/LW					
.050	.3044	.2780	.2621	.2784	.3569
.500	.2998	.2778	.2549	.2786	.3531
.950	.3014	.2922	.2560	.2746	.3451

MACH (1) = .230 ALPHA (10) = 14.700

X/L	.050	.250	.500	.750	.950
X/LW					
.050	.3586	.3420	.3257	.3394	.4118
.500	.3575	.3368	.3181	.3404	.4011
.950	.3556	.3483	.3192	.3364	.4009

MACH (1) = .230 ALPHA (11) = 16.800

X/L	.050	.250	.500	.750	.950
X/LW					
.050	.4148	.3965	.3839	.4023	.4656
.500	.4142	.3925	.3827	.4023	.4536
.950	.4131	.4014	.3827	.4004	.4541

MACH (1) = .230 ALPHA (12) = 18.910

X/L	.050	.250	.500	.750	.950
X/LW					
.050	.4668	.4565	.4428	.4546	.5145
.500	.4660	.4490	.4443	.4588	.5001
.950	.4641	.4527	.4430	.4551	.5046

NAAL 737 OA143 ORB/867-NOSE GEAR TOP WALL CPS (RFCM60) (14 MAY 75)

REFERENCE DATA

SREF =	2690.0000 SQ.FT.	XMRP =	1076.7000 IN.XO
LREF =	474.8000 IN.	YMRP =	.0000 IN.YO
BREF =	936.6800 IN.	ZMRP =	375.0000 IN.ZO
SCALE =	.0405		

PARAMETRIC DATA

BETA =	-8.000	BDFLAP =	-11.700
ELEVON =	5.000	RUDDER =	.000
SPDBRK =	25.000	GRDPLN =	.000
LNGRPS =	1.000	LNDGDR =	100.000

SECTION (1)NS GR TOP WAL CPS DEPENDENT VARIABLE CP

MACH (1) = .230 ALPHA (1) = -4.130

X/L	.050	.250	.500	.750	.950
X/LW					
.050	-.1299	-.1925	-.2135	-.1730	.0019
.500	-.1504	-.1837	-.2235	-.1985	-.0227
.950	-.1411	-.1562	-.2130	-.2111	-.0836

MACH (1) = .230 ALPHA (2) = -2.050

X/L	.050	.250	.500	.750	.950
X/LW					
.050	-.0782	-.1411	-.1625	-.1239	.0494
.500	-.0950	-.1353	-.1702	-.1510	.0242
.950	-.0933	-.1095	-.1608	-.1617	-.0288

MACH (1) = .230 ALPHA (3) = .020

X/L	.050	.250	.500	.750	.950
X/LW					
.050	-.0280	-.0825	-.1039	-.0663	.0914
.500	-.0448	-.0825	-.1141	-.0940	.0638
.950	-.0366	-.0586	-.1050	-.1071	.0382

MACH (1) = .230 ALPHA (4) = 2.120

X/L	.050	.250	.500	.750	.950
X/LW					
.050	.0320	-.0225	-.0447	-.0071	.1324
.500	-.0052	-.0285	-.0480	-.0345	.1018
.950	.0123	-.0101	-.0340	-.0474	.1026

MACH (1) = .230 ALPHA (5) = 4.180

X/L	.050	.250	.500	.750	.950
X/LW					
.050	.0893	.0321	.0401	.0627	.1804
.500	.0117	.0282	.0000	.0318	.1630
.950	.0753	.0282	.0373	.0283	.1756

MACH (1) = .230 ALPHA (6) = 6.290

X/L	.050	.250	.500	.750	.950
X/LW					
.050	.1477	.0866	.1093	.1281	.2323
.500	.0514	.0850	.0000	.0910	.2117
.950	.1309	.0858	.1136	.0902	.2313

MACH (1) = .230 ALPHA (7) = 8.380

X/L	.050	.250	.500	.750	.950
X/LW					
.050	.1966	.1446	.1681	.1815	.2818
.500	.1139	.1410	.0000	.1517	.2612
.950	.1882	.1421	.1644	.1587	.2783

NAAL 737 OA143 ORB/B67-NOSE GEAR TOP WALL CPS (RFCM60)

SECTION (1)NS GR TOP WAL CPS DEPENDENT VARIABLE CP

MACH (1) = .230 ALPHA (8) = 9.020

X/L	.050	.250	.500	.750	.950
X/LW					
.050	.3970	.3697	.4019	.4250	.4953
.500	.3691	.3669	.3896	.3950	.4795
.950	.4013	.3825	.4071	.3952	.4870

MACH (1) = .230 ALPHA (9) = 10.480

X/L	.050	.250	.500	.750	.950
X/LW					
.050	.2478	.1961	.2262	.2455	.3351
.500	.1795	.1898	.2192	.2139	.3174
.950	.2432	.2007	.2326	.2179	.3322

MACH (1) = .230 ALPHA (10) = 12.590

X/L	.050	.250	.500	.750	.950
X/LW					
.050	.2940	.2535	.2371	.3102	.3912
.500	.2412	.2467	.2750	.2759	.3717
.950	.2965	.2608	.2962	.2799	.3877

MACH (1) = .230 ALPHA (11) = 14.680

X/L	.050	.250	.500	.750	.950
X/LW					
.050	.3476	.3130	.3454	.3682	.4407
.500	.3070	.3065	.3299	.3374	.4231
.950	.3506	.3207	.3544	.3369	.4383

MACH (1) = .230 ALPHA (12) = 18.890

X/L	.050	.250	.500	.750	.950
X/LW					
.050	.4503	.4277	.4576	.4779	.5414
.500	.4271	.4247	.4459	.4517	.5256
.950	.4527	.4383	.4604	.4543	.5317

NAAL 737 OA143 ORB/B66-NOSE GEAR RT SDWALL CPS (RFCN01) (14 MAY 75)

REFERENCE DATA

SREF =	2690.0000 SQ.FT.	XMRP =	1076.7000 IN.XO		
LREF =	474.8000 IN.	YMRP =	.0000 IN.YO		
BREF =	936.6800 IN.	ZMRP =	375.0000 IN.ZO		
SCALE =	.0405				

PARAMETRIC DATA

BETA =	.000	BDFLAP =	-11.700
ELEVON =	5.000	RUDDER =	.000
SPDBRK =	25.000	GRDPLN =	1.000
LNGRPS =	1.000	LNDGDR =	100.000

SECTION (1)NS GR RT SWAL CPS DEPENDENT VARIABLE CP

MACH (1) = .200 ALPHA (1) = .010

X/L	.050	.250	.500	.750	.950
X/LD					
.050	-.0792	-.0142	-.0547	-.0268	.0940
.500	-.0013	-.0500	-.0767	-.0787	-.0081
.950	.0307	.1742	-.0501	.0120	.0585

MACH (1) = .200 ALPHA (2) = 5.380

X/L	.050	.250	.500	.750	.950
X/LD					
.050	.0235	.1139	.0794	.1084	.2062
.500	.1357	.0870	.0665	.0628	.1325
.950	.1707	.3213	.0929	.1656	.1692

MACH (1) = .200 ALPHA (3) = 10.710

X/L	.050	.250	.500	.750	.950
X/LD					
.050	.1397	.2516	.2276	.2421	.3231
.500	.2731	.2241	.2293	.2174	.2777
.950	.3059	.4182	.2329	.3379	.2787

MACH (1) = .200 ALPHA (4) = 16.140

X/L	.050	.250	.500	.750	.950
X/LD					
.050	.2509	.3945	.3783	.3894	.4371
.500	.4014	.3812	.3803	.3783	.4247
.950	.4264	.5487	.3691	.5312	.3796

MACH (1) = .200 ALPHA (5) = 19.380

X/L	.050	.250	.500	.750	.950
X/LD					
.050	.3133	.4725	.4641	.4680	.5099
.500	.4821	.4633	.4606	.4625	.5060
.950	.5062	.6198	.4830	.6235	.4265

NAAL 737 OA143 ORB/866-NOSE GEAR RT SDWALL CPS (RFCN02) (14 MAY 75)

REFERENCE DATA

SREF = 2690.0000 SQ.FT. XMRP = 1076.7000 IN.XO
LREF = 474.8000 IN. YMRP = .0000 IN.YO
BREF = 936.6800 IN. ZMRP = 375.0000 IN.ZO
SCALE = .0405

PARAMETRIC DATA

BETA = -4.000 BDFLAP = -11.700
ELEVON = 5.000 RUDDER = .000
SPDBRK = 25.000 GRDPLN = 1.000
LNGRPS = 1.000 LNDGDR = 100.000

SECTION (1)NS GR RT SWAL CPS DEPENDENT VARIABLE CP

MACH (1) = .200 ALPHA (1) = .010

X/L	.050	.250	.500	.750	.950
X/LD					
.050	-.0750	-.0101	-.0569	-.0579	.0663
.500	-.0050	-.0373	-.0616	-.0735	.0130
.950	.0282	.2586	-.0367	.0928	.1136

MACH (1) = .200 ALPHA (2) = 5.370

X/L	.050	.250	.500	.750	.950
X/LD					
.050	.0255	.1172	.0810	.0734	.1903
.500	.1256	.0917	.0780	.0658	.1553
.950	.1562	.3514	.1015	.2715	.1718

MACH (1) = .200 ALPHA (3) = 10.760

X/L	.050	.250	.500	.750	.950
X/LD					
.050	.1331	.2505	.2268	.2209	.3234
.500	.2656	.2290	.2203	.2176	.3023
.950	.2928	.4695	.2476	.4460	.2753

MACH (1) = .200 ALPHA (4) = 16.150

X/L	.050	.250	.500	.750	.950
X/LD					
.050	.2430	.3827	.3899	.3710	.4572
.500	.4033	.3682	.3769	.3691	.4475
.950	.4364	.5807	.4049	.5920	.3958

MACH (1) = .200 ALPHA (5) = 19.360

X/L	.050	.250	.500	.750	.950
X/LD					
.050	.3094	.4549	.4760	.4595	.5387
.500	.4886	.4549	.4709	.4591	.5378
.950	.5227	.6496	.4952	.6606	.4582

NAAL 737 OA143 ORB/B66-NOSE GEAR RT SDWALL CPS (RFCN03) (14 MAY 75)

REFERENCE DATA

SREF = 2690.0000 SQ.FT. XMRP = 1076.7000 IN.XO
LREF = 474.8000 IN. YMRP = .0000 IN.YO
BREF = 936.6800 IN. ZMRP = 375.0000 IN.ZO
SCALE = .0405

PARAMETRIC DATA

BETA = -8.000 BDFLAP = -11.700
ELEVON = 5.000 RUDDER = .000
SPDBRK = 25.000 GRDPLN = 1.000
LNGRPS = 1.000 LNDGDR = 100.000

SECTION (1)NS GR RT SWAL CPS DEPENDENT VARIABLE CP

MACH (1) = .200 ALPHA (1) = .030

X/L	.050	.250	.500	.750	.950
X/LD					
.050	-.0804	-.0247	-.0609	-.0811	.0577
.500	-.0067	-.0481	-.0685	-.0835	.0315
.950	.0393	.2990	-.0287	.1960	.0643

MACH (1) = .200 ALPHA (2) = 5.380

X/L	.050	.250	.500	.750	.950
X/LD					
.050	.0207	.0778	.1080	.0647	.2119
.500	.1460	.0751	.0822	.0789	.1970
.950	.1735	.4045	.1376	.3735	.1406

MACH (1) = .200 ALPHA (3) = 10.760

X/L	.050	.250	.500	.750	.950
X/LD					
.050	.1296	.2198	.2473	.2152	.3393
.500	.2689	.2322	.2056	.2221	.3298
.950	.2903	.5222	.2936	.4907	.2411

MACH (1) = .200 ALPHA (4) = 16.170

X/L	.050	.250	.500	.750	.950
X/LD					
.050	.2340	.3699	.3826	.3642	.4692
.500	.3795	.3645	.3574	.3708	.4705
.950	.4223	.6099	.4371	.5978	.3534

MACH (1) = .200 ALPHA (5) = 19.400

X/L	.050	.250	.500	.750	.950
X/LD					
.050	.2959	.4531	.4572	.4490	.5321
.500	.4578	.4448	.4422	.4539	.5468
.950	.5052	.6525	.5158	.6560	.4109

NAAL 737 OA143 ORB/B66-NOSE GEAR RT SDWALL CPS (RFCN04) (14 MAY 75)

REFERENCE DATA

SREF =	2690.0000 SQ.FT.	XMRP =	1076.7000 IN.XO		
LREF =	474.8000 IN.	YMRP =	.0000 IN.YO		
BREF =	936.6800 IN.	ZMRP =	375.0000 IN.ZO		
SCALE =	.0405				

PARAMETRIC DATA

BETA =	4.000	BDFLAP =	-11.700
ELEVON =	5.000	RUDDER =	.000
SPDBRK =	25.000	GRDPLN =	1.000
LNGRPS =	1.000	LNDGDR =	100.000

SECTION (1)NS GR RT SWAL CPS DEPENDENT VARIABLE CP

MACH (1) = .200 ALPHA (1) = .000

X/L	.050	.250	.500	.750	.950
X/LD					
.050	-.0793	-.0240	-.0555	-.0197	.1101
.500	.0036	-.0640	-.0731	-.0674	-.0121
.950	.0420	-.0358	-.0615	-.0137	.0113

MACH (1) = .200 ALPHA (2) = 5.340

X/L	.050	.250	.500	.750	.950
X/LD					
.050	.0181	.1066	.0831	.1118	.2123
.500	.1258	.0743	.0665	.0741	.1270
.950	.1665	.1439	.0751	.1280	.1168

MACH (1) = .200 ALPHA (3) = 10.730

X/L	.050	.250	.500	.750	.950
X/LD					
.050	.1363	.2481	.2262	.2591	.3365
.500	.2589	.2207	.2134	.2239	.2733
.950	.3034	.3734	.2269	.2940	.2427

MACH (1) = .200 ALPHA (4) = 16.140

X/L	.050	.250	.500	.750	.950
X/LD					
.050	.2506	.3852	.3744	.4028	.4503
.500	.3965	.3725	.3705	.3793	.4185
.950	.4301	.5170	.3907	.4640	.3567

MACH (1) = .200 ALPHA (5) = 19.370

X/L	.050	.250	.500	.750	.950
X/LD					
.050	.3141	.4648	.4611	.4813	.5278
.500	.4701	.4569	.4550	.4624	.5076
.950	.5022	.6014	.4680	.5515	.4082

NAAL 737 OA143 ORB/B66-NOSE GEAR RT SDWALL CPS (RFCN05) (14 MAY 75)

REFERENCE DATA

SREF = 2690.0000 SQ.FT. XMRP = 1076.7000 IN.XO
LREF = 474.8000 IN. YMRP = .0000 IN.YO
BREF = 936.6800 IN. ZMRP = 375.0000 IN.ZO
SCALE = .0405

PARAMETRIC DATA

BETA = 8.000 BDFLAP = -11.700
ELEVON = 5.000 RUDDER = .000
SPDBRK = 25.000 GRDPLN = 1.000
LNGRPS = 1.000 LNDGDR = 100.000

SECTION (1)NS GR RT SWAL CPS DEPENDENT VARIABLE CP

MACH (1) = .200 ALPHA (1) = .030

X/L	.050	.250	.500	.750	.950
X/LD					
.050	-.0838	-.0405	-.0617	-.0236	.1228
.500	-.0100	-.0672	-.0776	-.0723	.0390
.950	.0372	-.0781	-.0825	-.0498	-.0345

MACH (1) = .200 ALPHA (2) = 5.360

X/L	.050	.250	.500	.750	.950
X/LD					
.050	.0218	.0931	.1009	.1279	.2357
.500	.1132	.0813	.0741	.0787	.1934
.950	.1321	.0641	.0665	.1018	.0774

MACH (1) = .200 ALPHA (3) = 10.770

X/L	.050	.250	.500	.750	.950
X/LD					
.050	.1343	.2249	.2520	.2698	.3581
.500	.2356	.2252	.2169	.2340	.3207
.950	.2526	.2099	.2218	.2504	.1926

MACH (1) = .200 ALPHA (4) = 16.160

X/L	.050	.250	.500	.750	.950
X/LD					
.050	.2367	.3609	.3921	.4157	.4818
.500	.3633	.3639	.3594	.3692	.4536
.950	.3782	.3756	.3758	.4042	.3034

MACH (1) = .200 ALPHA (5) = 19.390

X/L	.050	.250	.500	.750	.950
X/LD					
.050	.2964	.4423	.4732	.4899	.5462
.500	.4460	.4479	.4384	.4459	.5149
.950	.4519	.5010	.4612	.5074	.3680

NAAL 737 OA143 ORB/B66-NOSE GEAR RT SDWALL CPS (RFCN06) (14 MAY 75)

REFERENCE DATA

SREF = 2690.0000 SQ.FT. XMRP = 1076.7000 IN.XO
LREF = 474.8000 IN. YMRP = .0000 IN.YO
BREF = 936.6800 IN. ZMRP = 375.0000 IN.ZO
SCALE = .0405

PARAMETRIC DATA

BETA = .000 BDFLAP = -11.700
ELEVON = 10.000 RUDDER = .000
SPDBRK = 25.000 GRDPLN = 1.000
LNGRPS = 1.000 LNDGDR = 100.000

SECTION (1)NS GR RT SWAL CPS DEPENDENT VARIABLE CP

MACH (1) = .200 ALPHA (1) = .110

X/L	.050	.250	.500	.750	.950
X/LD					
.050	-.0856	-.0149	-.0522	-.0248	.0936
.500	.0000	-.0494	-.0739	-.0776	-.0075
.950	.0331	.1784	-.0495	.0197	.0590

MACH (1) = .200 ALPHA (2) = 5.470

X/L	.050	.250	.500	.750	.950
X/LD					
.050	.0202	.1161	.0804	.1119	.2085
.500	.1367	.0871	.0688	.0625	.1338
.950	.1711	.3177	.0913	.1687	.1743

MACH (1) = .200 ALPHA (3) = 10.840

X/L	.050	.250	.500	.750	.950
X/LD					
.050	.1323	.2523	.2235	.2425	.3237
.500	.2746	.2233	.2287	.2153	.2776
.950	.3063	.4157	.2343	.3395	.2821

MACH (1) = .200 ALPHA (4) = 16.230

X/L	.050	.250	.500	.750	.950
X/LD					
.050	.2487	.3939	.3780	.3908	.4405
.500	.4039	.3829	.3823	.3774	.4271
.950	.4298	.5537	.3950	.5315	.3810

MACH (1) = .200 ALPHA (5) = 19.450

X/L	.050	.250	.500	.750	.950
X/LD					
.050	.3095	.4776	.4717	.4783	.5162
.500	.4856	.4679	.4698	.4672	.5129
.950	.5092	.6250	.4868	.6281	.4331

NAAL 737 OA143 ORB/B66-NOSE GEAR RT SDWALL CPS (RFCN07) (14 MAY 75)

REFERENCE DATA

SREF =	2690.0000 SQ.FT.	XMRP =	1076.7000 IN.XO
LREF =	474.8000 IN.	YMRP =	.0000 IN.YO
BREF =	936.6800 IN.	ZMRP =	375.0000 IN.ZO
SCALE =	.0405		

PARAMETRIC DATA

BETA =	-4.000	BDFLAP =	-11.700
ELEVON =	10.000	RUDDER =	.000
SPDBRK =	25.000	GRDPLN =	1.000
LNGRPS =	1.000	LNDGDR =	100.000

SECTION (1)NS GR RT SWAL CPS DEPENDENT VARIABLE CP

MACH (1) = .200 ALPHA (1) = .130

X/L	.050	.250	.500	.750	.950
X/LD					
.050	-.0816	-.0097	-.0538	-.0571	.0635
.500	-.0040	-.0368	-.0588	-.0744	.0153
.950	.0305	.2608	-.0336	.0926	.1124

MACH (1) = .200 ALPHA (2) = 5.470

X/L	.050	.250	.500	.750	.950
X/LD					
.050	.0187	.1160	.0805	.0733	.1890
.500	.1291	.0935	.0769	.0664	.1580
.950	.1576	.3519	.1046	.2698	.1475

MACH (1) = .200 ALPHA (3) = 10.870

X/L	.050	.250	.500	.750	.950
X/LD					
.050	.1283	.2560	.2306	.2180	.3237
.500	.2684	.2315	.2216	.2190	.3088
.950	.2977	.4724	.2514	.4455	.2682

MACH (1) = .200 ALPHA (4) = 16.240

X/L	.050	.250	.500	.750	.950
X/LD					
.050	.2405	.3911	.3927	.3740	.4611
.500	.4071	.3751	.3845	.3691	.4542
.950	.4408	.5884	.4054	.5970	.4038

MACH (1) = .200 ALPHA (5) = 19.450

X/L	.050	.250	.500	.750	.950
X/LD					
.050	.3027	.4609	.4803	.4637	.5418
.500	.4897	.4562	.4650	.4602	.5372
.950	.5231	.6548	.4933	.6621	.4579

NAAL 737 OA143 ORB/B66-NOSE GEAR RT SDWALL CPS (RFCN08) (14 MAY 75)

REFERENCE DATA

SREF =	2690.0000 SQ.FT.	XMRP =	1076.7000 IN.XO
LREF =	474.8000 IN.	YMRP =	.0000 IN.YO
BREF =	936.6800 IN.	ZMRP =	375.0000 IN.ZO
SCALE =	.0405		

PARAMETRIC DATA

BETA =	-8.000	BDFLAP =	-11.700
ELEVON =	10.000	RUDDER =	.000
SPDBRK =	25.000	GRDPLN =	1.000
LNGRPS =	1.000	LNDGDR =	100.000

SECTION (1)NS GR RT SWAL CPS DEPENDENT VARIABLE CP

MACH (1) = .200 ALPHA (1) = .120

X/L	.050	.250	.500	.750	.950
X/LD					
.050	-.0855	-.0240	-.0566	-.0808	.0626
.500	-.0030	-.0471	-.0682	-.0821	.0362
.950	.0420	.3037	-.0254	.1977	.0560

MACH (1) = .200 ALPHA (2) = 5.490

X/L	.050	.250	.500	.750	.950
X/LD					
.050	.0184	.0765	.1086	.0628	.2079
.500	.1510	.0758	.0816	.0786	.1980
.950	.1711	.4115	.1363	.3741	.1337

MACH (1) = .200 ALPHA (3) = 10.870

X/L	.050	.250	.500	.750	.950
X/LD					
.050	.1265	.2214	.2460	.2138	.3412
.500	.2679	.2324	.2095	.2223	.3300
.950	.2906	.5221	.2942	.4846	.2463

MACH (1) = .200 ALPHA (4) = 16.230

X/L	.050	.250	.500	.750	.950
X/LD					
.050	.2324	.3686	.3804	.3630	.4674
.500	.3813	.3646	.3562	.3686	.4727
.950	.4239	.6088	.4370	.5977	.3470

MACH (1) = .200 ALPHA (5) = 19.440

X/L	.050	.250	.500	.750	.950
X/LD					
.050	.2912	.4540	.4600	.4492	.5349
.500	.4606	.4463	.4397	.4524	.5489
.950	.5096	.6567	.5136	.6579	.4112

NAAL 737 OA143 ORB/B66-NOSE GEAR RT SDWALL CPS (RFCN09) (14 MAY 75)

REFERENCE DATA

SREF =	2690.0000 SQ.FT.	XMRP =	1076.7000 IN.XO		
LREF =	474.8000 IN.	YMRP =	.0000 IN.YO		
BREF =	936.6800 IN.	ZMRP =	375.0000 IN.ZO		
SCALE =	.0405				

PARAMETRIC DATA

BETA =	4.000	BDFLAP =	-11.700
ELEVON =	10.000	RUDDER =	.000
SPDBRK =	25.000	GRDPLN =	1.000
LNGRPS =	1.000	LNDGDR =	100.000

SECTION (1)NS GR RT SWAL CPS DEPENDENT VARIABLE CP

MACH (1) = .200 ALPHA (1) = .110

X/L	.050	.250	.500	.750	.950
X/LD					
.050	-.0884	-.0216	-.0535	-.0180	.1105
.500	.0063	-.0627	-.0721	-.0674	-.0134
.950	.0406	-.0355	-.0618	-.0137	.0074

MACH (1) = .200 ALPHA (2) = 5.450

X/L	.050	.250	.500	.750	.950
X/LD					
.050	.0130	.1067	.0819	.1130	.2113
.500	.1269	.0755	.0697	.0724	.1272
.950	.1645	.1417	.0747	.1311	.1176

MACH (1) = .200 ALPHA (3) = 10.830

X/L	.050	.250	.500	.750	.950
X/LD					
.050	.1284	.2468	.2269	.2564	.3332
.500	.2605	.2184	.2151	.2260	.2728
.950	.3005	.3736	.2289	.2974	.2456

MACH (1) = .200 ALPHA (4) = 16.230

X/L	.050	.250	.500	.750	.950
X/LD					
.050	.2463	.3903	.3738	.4039	.4537
.500	.3976	.3763	.3686	.3794	.4223
.950	.4296	.5213	.3915	.4672	.3610

MACH (1) = .200 ALPHA (5) = 19.440

X/L	.050	.250	.500	.750	.950
X/LD					
.050	.3109	.4711	.4676	.4859	.5313
.500	.4741	.4631	.4568	.4627	.5097
.950	.5053	.6053	.4709	.5571	.4098

NAAL 737 OA143 ORB/B66-NOSE GEAR RT SDWALL CPS (RFCN10) (14 MAY 75)

REFERENCE DATA

SREF =	2690.0000 SQ.FT.	XMRP =	1076.7000 IN.XO
LREF =	474.8000 IN.	YMRP =	.0000 IN.YO
BREF =	936.6800 IN.	ZMRP =	375.0000 IN.ZO
SCALE =	.0405		

PARAMETRIC DATA

BETA =	8.000	BDFLAP =	-11.700
ELEVON =	10.000	RUDDER =	.000
SPDBRK =	25.000	GRDPLN =	1.000
LNGRPS =	1.000	LNDGDR =	100.000

SECTION (1)NS GR RT SWAL CPS DEPENDENT VARIABLE CP

MACH (1) = .200 ALPHA (1) = .110

X/L	.050	.250	.500	.750	.950
X/LD					
.050	-.0897	-.0377	-.0600	-.0224	.1261
.500	-.0074	-.0662	-.0763	-.0700	.0399
.950	.0387	-.0764	-.0803	-.0467	-.0334

MACH (1) = .200 ALPHA (2) = 5.430

X/L	.050	.250	.500	.750	.950
X/LD					
.050	.0208	.0932	.1073	.1294	.2380
.500	.1157	.0854	.0758	.0851	.1920
.950	.1373	.0676	.0725	.1053	.0835

MACH (1) = .200 ALPHA (3) = 10.830

X/L	.050	.250	.500	.750	.950
X/LD					
.050	.1305	.2269	.2574	.2709	.3623
.500	.2390	.2289	.2231	.2340	.3194
.950	.2548	.2148	.2274	.2518	.1934

MACH (1) = .200 ALPHA (4) = 16.230

X/L	.050	.250	.500	.750	.950
X/LD					
.050	.2327	.3621	.3919	.4134	.4834
.500	.3647	.3664	.3595	.3687	.4484
.950	.3794	.3777	.3804	.4053	.3050

MACH (1) = .200 ALPHA (5) = 19.430

X/L	.050	.250	.500	.750	.950
X/LD					
.050	.2950	.4437	.4779	.4900	.5457
.500	.4464	.4490	.4427	.4469	.5151
.950	.4537	.5021	.4665	.5115	.3690

NAAL 737 OA143 ORB/B66-NOSE GEAR RT SDWALL CPS (RFCN11) (14 MAY 75)

REFERENCE DATA

SREF = 2690.0000 SQ.FT. XMRP = 1076.7000 IN.XO
LREF = 474.8000 IN. YMRP = .0000 IN.YO
BREF = 936.6800 IN. ZMRP = 375.0000 IN.ZO
SCALE = .0405

PARAMETRIC DATA

BETA = .000 BDFLAP = -11.700
ELEVON = 15.000 RUDDER = .000
SPDBRK = 25.000 GRDPLN = 1.000
LNGRPS = 1.000 LNDGDR = 100.000

SECTION (1)NS GR RT SWAL CPS DEPENDENT VARIABLE CP

MACH (1) = .200 ALPHA (1) = .190

X/L	.050	.250	.500	.750	.950
X/LD					
.050	-.0857	-.0111	-.0521	-.0261	.0957
.500	-.0013	-.0483	-.0697	-.0764	-.0081
.950	.0354	.1735	-.0474	.0150	.0645

MACH (1) = .200 ALPHA (2) = 5.560

X/L	.050	.250	.500	.750	.950
X/LD					
.050	.0175	.1166	.0826	.1134	.2098
.500	.1368	.0872	.0713	.0667	.1349
.950	.1726	.3223	.0928	.1717	.1720

MACH (1) = .200 ALPHA (3) = 10.920

X/L	.050	.250	.500	.750	.950
X/LD					
.050	.1339	.2551	.2300	.2426	.3264
.500	.2783	.2282	.2346	.2191	.2828
.950	.3075	.4213	.2353	.3409	.2861

MACH (1) = .200 ALPHA (4) = 16.300

X/L	.050	.250	.500	.750	.950
X/LD					
.050	.2463	.3966	.3814	.3909	.4399
.500	.4049	.3850	.3824	.3797	.4265
.950	.4282	.5539	.3958	.5369	.3820

MACH (1) = .200 ALPHA (5) = 19.510

X/L	.050	.250	.500	.750	.950
X/LD					
.050	.3060	.4749	.4639	.4733	.5102
.500	.4821	.4620	.4678	.4610	.5073
.950	.5072	.6200	.4849	.6250	.4308

NAAL 737 OA143 ORB/B66-NOSE GEAR RT SDWALL CPS (RFCN12) (14 MAY 75)

REFERENCE DATA

SREF = 2690.0000 SQ.FT. XMRP = 1076.7000 IN.XO
LREF = 474.8000 IN. YMRP = .0000 IN.YO
BREF = 936.6800 IN. ZMRP = 375.0000 IN.ZO
SCALE = .0405

PARAMETRIC DATA

BETA = -4.000 BDFLAP = -11.700
ELEVON = 15.000 RUDDER = .000
SPDBRK = 25.000 GRDPLN = 1.000
LNGRPS = 1.000 LNDGDR = 100.000

SECTION (1)NS GR RT SWAL CPS DEPENDENT VARIABLE CP

MACH (1) = .200 ALPHA (1) = .200

X/L	.050	.250	.500	.750	.950
X/LD					
.050	-.0836	-.0084	-.0533	-.0553	.0650
.500	-.0023	-.0349	-.0560	-.0723	.0153
.950	.0313	.2650	-.0334	.0962	.1184

MACH (1) = .200 ALPHA (2) = 5.570

X/L	.050	.250	.500	.750	.950
X/LD					
.050	.0144	.1182	.0835	.0759	.1934
.500	.1296	.0922	.0769	.0683	.1577
.950	.1606	.3530	.1044	.2732	.1593

MACH (1) = .200 ALPHA (3) = 10.970

X/L	.050	.250	.500	.750	.950
X/LD					
.050	.1243	.2549	.2293	.2197	.3235
.500	.2700	.2315	.2210	.2187	.3047
.950	.2982	.4714	.2520	.4453	.2741

MACH (1) = .200 ALPHA (4) = 16.300

X/L	.050	.250	.500	.750	.950
X/LD					
.050	.2399	.3914	.3975	.3762	.4649
.500	.4121	.3760	.3851	.3729	.4616
.950	.4459	.5903	.4094	.5992	.4015

MACH (1) = .200 ALPHA (5) = 19.500

X/L	.050	.250	.500	.750	.950
X/LD					
.050	.3005	.4631	.4810	.4670	.5429
.500	.4940	.4591	.4683	.4644	.5397
.950	.5285	.6552	.4950	.6649	.4611

NAAL 737 OA143 ORB/B66-NOSE GEAR RT SDWALL CPS (RFCN13) (14 MAY 75)

REFERENCE DATA

SREF = 2690.0000 SQ.FT. XMRP = 1076.7000 IN.XO
LREF = 474.8000 IN. YMRP = .0000 IN.YO
BREF = 936.6800 IN. ZMRP = 375.0000 IN.ZO
SCALE = .0405

PARAMETRIC DATA

BETA = -8.000 BDFLAP = -11.700
ELEVON = 15.000 RUDDER = .000
SPDBRK = 25.000 GRDPLN = 1.000
LNGRPS = 1.000 LNDGDR = 100.000

SECTION (1)NS GR RT SWAL CPS DEPENDENT VARIABLE CP

MACH (1) = .200 ALPHA (1) = .210

X/L	.050	.250	.500	.750	.950
X/LD					
.050	-.0884	-.0226	-.0575	-.0787	.0618
.500	-.0037	-.0453	-.0671	-.0810	.0367
.950	.0426	.3028	-.0276	.2006	.0552

MACH (1) = .200 ALPHA (2) = 5.590

X/L	.050	.250	.500	.750	.950
X/LD					
.050	.0127	.0793	.1099	.0642	.2137
.500	.1490	.0760	.0834	.0821	.1992
.950	.1753	.4118	.1383	.3757	.1350

MACH (1) = .200 ALPHA (3) = 10.970

X/L	.050	.250	.500	.750	.950
X/LD					
.050	.1253	.2243	.2465	.2202	.3421
.500	.2701	.2343	.2117	.2265	.3329
.950	.2942	.5239	.2941	.4900	.2406

MACH (1) = .200 ALPHA (4) = 16.340

X/L	.050	.250	.500	.750	.950
X/LD					
.050	.2317	.3723	.3801	.3663	.4719
.500	.3836	.3666	.3538	.3712	.4759
.950	.4290	.6077	.4375	.5966	.3509

MACH (1) = .200 ALPHA (5) = 19.520

X/L	.050	.250	.500	.750	.950
X/LD					
.050	.2899	.4540	.4587	.4483	.5364
.500	.4634	.4464	.4395	.4439	.5491
.950	.5125	.6530	.5100	.6530	.4163

NAAL 737 OA143 ORB/B66-NOSE GEAR RT SDWALL CPS (RFCN14) (14 MAY 75)

REFERENCE DATA

SREF =	2690.0000 SQ.FT.	XMRP =	1076.7000 IN.XO		
LREF =	474.8000 IN.	YMRP =	.0000 IN.YO		
BREF =	936.6800 IN.	ZMRP =	375.0000 IN.ZO		
SCALE =	.0405				

PARAMETRIC DATA

BETA =	4.000	BDFLAP =	-11.700
ELEVON =	15.000	RUDDER =	.000
SPDBRK =	25.000	GRDPLN =	1.000
LNGRPS =	1.000	LNDGDR =	100.000

SECTION (1)NS GR RT SWAL CPS DEPENDENT VARIABLE CP

MACH (1) = .200 ALPHA (1) = .170

X/L	.050	.250	.500	.750	.950
X/LD					
.050	-.0860	-.0217	-.0544	-.0181	.1122
.500	.0036	-.0622	-.0717	-.0660	-.0128
.950	.0411	-.0329	-.0610	-.0118	.0097

MACH (1) = .200 ALPHA (2) = 5.550

X/L	.050	.250	.500	.750	.950
X/LD					
.050	.0127	.1093	.0831	.1158	.2137
.500	.1298	.0766	.0699	.0755	.1271
.950	.1692	.1466	.0798	.1323	.1211

MACH (1) = .200 ALPHA (3) = 10.910

X/L	.050	.250	.500	.750	.950
X/LD					
.050	.1272	.2481	.2288	.2604	.3360
.500	.2649	.2229	.2192	.2274	.2743
.950	.3045	.3747	.2281	.2984	.2489

MACH (1) = .200 ALPHA (4) = 16.300

X/L	.050	.250	.500	.750	.950
X/LD					
.050	.2410	.3885	.3770	.4061	.4501
.500	.3975	.3762	.3721	.3813	.4207
.950	.4303	.5207	.3914	.4681	.3633

MACH (1) = .200 ALPHA (5) = 19.500

X/L	.050	.250	.500	.750	.950
X/LD					
.050	.3074	.4722	.4713	.4870	.5367
.500	.4722	.4612	.4615	.4667	.5151
.950	.5034	.6083	.4749	.5609	.4187

NAAL 737 OA143 ORB/B66-NOSE GEAR RT SDWALL CPS (RFCN15) (14 MAY 75)

REFERENCE DATA

SREF =	2690.0000 SQ.FT.	XMRP =	1076.7000 IN.XO		
LREF =	474.8000 IN.	YMRP =	.0000 IN.YO		
BREF =	936.6800 IN.	ZMRP =	375.0000 IN.ZO		
SCALE =	.0405				

PARAMETRIC DATA

BETA =	8.000	BDFLAP =	-11.700
ELEVON =	15.000	RUDDER =	.000
SPDBRK =	25.000	GRDPLN =	1.000
LNGRPS =	1.000	LNDGDR =	100.000

SECTION (1)NS GR RT SWAL CPS DEPENDENT VARIABLE CP

MACH (1) = .200 ALPHA (1) = .200

X/L	.050	.250	.500	.750	.950
X/LD					
.050	-.0911	-.0382	-.0592	-.0223	.1280
.500	-.0057	-.0643	-.0738	-.0688	.0407
.950	.0376	-.0745	-.0797	-.0442	-.0339

MACH (1) = .200 ALPHA (2) = 5.550

X/L	.050	.250	.500	.750	.950
X/LD					
.050	.0178	.0939	.1063	.1269	.2401
.500	.1178	.0865	.0769	.0861	.1977
.950	.1391	.0697	.0709	.1060	.0838

MACH (1) = .200 ALPHA (3) = 10.930

X/L	.050	.250	.500	.750	.950
X/LD					
.050	.1285	.2261	.2551	.2715	.3618
.500	.2374	.2281	.2190	.2354	.3211
.950	.2575	.2160	.2292	.2531	.1934

MACH (1) = .200 ALPHA (4) = 16.300

X/L	.050	.250	.500	.750	.950
X/LD					
.050	.2307	.3624	.3975	.4185	.4824
.500	.3670	.3687	.3611	.3703	.4512
.950	.3804	.3830	.3798	.4126	.3074

MACH (1) = .200 ALPHA (5) = 19.510

X/L	.050	.250	.500	.750	.950
X/LD					
.050	.2921	.4450	.4758	.4927	.5486
.500	.4486	.4519	.4462	.4495	.5158
.950	.4546	.5082	.4683	.5161	.3711

NAAL 737 OA143 ORB/B66-NOSE GEAR RT SDWALL CPS (RFCN16) (14 MAY 75)

REFERENCE DATA

SREF =	2690.0000 SQ.FT.	XMRP =	1076.7000 IN.XO		
LREF =	474.8000 IN.	YMRP =	.0000 IN.YO		
BREF =	936.6800 IN.	ZMRP =	375.0000 IN.ZO		
SCALE =	.0405				

PARAMETRIC DATA

BETA =	.000	BDFLAP =	-11.700
ELEVON =	15.000	RUDDER =	.000
SPDBRK =	25.000	GRDPLN =	.000
LNGRPS =	1.000	LNDGDR =	100.000

SECTION (1)NS GR RT SWAL CPS DEPENDENT VARIABLE CP

MACH (1) = .230 ALPHA (1) = .120

X/L	.050	.250	.500	.750	.950
X/LD					
.050	-.1024	-.0530	-.0908	-.0662	.0543
.500	-.0444	-.0875	-.1135	-.1167	-.0495
.950	-.0099	.1238	-.0889	-.0255	.0278

MACH (1) = .230 ALPHA (2) = 5.370

X/L	.050	.250	.500	.750	.950
X/LD					
.050	-.0005	.0809	.0480	.0776	.1757
.500	.1027	.0555	.0363	.0302	.1016
.950	.1392	.3025	.0595	.1397	.1392

MACH (1) = .230 ALPHA (3) = 10.620

X/L	.050	.250	.500	.750	950
X/LD					
.050	.1148	.2237	.1984	.2138	.2959
.500	.2446	.1969	.2045	.1912	.2545
.950	.2762	.4028	.2098	.3239	.2617

MACH (1) = .230 ALPHA (4) = 15.880

X/L	.050	.250	.500	.750	.950
X/LD					
.050	.2341	.3759	.3590	.3670	.4216
.500	.3805	.3590	.3526	.3579	.4066
.950	.4115	.5462	.3700	.5184	.3531

MACH (1) = .230 ALPHA (5) = 19.030

X/L	.050	.250	.500	.750	.950
X/LD					
.050	.2927	.4520	.4554	.4520	.5065
.500	.4609	.4414	.4456	.4416	.4975
.950	.4916	.6189	.4573	.6205	.4072

NAAL 737 OA143 ORB/B66-NOSE GEAR RT SDWALL CPS (RFCN17) (14 MAY 75)

REFERENCE DATA

SREF = 2690.0000 SQ.FT. XMRP = 1076.7000 IN.XO
LREF = 474.8000 IN. YMRP = .0000 IN.YO
BREF = 936.6800 IN. ZMRP = 375.0000 IN.ZO
SCALE = .0405

PARAMETRIC DATA

BETA = -4.000 BDFLAP = -11.700
ELEVON = 15.000 RUDDER = .000
SPDBRK = 25.000 GRDPLN = .000
LNGRPS = 1.000 LNDGDR = 100.000

SECTION (1)NS GR RT SWAL CPS DEPENDENT VARIABLE CP

MACH (1) = .230 ALPHA (1) = .130

X/L	.050	.250	.500	.750	.950
X/LD					
.050	-.1014	-.0498	-.0948	-.0969	.0234
.500	-.0456	-.0781	-.1001	-.1165	-.0329
.950	-.0074	.2470	-.0762	.0377	.0890

MACH (1) = .230 ALPHA (2) = 5.410

X/L	.050	.250	.500	.750	.950
X/LD					
.050	.0013	.0844	.0466	.0394	.1648
.500	.0948	.0571	.0404	.0319	.1276
.950	.1277	.3290	.0645	.2341	.1316

MACH (1) = .230 ALPHA (3) = 10.640

X/L	.050	.250	.500	.750	.950
X/LD					
.050	.1142	.2252	.1995	.1909	.3068
.500	.2424	.1994	.1925	.1866	.2854
.950	.2764	.4532	.2230	.4283	.2383

MACH (1) = .230 ALPHA (4) = 15.910

X/L	.050	.250	.500	.750	.950
X/LD					
.050	.2218	.3655	.3703	.3512	.4542
.500	.3920	.3524	.3587	.3464	.4448
.950	.4280	.5794	.3880	.5858	.3729

MACH (1) = .230 ALPHA (5) = 19.060

X/L	.050	.250	.500	.750	.950
X/LD					
.050	.2953	.4481	.4579	.4468	.5261
.500	.4725	.4513	.4460	.4417	.5240
.950	.5044	.6556	.4806	.6571	.4217

NAAL 737 OA143 ORB/B66-NOSE GEAR RT SDWALL CPS (RFCN18) (14 MAY 75)

REFERENCE DATA

SREF = 2690.0000 SQ.FT. XMRP = 1076.7000 IN.XO
LREF = 474.8000 IN. YMRP = .0000 IN.YO
BREF = 936.6800 IN. ZMRP = 375.0000 IN.ZO
SCALE = .0405

PARAMETRIC DATA

BETA = -8.000 BDFLAP = -11.700
ELEVON = 15.000 RUDDER = .000
SPDBRK = 25.000 GRDPLN = .000
LNGRPS = 1.000 LNDGDR = 100.000

SECTION (1)NS GR RT SWAL CPS DEPENDENT VARIABLE CP

MACH (1) = .230 ALPHA (1) = .140

X/L	.050	.250	.500	.750	.950
X/LD					
.050	-.1042	-.0585	-.1009	-.1165	.0215
.500	-.0481	-.0822	-.1079	-.1216	-.0141
.950	-.0036	.2546	-.0727	.1199	.0506

MACH (1) = .230 ALPHA (2) = 5.420

X/L	.050	.250	.500	.750	.950
X/LD					
.050	.0021	.0521	.0778	.0308	.1858
.500	.1164	.0426	.0540	.0447	.1672
.950	.1446	.3837	.1011	.3430	.1150

MACH (1) = .230 ALPHA (3) = 10.650

X/L	.050	.250	.500	.750	.950
X/LD					
.050	.1103	.1955	.2232	.1959	.3221
.500	.2469	.2072	.1841	.1988	.3064
.950	.2711	.5098	.2719	.4709	.2157

MACH (1) = .230 ALPHA (4) = 15.920

X/L	.050	.250	.500	.750	.950
X/LD					
.050	.2161	.3464	.3600	.3416	.4549
.500	.3581	.3404	.3322	.3488	.4555
.950	.4033	.5992	.4213	.5857	.3215

MACH (1) = .230 ALPHA (5) = 19.070

X/L	.050	.250	.500	.750	.950
X/LD					
.050	.2761	.4336	.4387	.4291	.5249
.500	.4388	.4244	.4208	.4317	.5329
.950	.4903	.6478	.4982	.6489	.3880

NAAL 737 OA143 ORB/B66-NOSE GEAR RT SDWALL CPS (RFCN19) (14 MAY 75)

REFERENCE DATA

SREF = 2690.0000 SQ.FT. XMRP = 1076.7000 IN.XO
LREF = 474.8000 IN. YMRP = .0000 IN.YO
BREF = 936.6800 IN. ZMRP = 375.0000 IN.ZO
SCALE = .0405

PARAMETRIC DATA

BETA = 4.000 BDFLAP = -11.700
ELEVON = 15.000 RUDDER = .000
SPDBRK = 25.000 GRDPLN = .000
LNGRPS = 1.000 LNDGDR = 100.000

SECTION (1)NS GR RT SWAL CPS DEPENDENT VARIABLE CP

MACH (1) = .230 ALPHA (1) = .150

X/L	.050	.250	.500	.750	.950
X/LD					
.050	-.1032	-.0616	-.0946	-.0590	.0779
.500	-.0353	-.1065	-.1160	-.1128	-.0569
.950	-.0003	-.0783	-.0994	-.0537	-.0223

MACH (1) = .230 ALPHA (2) = 5.360

X/L	.050	.250	.500	.750	.950
X/LD					
.050	-.0049	.0758	.0456	.0777	.1837
.500	.0988	.0410	.0324	.0397	.0929
.950	.1352	.1212	.0450	.0948	.0916

MACH (1) = .230 ALPHA (3) = 10.620

X/L	.050	.250	.500	.750	.950
X/LD					
.050	.1127	.2217	.2008	.2334	.3128
.500	.2407	.1948	.1880	.2000	.2463
.950	.2810	.3702	.1990	.2714	.2201

MACH (1) = .230 ALPHA (4) = 15.860

X/L	.050	.250	.500	.750	.950
X/LD					
.050	.2302	.3648	.3519	.3809	.4328
.500	.3764	.3523	.3492	.3567	.3982
.950	.4119	.5094	.3673	.4493	.3407

MACH (1) = .230 ALPHA (5) = 19.040

X/L	.050	.250	.500	.750	.950
X/LD					
.050	.2959	.4498	.4452	.4660	.5103
.500	.4557	.4395	.4365	.4458	.4880
.950	.4855	.5974	.4474	.5462	.3900

NAAL 737 OA143 ORB/B66-NOSE GEAR RT SDWALL CPS (RFCN20) (14 MAY 75)

REFERENCE DATA

SREF = 2690.0000 SQ.FT. XMRP = 1076.7000 IN.XO
LREF = 474.8000 IN. YMRP = .0000 IN.YO
BREF = 936.6800 IN. ZMRP = 375.0000 IN.ZO
SCALE = .0405

PARAMETRIC DATA

BETA = 8.000 BDFLAP = -11.700
ELEVON = 15.000 RUDDER = .000
SPDBRK = 25.000 GRDPLN = .000
LNGRPS = 1.000 LNDGDR = 100.000

SECTION (1)NS GR RT SWAL CPS DEPENDENT VARIABLE CP

MACH (1) = .230 ALPHA (1) = .130

X/L	.050	.250	.500	.750	.950
X/LD					
.050	-.1070	-.0808	-.0999	-.0668	.0908
.500	-.0478	-.1053	-.1141	-.1162	-.0140
.950	.0021	-.1127	-.1173	-.0879	-.0591

MACH (1) = .230 ALPHA (2) = 5.350

X/L	.050	.250	.500	.750	.950
X/LD					
.050	.0046	.0641	.0728	.0934	.2114
.500	.0897	.0510	.0427	.0489	.1559
.950	.1146	.0350	.0392	.0741	.0601

MACH (1) = .230 ALPHA (3) = 10.610

X/L	.050	.250	.500	.750	.950
X/LD					
.050	.1157	.2050	.2284	.2438	.3361
.500	.2134	.2033	.1972	.2081	.2941
.950	.2329	.1925	.1996	.2289	.1736

MACH (1) = .230 ALPHA (4) = 15.840

X/L	.050	.250	.500	.750	.950
X/LD					
.050	.2222	.3435	.3767	.3989	.4686
.500	.3468	.3509	.3374	.3516	.4280
.950	.3609	.3661	.3572	.3919	.2895

MACH (1) = .230 ALPHA (5) = 18.010

X/L	.050	.250	.500	.750	.950
X/LD					
.050	.2857	.4316	.4629	.4776	.5372
.500	.4327	.4346	.4282	.4314	.5046
.950	.4433	.5031	.4512	.5006	.3580

NAAL 737 OA143 ORB/B66-NOSE GEAR RT SDWALL CPS (RFCN21) (14 MAY 75)

REFERENCE DATA

SREF = 2690.0000 SQ.FT. XMRP = 1076.7000 IN.XO
LREF = 474.8000 IN. YMRP = .0000 IN.YO
BREF = 936.6800 IN. ZMRP = 375.0000 IN.ZO
SCALE = .0405

PARAMETRIC DATA

BETA = .000 BDFLAP = -11.700
ELEVON = 10.000 RUDDER = .000
SPDBRK = 25.000 GRDPLN = .000
LNGRPS = 1.000 LNDGDR = 100.000

SECTION (1)NS GR RT SWAL CPS DEPENDENT VARIABLE CP

MACH (1) = .230 ALPHA (1) = .080

X/L	.050	.250	.500	.750	.950
X/LD					
.050	-.0997	-.0583	-.0946	-.0663	.0514
.500	-.0457	-.0936	-.1163	-.1187	-.0515
.950	-.0161	.1256	-.0930	-.0298	.0265

MACH (1) = .230 ALPHA (2) = 5.340

X/L	.050	.250	.500	.750	.950
X/LD					
.050	.0032	.0819	.0464	.0756	.1761
.500	.1033	.0553	.0325	.0295	.1006
.950	.1375	.2988	.0574	.1367	.1429

MACH (1) = .230 ALPHA (3) = 10.550

X/L	.050	.250	.500	.750	.950
X/LD					
.050	.1184	.2198	.1959	.2113	.2964
.500	.2428	.1971	.1993	.1874	.2504
.950	.2715	.4028	.2070	.3201	.2573

MACH (1) = .230 ALPHA (4) = 15.810

X/L	.050	.250	.500	.750	.950
X/LD					
.050	.2357	.3717	.3521	.3658	.4230
.500	.3820	.3555	.3486	.3572	.4058
.950	.4093	.5489	.3709	.5196	.3521

MACH (1) = .230 ALPHA (5) = 18.980

X/L	.050	.250	.500	.750	.950
X/LD					
.050	.2970	.4551	.4487	.4545	.5039
.500	.4679	.4410	.4473	.4433	.4922
.950	.4954	.6195	.4636	.6174	.3966

NAAL 737 OA143 ORB/B66-NOSE GEAR RT SDWALL CPS (RFCN22) (14 MAY 75)

REFERENCE DATA

SREF = 2690.0000 SQ.FT. XMRP = 1076.7000 IN.XO
LREF = 474.8000 IN. YMRP = .0000 IN.YO
BREF = 936.6800 IN. ZMRP = 375.0000 IN.ZO
SCALE = .0405

PARAMETRIC DATA

BETA = -4.000 BDFLAP = -11.700
ELEVON = 10.000 RUDDER = .000
SPDBRK = 25.000 GRDPLN = .000
LNGRPS = 1.000 LNDGDR = 100.000

SECTION (1)NS GR RT SWAL CPS DEPENDENT VARIABLE CP

MACH (1) = .230 ALPHA (1) = .090

X/L	.050	.250	.500	.750	.950
X/LD					
.050	-.1013	-.0509	-.0946	-.0973	.0202
.500	-.0504	-.0782	-.0986	-.1156	-.0327
.950	-.0066	.2459	-.0776	.0326	.0888

MACH (1) = .230 ALPHA (2) = 5.300

X/L	.050	.250	.500	.750	.950
X/LD					
.050	.0051	.0817	.0459	.0433	.1635
.500	.0933	.0559	.0406	.0272	.1225
.950	.1246	.3357	.0674	.2323	.1294

MACH (1) = .230 ALPHA (3) = 10.570

X/L	.050	.250	.500	.750	.950
X/LD					
.050	.1164	.2256	.1976	.1859	.3042
.500	.2399	.1967	.1885	.1861	.2837
.950	.2697	.4501	.2207	.4240	.2332

MACH (1) = .230 ALPHA (4) = 15.810

X/L	.050	.250	.500	.750	.950
X/LD					
.050	.2263	.3640	.3652	.3479	.4475
.500	.3859	.3458	.3540	.3447	.4379
.950	.4244	.5745	.3833	.5843	.3646

MACH (1) = .230 ALPHA (5) = 18.980

X/L	.050	.250	.500	.750	.950
X/LD					
.050	.2951	.4398	.4556	.4426	.5259
.500	.4704	.4381	.4431	.4391	.5227
.950	.5059	.6460	.4753	.6585	.4186

NAAL 737 OA143 ORB/B66-NOSE GEAR RT SDWALL CPS (RFCN23) (14 MAY 75)

REFERENCE DATA

SREF =	2690.0000 SQ.FT.	XMRP =	1076.7000 IN.XO		
LREF =	474.8000 IN.	YMRP =	.0000 IN.YO		
BREF =	936.6800 IN.	ZMRP =	375.0000 IN.ZO		
SCALE =	.0405				

PARAMETRIC DATA

BETA =	-8.000	BDFLAP =	-11.700
ELEVON =	10.000	RUDDER =	.000
SPDBRK =	25.000	GRDPLN =	.000
LNGRPS =	1.000	LNDGDR =	100.000

SECTION (1)NS GR RT SWAL CPS DEPENDENT VARIABLE CP

MACH (1) = .230 ALPHA (1) = .100

X/L	.050	.250	.500	.750	.950
X/LD					
.050	-.0994	-.0586	-.1008	-.1188	.0194
.500	-.0493	-.0845	-.1081	-.1218	-.0157
.950	-.0030	.2547	-.0712	.1233	.0490

MACH (1) = .230 ALPHA (2) = 5.320

X/L	.050	.250	.500	.750	.950
X/LD					
.050	.0038	.0507	.0809	.0320	.1841
.500	.1170	.0376	.0524	.0430	.1682
.950	.1414	.3821	.0995	.3428	.1123

MACH (1) = .230 ALPHA (3) = 10.590

X/L	.050	.250	.500	.750	.950
X/LD					
.050	.1183	.1968	.2220	.1948	.3217
.500	.2465	.2085	.1852	.1988	.3043
.950	.2696	.5091	.2731	.4712	.2127

MACH (1) = .230 ALPHA (4) = 15.850

X/L	.050	.250	.500	.750	.950
X/LD					
.050	.2232	.3457	.3580	.3403	.4554
.500	.3585	.3395	.3313	.3486	.4580
.950	.4079	.5994	.4177	.5893	.3238

MACH (1) = .230 ALPHA (5) = 19.010

X/L	.050	.250	.500	.750	.950
X/LD					
.050	.2819	.4309	.4371	.4283	.5247
.500	.4391	.4236	.4222	.4318	.5298
.950	.4914	.6483	.4989	.6438	.3908

NAAL 737 OA143 ORB/B66-NOSE GEAR RT SDWALL CPS (RFCN24) (14 MAY 75)

REFERENCE DATA

SREF = 2690.0000 SQ.FT. XMRP = 1076.7000 IN.XO
LREF = 474.8000 IN. YMRP = .0000 IN.YO
BREF = 936.6800 IN. ZMRP = 375.0000 IN.ZO
SCALE = .0405

PARAMETRIC DATA

BETA = 4.000 BDFLAP = -11.700
ELEVON = 10.000 RUDDER = .000
SPDBRK = 25.000 GRDPLN = .000
LNGRPS = 1.000 LNDGDR = 100.000

SECTION (1)NS GR RT SWAL CPS DEPENDENT VARIABLE CP

MACH (1) = .230 ALPHA (1) = .070

X/L	.050	.250	.500	.750	.950
X/LD					
.050	-.1015	-.0646	-.0983	-.0628	.0806
.500	-.0390	-.1061	-.1199	-.1135	-.0572
.950	-.0030	-.0821	-.1020	-.0575	-.0268

MACH (1) = .230 ALPHA (2) = 5.290

X/L	.050	.250	.500	.750	.950
X/LD					
.050	-.0003	.0753	.0450	.0783	.1814
.500	.0969	.0402	.0306	.0378	.0919
.950	.1364	.1183	.0440	.0930	.0879

MACH (1) = .230 ALPHA (3) = 10.530

X/L	.050	.250	.500	.750	.950
X/LD					
.050	.1139	.2179	.1971	.2301	.3071
.500	.2349	.1913	.1859	.1958	.2461
.950	.2761	.3658	.1982	.2711	.2158

MACH (1) = .230 ALPHA (4) = 15.790

X/L	.050	.250	.500	.750	.950
X/LD					
.050	.2318	.3677	.3534	.3806	.4329
.500	.3772	.3492	.3489	.3555	.4003
.950	.4130	.5126	.3659	.4542	.3371

MACH (1) = .230 ALPHA (5) = 18.950

X/L	.050	.250	.500	.750	.950
X/LD					
.050	.3002	.4478	.4403	.4605	.5063
.500	.4521	.4372	.4364	.4382	.4854
.950	.4853	.5969	.4504	.5405	.3860

NAAL 737 OA143 ORB/B66-NOSE GEAR RT SDWALL CPS (RFCN25) (14 MAY 75)

REFERENCE DATA

SREF = 2690.0000 SQ.FT. XMRP = 1076.7000 IN.XO
LREF = 474.8000 IN. YMRP = .0000 IN.YO
BREF = 936.6800 IN. ZMRP = 375.0000 IN.ZO
SCALE = .0405

PARAMETRIC DATA

BETA = 8.000 BDFLAP = -11.700
ELEVON = 10.000 RUDDER = .000
SPDBRK = 25.000 GRDPLN = .000
LNGRPS = 1.000 LNDGDR = 100.000

SECTION (1)NS GR RT SWAL CPS DEPENDENT VARIABLE CP

MACH (1) = .230 ALPHA (1) = .100

X/L	.050	.250	.500	.750	.950
X/LD					
.050	-.1031	-.0822	-.1014	-.0650	.0922
.500	-.0460	-.1072	-.1186	-.1151	-.0106
.950	-.0011	-.1137	-.1197	-.0872	-.0599

MACH (1) = .230 ALPHA (2) = 5.310

X/L	.050	.250	.500	.750	.950
X/LD					
.050	.0065	.0613	.0711	.0912	.2044
.500	.0860	.0530	.0393	.0493	.1539
.950	.1146	.0291	.0369	.0762	.0608

MACH (1) = .230 ALPHA (3) = 10.550

X/L	.050	.250	.500	.750	.950
X/LD					
.050	.1210	.2029	.2294	.2433	.3381
.500	.2124	.2018	.1928	.2080	.2915
.950	.2309	.1893	.1986	.2273	.1713

MACH (1) = .230 ALPHA (4) = 15.830

X/L	.050	.250	.500	.750	.950
X/LD					
.050	.2246	.3403	.3740	.3975	.4636
.500	.3446	.3468	.3371	.3510	.4260
.950	.3577	.3618	.3556	.3940	.2864

MACH (1) = .230 ALPHA (5) = 18.970

X/L	.050	.250	.500	.750	.950
X/LD					
.050	.2894	.4269	.4561	.4766	.5334
.500	.4329	.4313	.4204	.4316	.4980
.950	.4375	.4918	.4420	.4966	.3527

NAAL 737 OA143 ORB/B66-NOSE GEAR RT SDWALL CPS (RFCN26) (14 MAY 75)

REFERENCE DATA

SREF = 2690.0000 SQ.FT. XMRP = 1076.7000 IN.XO
LREF = 474.8000 IN. YMRP = .0000 IN.YO
BREF = 936.6800 IN. ZMRP = 375.0000 IN.ZO
SCALE = .0405

PARAMETRIC DATA

BETA = 8.000 BDFLAP = -11.700
ELEVON = 10.000 RUDDER = .000
SPDBRK = 25.000 GRDPLN = .000
LNGRPS = .000 LNDGDR = .000

SECTION (1)NS GR RT SWAL CPS DEPENDENT VARIABLE CP

MACH (1) = .230 ALPHA (1) = .070

X/L	.050	.250	.500	.750	.950
X/LD					
.050	-.1977	-.1512	-.1474	-.1499	-.1493
.500	-.1482	-.1498	-.1450	-.1509	-.1509
.950	-.1498	-.1479	-.1464	-.1485	-.1482

MACH (1) = .230 ALPHA (2) = 5.330

X/L	.050	.250	.500	.750	.950
X/LD					
.050	-.1113	-.0319	-.0318	-.0294	-.0337
.500	-.0368	-.0374	-.0318	-.0316	-.0310
.950	-.0341	-.0360	-.0313	-.0316	-.0353

MACH (1) = .230 ALPHA (3) = 10.570

X/L	.050	.250	.500	.750	.950
X/LD					
.050	-.0101	.0861	.0870	.0897	.0854
.500	.0866	.0872	.0891	.0881	.0886
.950	.0875	.0897	.0889	.0902	.0883

MACH (1) = .230 ALPHA (4) = 15.850

X/L	.050	.250	.500	.750	.950
X/LD					
.050	.0917	.2153	.2092	.2156	.2113
.500	.2093	.2136	.2129	.2127	.2145
.950	.2150	.2134	.2169	.2175	.2156

MACH (1) = .230 ALPHA (5) = 19.010

X/L	.050	.250	.500	.750	.950
X/LD					
.050	.1490	.2857	.2869	.2869	.2837
.500	.2838	.2841	.2845	.2853	.2869
.950	.2835	.2860	.2858	.2885	.2896

NAAL 737 OA143 ORB/B66-NOSE GEAR RT SDWALL CPS (RFCN27) (14 MAY 75)

REFERENCE DATA

SREF =	2690.0000 SQ.FT.	XMRP =	1076.7000 IN.XO		
LREF =	474.8000 IN.	YMRP =	.0000 IN.YO		
BREF =	936.6800 IN.	ZMRP =	375.0000 IN.ZO		
SCALE =	.0405				

PARAMETRIC DATA

BETA =	8.000	BDFLAP =	-11.700
ELEVON =	10.000	RUDDER =	.000
SPDBRK =	25.000	GRDPLN =	.000
LNGRPS =	.000	LNDGDR =	40.000

SECTION (1)NS GR RT SWAL CPS DEPENDENT VARIABLE CP

MACH (1) = .230 ALPHA (1) = .080

X/L	.050	.250	.500	.750	.950
X/LD					
.050	-.1878	-.1686	-.1546	-.1495	-.0744
.500	-.1398	-.1692	-.1838	-.1875	-.1248
.950	-.1505	-.1700	-.1924	-.1752	-.2138

MACH (1) = .230 ALPHA (2) = 5.320

X/L	.050	.250	.500	.750	.950
X/LD					
.050	-.0948	-.0503	-.0324	-.0144	.0699
.500	-.0228	-.0459	-.0558	-.0601	-.0093
.950	-.0294	-.0338	-.0625	-.0654	-.0824

MACH (1) = .230 ALPHA (3) = 10.550

X/L	.050	.250	.500	.750	.950
X/LD					
.050	.0169	.0861	.1018	.1227	.2130
.500	.1122	.0905	.0795	.0816	.1270
.950	.1048	.1039	.0840	.0701	.0551

MACH (1) = .230 ALPHA (4) = 15.820

X/L	.050	.250	.500	.750	.950
X/LD					
.050	.1322	.2242	.2468	.2654	.3419
.500	.2497	.2326	.2244	.2271	.2590
.950	.2473	.2483	.2263	.2161	.1895

MACH (1) = .230 ALPHA (5) = 18.970

X/L	.050	.250	.500	.750	.950
X/LD					
.050	.1910	.3119	.3395	.3525	.4325
.500	.3186	.3219	.3050	.3047	.3632
.950	.2892	.3227	.3084	.2863	.2560

NAAL 737 OA143 ORB/B66-NOSE GEAR RT SDWALL CPS (RFCN29) (14 MAY 75)

REFERENCE DATA

SREF = 2690.0000 SQ.FT. XMRP = 1076.7000 IN.XO
LREF = 474.8000 IN. YMRP = .0000 IN.YO
BREF = 936.6800 IN. ZMRP = 375.0000 IN.ZO
SCALE = .0405

PARAMETRIC DATA

BETA = 8.000 BDFLAP = -11.700
ELEVON = 10.000 RUDDER = .000
SPDBRK = 25.000 GRDPLN = .000
LNGRPS = .000 LNOGDR = 80.000

SECTION (1)NS GR RT SWAL CPS DEPENDENT VARIABLE CP

MACH (1) = .230 ALPHA (1) = .090

X/L	.050	.250	.500	.750	.950
X/LD					
.050	-.1486	-.1264	-.1164	-.0985	.0006
.500	-.0866	-.1321	-.1599	-.1516	-.0551
.950	-.0926	-.1538	-.1709	-.1446	-.1513

MACH (1) = .230 ALPHA (2) = 5.330

X/L	.050	.250	.500	.750	.950
X/LD					
.050	-.0323	.0147	.0298	.0557	.1540
.500	.0541	.0098	-.0108	-.0100	.0697
.950	.0470	.0120	-.0304	-.0098	-.0349

MACH (1) = .230 ALPHA (3) = 10.560

X/L	.050	.250	.500	.750	.950
X/LD					
.050	.0790	.1545	.1741	.2313	.3429
.500	.1790	.1518	.1405	.1512	.2153
.950	.1841	.1724	.1442	.1289	.0876

MACH (1) = .230 ALPHA (4) = 15.810

X/L	.050	.250	.500	.750	.950
X/LD					
.050	.1957	.2970	.3231	.3738	.4747
.500	.3168	.2978	.2877	.2999	.3490
.950	.3250	.3524	.2973	.2807	.2026

MACH (1) = .230 ALPHA (5) = 18.970

X/L	.050	.250	.500	.750	.950
X/LD					
.050	.2567	.3811	.4132	.4579	.5450
.500	.3992	.3830	.3780	.3825	.4283
.950	.4047	.4540	.3879	.3628	.2664

NAAL 737 OA143 ORB/866-NOSE GEAR RT SDWALL CPS (RFCN30) (14 MAY 75)

REFERENCE DATA

SREF =	2690.0000 SQ.FT.	XMRP =	1076.7000 IN.XO		
LREF =	474.8000 IN.	YMRP =	.0000 IN.YO		
BREF =	936.6800 IN.	ZMRP =	375.0000 IN.ZO		
SCALE =	.0405				

PARAMETRIC DATA

BETA =	.000	BDFLAP =	-11.700
ELEVON =	5.000	RUDDER =	.000
SPDBRK =	25.000	GRDPLN =	.000
LNGRPS =	1.000	LNDGDR =	100.000

SECTION (1)NS GR RT SWAL CPS DEPENDENT VARIABLE CP

MACH (1) = .230 ALPHA (1) = .010

X/L	.050	.250	.500	.750	.950
X/LD					
.050	-.0966	-.0601	-.0932	-.0648	.0432
.500	-.0529	-.0949	-.1123	-.1203	-.0600
.950	-.0283	.1088	-.0927	-.0278	.0290

MACH (1) = .230 ALPHA (2) = 5.240

X/L	.050	.250	.500	.750	.950
X/LD					
.050	.0108	.0780	.0430	.0735	.1782
.500	.0944	.0526	.0262	.0201	.0983
.950	.1291	.2880	.0519	.1357	.1440

MACH (1) = .230 ALPHA (3) = 10.470

X/L	.050	.250	.500	.750	.950
X/LD					
.050	.1248	.2200	.1962	.2141	.2950
.500	.2428	.1950	.1992	.1840	.2504
.950	.2759	.4153	.2053	.3273	.2763

MACH (1) = .230 ALPHA (4) = 15.730

X/L	.050	.250	.500	.750	.950
X/LD					
.050	.2390	.3694	.3580	.3668	.4215
.500	.3833	.3552	.3665	.3529	.4030
.950	.4130	.5573	.3687	.5290	.3724

MACH (1) = .230 ALPHA (5) = 18.890

X/L	.050	.250	.500	.750	.950
X/LD					
.050	.3016	.4591	.4464	.4520	.4957
.500	.4619	.4444	.4432	.4464	.4890
.950	.4932	.6272	.4622	.6309	.4159

NAAL 737 OA143 ORB/B66-NOSE GEAR RT SDWALL CPS (RFCN31) (14 MAY 75)

REFERENCE DATA

SREF = 2690.0000 SQ.FT. XMRP = 1076.7000 IN.XO
LREF = 474.8000 IN. YMRP = .0000 IN.YO
BREF = 936.6800 IN. ZMRP = 375.0000 IN.ZO
SCALE = .0405

PARAMETRIC DATA

BETA = -4.000 BDFLAP = -11.700
ELEVON = 5.000 RUDDER = .000
SPDBRK = 25.000 GRDPLN = .000
LNGRPS = 1.000 LNDGDR = 100.000

SECTION (1)NS GR RT SWAL CPS DEPENDENT VARIABLE CP

MACH (1) = .230 ALPHA (1) = .000

X/L	.050	.250	.500	.750	.950
X/LD					
.050	-.0974	-.0551	-.0981	-.0972	.0070
.500	-.0551	-.0820	-.1037	-.1171	-.0401
.950	-.0154	.2403	-.0758	.0550	.1017

MACH (1) = .230 ALPHA (2) = 5.250

X/L	.050	.250	.500	.750	.950
X/LD					
.050	.0084	.0838	.0451	.0403	.1593
.500	.0909	.0578	.0413	.0295	.1242
.950	.1236	.3551	.0660	.2371	.1898

MACH (1) = .230 ALPHA (3) = 10.480

X/L	.050	.250	.500	.750	.950
X/LD					
.050	.1234	.2273	.1956	.1919	.3008
.500	.2374	.1987	.1892	.1868	.2812
.950	.2662	.4617	.2197	.4249	.2646

MACH (1) = .230 ALPHA (4) = 15.760

X/L	.050	.250	.500	.750	.950
X/LD					
.050	.2325	.3643	.3650	.3487	.4434
.500	.3857	.3482	.3570	.3463	.4365
.950	.4194	.5851	.3834	.5862	.3732

MACH (1) = .230 ALPHA (5) = 18.910

X/L	.050	.250	.500	.750	.950
X/LD					
.050	.3011	.4432	.4591	.4452	.5276
.500	.4723	.4405	.4460	.4396	.5220
.950	.5075	.6488	.4753	.6571	.4330

NAAL 737 OA143 ORB/B66-NOSE GEAR RT SDWALL CPS (RFCN32) (14 MAY 75)

REFERENCE DATA

SREF = 2690.0000 SQ.FT. XMRP = 1076.7000 IN.XO
LREF = 474.8000 IN. YMRP = .0000 IN.YO
BREF = 936.6800 IN. ZMRP = 375.0000 IN.ZO
SCALE = .0405

PARAMETRIC DATA

BETA = -8.000 BDFLAP = -11.700
ELEVON = 5.000 RUDDER = .000
SPDBRK = 25.000 GRDPLN = .000
LNGRPS = 1.000 LNDGDR = 100.000

SECTION (1)NS GR RT SWAL CPS DEPENDENT VARIABLE CP

MACH (1) = .230 ALPHA (1) = .050

X/L	.050	.250	.500	.750	.950
X/LD					
.050	-.0949	-.0592	-.0991	-.1163	.0161
.500	-.0477	-.0850	-.1026	-.1240	-.0074
.950	-.0022	.2746	-.0717	.1358	.0679

MACH (1) = .230 ALPHA (2) = 5.250

X/L	.050	.250	.500	.750	.950
X/LD					
.050	.0120	.0466	.0822	.0371	.1789
.500	.1155	.0411	.0457	.0489	.1713
.950	.1408	.3834	.1040	.3509	.1402

MACH (1) = .230 ALPHA (3) = 10.520

X/L	.050	.250	.500	.750	.950
X/LD					
.050	.1222	.1967	.2202	.1947	.3180
.500	.2449	.2056	.1808	.2008	.3061
.950	.2699	.5121	.2682	.4748	.2298

MACH (1) = .230 ALPHA (4) = 15.790

X/L	.050	.250	.500	.750	.950
X/LD					
.050	.2296	.3455	.3567	.3446	.4542
.500	.3577	.3433	.3347	.3487	.4580
.950	.4082	.5990	.4186	.5887	.3396

MACH (1) = .230 ALPHA (5) = 18.960

X/L	.050	.250	.500	.750	.950
X/LD					
.050	.2833	.4316	.4340	.4324	.5202
.500	.4367	.4235	.4202	.4314	.5332
.950	.4900	.6473	.4976	.6478	.3984

NAAL 737 OA143 ORB/B66-NOSE GEAR RT SDWALL CPS (RFCN33) (14 MAY 75)

REFERENCE DATA

SREF = 2690.0000 SQ.FT. XMRP = 1076.7000 IN.XO
LREF = 474.8000 IN. YMRP = .0000 IN.YO
BREF = 936.6800 IN. ZMRP = 375.0000 IN.ZO
SCALE = .0405

PARAMETRIC DATA

BETA = 4.000 BDFLAP = -11.700
ELEVON = 5.000 RUDDER = .000
SPDBRK = 25.000 GROPLN = .000
LNGRPS = 1.000 LNDGDR = 100.000

SECTION (1)NS GR RT SWAL CPS DEPENDENT VARIABLE CP

MACH (1) = .230 ALPHA (1) = .010

X/L	.050	.250	.500	.750	.950
X/LD					
.050	-.0965	-.0681	-.1023	-.0688	.0736
.500	-.0419	-.1124	-.1235	-.1206	-.0613
.950	-.0041	-.0863	-.1087	-.0648	-.0257

MACH (1) = .230 ALPHA (2) = 5.230

X/L	.050	.250	.500	.750	.950
X/LD					
.050	.0087	.0702	.0459	.0757	.1774
.500	.0937	.0348	.0293	.0363	.0921
.950	.1305	.1124	.0381	.0969	.0926

MACH (1) = .230 ALPHA (3) = 10.470

X/L	.050	.250	.500	.750	.950
X/LD					
.050	.1199	.2186	.1976	.2291	.3043
.500	.2314	.1920	.1821	.1976	.2432
.950	.2719	.3566	.1976	.2750	.2178

MACH (1) = .230 ALPHA (4) = 15.750

X/L	.050	.250	.500	.750	.950
X/LD					
.050	.2346	.3662	.3570	.3789	.4296
.500	.3755	.3502	.3464	.3578	.3981
.950	.4097	.5009	.3645	.4504	.3421

MACH (1) = .230 ALPHA (5) = 18.910

X/L	.050	.250	.500	.750	.950
X/LD					
.050	.3029	.4512	.4512	.4648	.5090
.500	.4539	.4428	.4429	.4429	.4888
.950	.4873	.5936	.4472	.5452	.3928

NAAL 737 OA143 ORB/B66-NOSE GEAR RT SDWALL CPS (RFCN34) (14 MAY 75)

REFERENCE DATA

SREF =	2690.0000 SQ.FT.	XMRP =	1076.7000 IN.XO		
LREF =	474.8000 IN.	YMRP =	.0000 IN.YO		
BREF =	936.6800 IN.	ZMRP =	375.0000 IN.ZO		
SCALE =	.0405				

PARAMETRIC DATA

BETA =	8.000	BDFLAP =	-11.700
ELEVON =	5.000	RUDDER =	.000
SPDBRK =	25.000	GRDPLN =	.000
LNGRPS =	1.000	LNDGDR =	100.000

SECTION (1)NS GR RT SWAL CPS DEPENDENT VARIABLE CP

MACH (1) = .230 ALPHA (1) = -4.170

X/L	.050	.250	.500	.750	.950
X/LD					
.050	-.1791	-.1953	-.2160	-.1758	-.0033
.500	-.1548	-.2219	-.2315	-.2318	-.1349
.950	-.1112	-.2337	-.2337	-.2101	-.1482

MACH (1) = .230 ALPHA (2) = -2.060

X/L	.050	.250	.500	.750	.950
X/LD					
.050	-.1415	-.1412	-.1613	-.1245	.0417
.500	-.1036	-.1687	-.1785	-.1734	-.0751
.950	-.0555	-.1780	-.1788	-.1503	-.0979

MACH (1) = .230 ALPHA (3) = .020

X/L	.050	.250	.500	.750	.950
X/LD					
.050	-.0954	-.0839	-.1039	-.0682	.0842
.500	-.0474	-.1088	-.1210	-.1127	-.0076
.950	-.0038	-.1272	-.1226	-.0870	-.0561

MACH (1) = .230 ALPHA (4) = 2.090

X/L	.050	.250	.500	.750	.950
X/LD					
.050	-.0568	-.0231	-.0420	-.0058	.1283
.500	.0054	-.0500	-.0594	-.0479	.0586
.950	.0471	-.0769	-.0565	-.0216	-.0154

MACH (1) = .230 ALPHA (5) = 4.170

X/L	.050	.250	.500	.750	.950
X/LD					
.050	-.0107	.0312	.0432	.0703	.1828
.500	.0556	.0186	.0121	.0234	.1305
.950	.0803	-.0058	.0038	.0414	.0320

MACH (1) = .230 ALPHA (6) = 6.270

X/L	.050	.250	.500	.750	.950
X/LD					
.050	.0354	.0858	.1139	.1249	.2329
.500	.1106	.0825	.0765	.0861	.1908
.950	.1273	.0577	.0708	.1044	.0762

MACH (1) = .230 ALPHA (7) = 8.370

X/L	.050	.250	.500	.750	.950
X/LD					
.050	.0791	.1407	.1712	.1832	.2814
.500	.1541	.1418	.1329	.1447	.2432
.950	.1760	.1199	.1377	.1599	.1270

NAAL 737 OA143 ORB/B66-NOSE GEAR RT SDWALL CPS (RFCN34)

SECTION (1)NS GR RT SWAL CPS DEPENDENT VARIABLE CP

MACH (1) = .230 ALPHA (8) = 10.470

X/L	.050	.250	.500	.750	.950
X/LD					
.050	.1206	.1961	.2305	.2441	.3350
.500	.2100	.1980	.1907	.2075	.2981
.950	.2266	.1822	.2027	.2222	.1709

MACH (1) = .230 ALPHA (9) = 12.570

X/L	.050	.250	.500	.750	.950
X/LD					
.050	.1638	.2527	.2876	.3070	.3905
.500	.2608	.2570	.2502	.2662	.3508
.950	.2760	.2464	.2660	.2905	.2188

MACH (1) = .230 ALPHA (10) = 14.650

X/L	.050	.250	.500	.750	.950
X/LD					
.050	.2064	.3073	.3452	.3668	.4446
.500	.3146	.3162	.3071	.3233	.4105
.950	.3284	.3222	.3279	.3585	.2650

MACH (1) = .230 ALPHA (11) = 16.770

X/L	.050	.250	.500	.750	.950
X/LD					
.050	.2461	.3700	.4022	.4243	.4911
.500	.3758	.3760	.3672	.3776	.4599
.950	.3831	.4046	.3880	.4241	.3164

MACH (1) = .230 ALPHA (12) = 18.880

X/L	.050	.250	.500	.750	.950
X/LD					
.050	.2903	.4259	.4575	.4795	.5359
.500	.4303	.4305	.4226	.4322	.5064
.950	.4384	.5001	.4463	.4979	.3609

NAAL 737 OA143 ORB/865-NOSE GEAR RT SDWALL CPS (RFCN35) (14 MAY 75)

REFERENCE DATA

SREF = 2690.0000 SQ.FT. XMRP = 1076.7000 IN.XO
LREF = 474.8000 IN. YMRP = .0000 IN.YO
BREF = 936.6800 IN. ZMRP = 375.0000 IN.ZO
SCALE = .0405

PARAMETRIC DATA

BETA = .000 BDFLAP = -11.700
ELEVON = 5.000 RUDDER = .000
SPDBRK = 25.000 GRDPLN = .000
LNGRPS = 1.000 LNDGDR = 100.000

SECTION (1)NS GR RT SWAL CPS DEPENDENT VARIABLE CP

MACH (1) = .230 ALPHA (1) = .030

X/L	.050	.250	.500	.750	.950
X/LD					
.050	-.0941	-.0623	-.0957	-.0651	.0459
.500	-.0494	-.0914	-.1163	-.1163	-.0568
.950	-.0239	.1061	-.0919	-.0267	.0347

MACH (1) = .230 ALPHA (2) = 5.230

X/L	.050	.250	.500	.750	.950
X/LD					
.050	.0087	.0809	.0450	.0725	.1752
.500	.0959	.0557	.0300	.0268	.0966
.950	.1323	.2799	.0535	.1394	.1423

MACH (1) = .230 ALPHA (3) = 10.470

X/L	.050	.250	.500	.750	.950
X/LD					
.050	.1249	.2218	.1945	.2140	.2931
.500	.2444	.1930	.2031	.1841	.2525
.950	.2756	.4162	.2052	.3246	.2733

MACH (1) = .230 ALPHA (4) = 15.750

X/L	.050	.250	.500	.750	.950
X/LD					
.050	.2400	.3703	.3567	.3663	.4248
.500	.3825	.3561	.3618	.3492	.4026
.950	.4127	.5535	.3693	.5226	.3741

MACH (1) = .230 ALPHA (5) = 18.910

X/L	.050	.250	.500	.750	.950
X/LD					
.050	.3032	.4588	.4471	.4562	.4972
.500	.4626	.4473	.4447	.4471	.4918
.950	.4942	.6288	.4640	.6195	.4150

NAAL 737 OA143 ORB/B65-NOSE GEAR RT SDWALL CPS (RFCN36) (14 MAY 75)

REFERENCE DATA

SREF =	2690.0000 SQ.FT.	XMRP =	1076.7000 IN.XO		
LREF =	474.8000 IN.	YMRP =	.0000 IN.YO		
BREF =	936.6800 IN.	ZMRP =	375.0000 IN.ZO		
SCALE =	.0405				

PARAMETRIC DATA

BETA =	-4.000	BDFLAP =	-11.700
ELEVON =	5.000	RUDDER =	.000
SPDBRK =	25.000	GRDPLN =	.000
LNGRPS =	1.000	LNDGDR =	100.000

SECTION (1)NS GR RT SWAL CPS DEPENDENT VARIABLE CP

MACH (1) = .230 ALPHA (1) = .000

X/L	.050	.250	.500	.750	.950
X/LD					
.050	-.0972	-.0585	-.1006	-.0944	.0108
.500	-.0552	-.0813	-.1011	-.1197	-.0377
.950	-.0129	.2438	-.0794	.0505	.1059

MACH (1) = .230 ALPHA (2) = 5.260

X/L	.050	.250	.500	.750	.950
X/LD					
.050	.0104	.0843	.0452	.0377	.1570
.500	.0906	.0535	.0452	.0293	.1266
.950	.1244	.3524	.0680	.2411	.1913

MACH (1) = .230 ALPHA (3) = 10.490

X/L	.050	.250	.500	.750	.950
X/LD					
.050	.1217	.2250	.1953	.1911	.3015
.500	.2381	.1976	.1873	.1841	.2772
.950	.2682	.4636	.2191	.4228	.2681

MACH (1) = .230 ALPHA (4) = 15.770

X/L	.050	.250	.500	.750	.950
X/LD					
.050	.2320	.3622	.3637	.3496	.4422
.500	.3823	.3482	.3496	.3443	.4334
.950	.4218	.5856	.3802	.5840	.3741

MACH (1) = .230 ALPHA (5) = 18.920

X/L	.050	.250	.500	.750	.950
X/LD					
.050	.2957	.4372	.4573	.4406	.5273
.500	.4697	.4350	.4448	.4366	.5193
.950	.5078	.6471	.4722	.6562	.4406

NAAL 737 OA143 ORB/B65-NOSE GEAR RT SDWALL CPS (RFCN37) (14 MAY 75)

REFERENCE DATA

SREF = 2690.0000 SQ.FT. XMRP = 1076.7000 IN.XO
LREF = 474.8000 IN. YMRP = .0000 IN.YO
BREF = 936.6800 IN. ZMRP = 375.0000 IN.ZO
SCALE = .0405

PARAMETRIC DATA

BETA = -8.000 BDFLAP = -11.700
ELEVON = 5.000 RUDDER = .000
SPDBRK = 25.000 GRDPLN = .000
LNGRPS = 1.000 LNDGDR = 100.000

SECTION (1)NS GR RT SWAL CPS DEPENDENT VARIABLE CP

MACH (1) = .230 ALPHA (1) = .030

X/L	.050	.250	.500	.750	.950
X/LD					
.050	-.0963	-.0626	-.0997	-.1160	.0151
.500	-.0513	-.0886	-.1083	-.1268	-.0125
.950	-.0036	.2716	-.0715	.1248	.0792

MACH (1) = .230 ALPHA (2) = 5.250

X/L	.050	.250	.500	.750	.950
X/LD					
.050	.0101	.0441	.0779	.0317	.1796
.500	.1141	.0408	.0513	.0459	.1697
.950	.1377	.3830	.0991	.3476	.1570

MACH (1) = .230 ALPHA (3) = 10.510

X/L	.050	.250	.500	.750	.950
X/LD					
.050	.1259	.1949	.2189	.1961	.3154
.500	.2469	.2082	.1844	.2018	.3045
.950	.2719	.5112	.2665	.4754	.2331

MACH (1) = .230 ALPHA (4) = 15.790

X/L	.050	.250	.500	.750	.950
X/LD					
.050	.2273	.3435	.3590	.3440	.4537
.500	.3582	.3408	.3344	.3483	.4588
.950	.4071	.5963	.4179	.5863	.3438

MACH (1) = .230 ALPHA (5) = 18.950

X/L	.050	.250	.500	.750	.950
X/LD					
.050	.2855	.4310	.4377	.4316	.5220
.500	.4391	.4274	.4238	.4350	.5382
.950	.4928	.6475	.4985	.6470	.4044

NAAL 737 OA143 ORB/B65-NOSE GEAR RT SDWALL CPS (RFCN38) (14 MAY 75)

REFERENCE DATA

SREF = 2690.0000 SQ.FT. XMRP = 1076.7000 IN.XO
LREF = 474.8000 IN. YMRP = .0000 IN.YO
BREF = 936.6800 IN. ZMRP = 375.0000 IN.ZO
SCALE = .0405

PARAMETRIC DATA

BETA = 4.000 BDFLAP = -11.700
ELEVON = 5.000 RUDDER = .000
SPDBRK = 25.000 GRDPLN = .000
LNGRPS = 1.000 LNDGDR = 100.000

SECTION (1)NS GR RT SWAL CPS DEPENDENT VARIABLE CP

MACH (1) = .230 ALPHA (1) = .010

X/L	.050	.250	.500	.750	.950
X/LD					
.050	-.0938	-.0678	-.0999	-.0664	.0751
.500	-.0428	-.1106	-.1241	-.1171	-.0575
.950	-.0049	-.0902	-.1069	-.0605	-.0248

MACH (1) = .230 ALPHA (2) = 5.240

X/L	.050	.250	.500	.750	.950
X/LD					
.050	.0084	.0709	.0439	.0781	.1795
.500	.0973	.0398	.0291	.0366	.0966
.950	.1348	.1177	.0383	.0977	.0913

MACH (1) = .230 ALPHA (3) = 10.090

X/L	.050	.250	.500	.750	.950
X/LD					
.050	.3082	.4522	.4551	.4671	.5139
.500	.4568	.4424	.4444	.4425	.4915
.950	.4897	.5940	.4527	.5479	.4027

MACH (1) = .230 ALPHA (4) = 10.460

X/L	.050	.250	.500	.750	.950
X/LD					
.050	.1198	.2206	.1985	.2305	.3073
.500	.2326	.1888	.1824	.1982	.2434
.950	.2710	.3599	.2003	.2722	.2201

MACH (1) = .230 ALPHA (5) = 15.730

X/L	.050	.250	.500	.750	.950
X/LD					
.050	.2340	.3685	.3539	.3809	.4284
.500	.3740	.3506	.3433	.3601	.3975
.950	.4093	.4979	.3668	.4514	.3481

NAAL 737 OA143 ORB/B65-NOSE GEAR RT SDWALL CPS (RFCN39) (14 MAY 75)

REFERENCE DATA

SREF = 2690.0000 SQ.FT. XMRP = 1076.7000 IN.XO
LREF = 474.8000 IN. YMRP = .0000 IN.YO
BREF = 936.6800 IN. ZMRP = 375.0000 IN.ZO
SCALE = .0405

PARAMETRIC DATA

BETA = 8.000 BDFLAP = -11.700
ELEVON = 5.000 RUDDER = .000
SPDBRK = 25.000 GRDPLN = .000
LNGRPS = 1.000 LNDGDR = 100.000

SECTION (1)NS GR RT SWAL CPS DEPENDENT VARIABLE CP

MACH (1) = .230 ALPHA (1) = .020

X/L	.050	.250	.500	.750	.950
X/LD					
.050	-.0948	-.0835	-.1065	-.0700	.0833
.500	-.0475	-.1121	-.1202	-.1162	-.0117
.950	-.0049	-.1233	-.1199	-.0888	-.0536

MACH (1) = .230 ALPHA (2) = 5.250

X/L	.050	.250	.500	.750	.950
X/LD					
.050	.0150	.0596	.0823	.0992	.2049
.500	.0849	.0544	.0442	.0544	.1619
.950	.1002	.0232	.0357	.0751	.0566

MACH (1) = .230 ALPHA (3) = 10.460

X/L	.050	.250	.500	.750	.950
X/LD					
.050	.1228	.1965	.2268	.2428	.3356
.500	.2098	.2011	.1945	.2095	.2972
.950	.2247	.1797	.2001	.2228	.1716

MACH (1) = .230 ALPHA (4) = 15.740

X/L	.050	.250	.500	.750	.950
X/LD					
.050	.2273	.3375	.3733	.3992	.4659
.500	.3440	.3470	.3362	.3514	.4333
.950	.3584	.3606	.3600	.3888	.2930

MACH (1) = .230 ALPHA (5) = 18.890

X/L	.050	.250	.500	.750	.950
X/LD					
.050	.2924	.4262	.4584	.4787	.5373
.500	.4322	.4341	.4256	.4312	.5045
.950	.4401	.4992	.4506	.5003	.3599

NAAL 737 OA143 ORB/867-NOSE GEAR RT SDWALL CPS (RFCN56) (14 MAY 75)

REFERENCE DATA

SREF =	2690.0000 SQ.FT.	XMRP =	1076.7000 IN.XO		
LREF =	474.8000 IN.	YMRP =	.0000 IN.YO		
BREF =	936.6800 IN.	ZMRP =	375.0000 IN.ZO		
SCALE =	.0405				

PARAMETRIC DATA

BETA =	.000	BDFLAP =	-11.700
ELEVON =	5.000	RUDDER =	.000
SPDBRK =	25.000	GRDPLN =	.000
LNGRPS =	1.000	LNDGDR =	100.000

SECTION (1)NS GR RT SWAL CPS DEPENDENT VARIABLE CP

MACH (1) = .230 ALPHA (1) = -4.160

X/L	.050	.250	.500	.750	.950
X/LD					
.050	-.1745	-.1622	-.2013	-.1729	-.0518
.500	-.1537	-.1975	-.2246	-.2238	-.1710
.950	-.1329	-.0712	-.2005	-.1453	-.0647

MACH (1) = .230 ALPHA (2) = -2.080

X/L	.050	.250	.500	.750	.950
X/LD					
.050	-.1367	-.1133	-.1488	-.1230	-.0031
.500	-.1042	-.1496	-.1690	-.1717	-.1158
.950	-.0831	.0277	-.1494	-.0870	-.0125

MACH (1) = .230 ALPHA (3) = .020

X/L	.050	.250	.500	.750	.950
X/LD					
.050	-.0938	-.0594	-.0953	-.0682	.0471
.500	-.0476	-.0905	-.1139	-.1171	-.0547
.950	-.0236	.1198	-.0894	-.0211	.0350

MACH (1) = .230 ALPHA (4) = 2.110

X/L	.050	.250	.500	.750	.950
X/LD					
.050	-.0491	-.0011	-.0390	-.0127	.1011
.500	.0090	-.0337	-.0573	-.0626	.0043
.950	.0356	.2133	-.0272	.0505	.0810

MACH (1) = .230 ALPHA (5) = 4.200

X/L	.050	.250	.500	.750	.950
X/LD					
.050	-.0093	.0533	.0158	.0461	.1511
.500	.0668	.0317	-.0009	-.0066	.0646
.950	.1010	.2747	.0287	.1110	.1281

MACH (1) = .230 ALPHA (6) = 6.290

X/L	.050	.250	.500	.750	.950
X/LD					
.050	.0320	.1123	.0746	.1014	.1960
.500	.1280	.0899	.0636	.0561	.1274
.950	.1642	.3462	.0840	.1708	.1797

MACH (1) = .230 ALPHA (7) = 8.400

X/L	.050	.250	.500	.750	.950
X/LD					
.050	.0768	.1627	.1327	.1578	.2416
.500	.1855	.1367	.1324	.1196	.1912
.950	.2186	.3865	.1453	.2437	.2365

NAAL 737 OA143 OR8/B67-NOSE GEAR RT SDWALL CPS (RFCN56)

SECTION (1)NS GR RT SWAL CPS DEPENDENT VARIABLE CP

MACH (1) = .230 ALPHA (8) = 10.490

X/L	.050	.250	.500	.750	.950
X/LD					
.050	.1222	.2202	.1957	.2136	.2910
.500	.2420	.1928	.2026	.1866	.2518
.950	.2757	.4174	.2064	.3239	.2884

MACH (1) = .230 ALPHA (9) = 12.590

X/L	.050	.250	.500	.750	.950
X/LD					
.050	.1709	.2783	.2631	.2786	.3443
.500	.2979	.2582	.2704	.2517	.3123
.950	.3280	.4669	.2738	.4074	.3315

MACH (1) = .230 ALPHA (10) = 14.700

X/L	.050	.250	.500	.750	.950
X/LD					
.050	.2163	.3379	.3263	.3386	.3958
.500	.3524	.3279	.3356	.3212	.3717
.950	.3847	.5219	.3370	.4805	.3680

MACH (1) = .230 ALPHA (11) = 16.800

X/L	.050	.250	.500	.750	.950
X/LD					
.050	.2608	.4014	.3868	.3988	.4512
.500	.4099	.3889	.3892	.3823	.4357
.950	.4414	.5736	.3986	.5549	.3980

MACH (1) = .230 ALPHA (12) = 18.910

X/L	.050	.250	.500	.750	.950
X/LD					
.050	.3013	.4549	.4455	.4506	.4953
.500	.4630	.4430	.4434	.4426	.4889
.950	.4912	.6183	.4639	.6143	.4181

NAAL 737 OA143 ORB/B67-NOSE GEAR RT SDWALL CPS (RFCN60) (14 MAY 75)

REFERENCE DATA

SREF = 2690.0000 SQ.FT. XMRP = 1076.7000 IN.XO
LREF = 474.8000 IN. YMRP = .0000 IN.YO
BREF = 936.6800 IN. ZMRP = 375.0000 IN.ZO
SCALE = .0405

PARAMETRIC DATA

BETA = 8.000 BDFLAP = -11.700
ELEVON = 5.000 RUDDER = .000
SPDBRK = 25.000 GRDPLN = .000
LNGRPS = 1.000 LNDGDR = 100.000

SECTION (1)NS GR RT SWAL CPS DEPENDENT VARIABLE CP

MACH (1) = .230 ALPHA (1) = -4.130

X/L	.050	.250	.500	.750	.950
X/LD					
.050	-.1705	-.1941	-.2133	-.1733	-.0023
.500	-.1540	-.2194	-.2232	-.2259	-.1319
.950	-.1123	-.2273	-.2296	-.2023	-.1507

MACH (1) = .230 ALPHA (2) = -2.050

X/L	.050	.250	.500	.750	.950
X/LD					
.050	-.1315	-.1419	-.1614	-.1241	.0422
.500	-.1059	-.1661	-.1759	-.1738	-.0715
.950	-.0590	-.1759	-.1781	-.1518	-.0946

MACH (1) = .230 ALPHA (3) = .020

X/L	.050	.250	.500	.750	.950
X/LD					
.050	-.0924	-.0841	-.1012	-.0706	.0845
.500	-.0498	-.1111	-.1184	-.1157	-.0093
.950	-.0036	-.1246	-.1227	-.0889	-.0539

MACH (1) = .230 ALPHA (4) = 2.120

X/L	.050	.250	.500	.750	.950
X/LD					
.050	-.0522	-.0244	-.0396	-.0093	.1273
.500	.0070	-.0475	-.0578	-.0487	.0502
.950	.0460	-.0700	-.0627	-.0251	-.0125

MACH (1) = .230 ALPHA (5) = 4.180

X/L	.050	.250	.500	.750	.950
X/LD					
.050	-.0107	.0214	.0350	.0605	.1756
.500	.0546	-.0041	.0089	.0170	.1245
.950	.0780	.0722	.0065	.0449	.0339

MACH (1) = .230 ALPHA (6) = 6.290

X/L	.050	.250	.500	.750	.950
X/LD					
.050	.0398	.0817	.1144	.1260	.2289
.500	.1106	.0572	.0727	.0821	.1873
.950	.1260	.1447	.0689	.1001	.0870

MACH (1) = .230 ALPHA (7) = 8.380

X/L	.050	.250	.500	.750	.950
X/LD					
.050	.0798	.1446	.1710	.1820	.2759
.500	.1575	.1196	.1332	.1437	.2369
.950	.1767	.2118	.1345	.1587	.1284

NAAL 737 OA143 ORB/B67-NOSE GEAR RT SDWALL CPS (RFCN60)

SECTION (1)NS GR RT SWAL CPS DEPENDENT VARIABLE CP

MACH (1) = .230 ALPHA (8) = 9.020

X/L	.050	.250	.500	.750	.950
X/LD					
.050	.2484	.3716	.4038	.4293	.4937
.500	.3778	.3798	.3589	.3789	.4577
.950	.3863	.4071	.3926	.4250	.3164

MACH (1) = .230 ALPHA (9) = 10.480

X/L	.050	.250	.500	.750	.950
X/LD					
.050	.1218	.1985	.2297	.2447	.3330
.500	.2083	.2012	.1933	.2072	.2958
.950	.2241	.1914	.2016	.2270	.1692

MACH (1) = .230 ALPHA (10) = 12.590

X/L	.050	.250	.500	.750	.950
X/LD					
.050	.1641	.2538	.2874	.3110	.3893
.500	.2600	.2592	.2505	.2587	.3548
.950	.2750	.2510	.2690	.2917	.2179

MACH (1) = .230 ALPHA (11) = 14.690

X/L	.050	.250	.500	.750	.950
X/LD					
.050	.2051	.3136	.3476	.3711	.4415
.500	.3182	.3187	.3098	.3248	.4070
.950	.3253	.3207	.3320	.3583	.2659

MACH (1) = .230 ALPHA (12) = 18.890

X/L	.050	.250	.500	.750	.950
X/LD					
.050	.2903	.4289	.4592	.4798	.5384
.500	.4290	.4354	.4268	.4321	.5026
.950	.4410	.4942	.4519	.4940	.3542

NAAL 737 OA143 ORB/B66- GR WELL RMS DYN PRESS (RFCC01) (25 FEB 76)

REFERENCE DATA

SREF = 2690.0000 SQ.FT. XMRP = 1076.7000 IN.XO
LREF = 474.8000 IN YMRP = .0000 IN.YO
BREF = 936.6800 IN. ZMRP = 375.0000 IN.ZO
SCALE = .0405

PARAMETRIC DATA

BETA = .000 BDFLAP = -11.700
ELEVON = 5.000 MACH = .200
SPDBRK = 25.000 GRDPLN = 1.000
LNGRPS = 1.000 LNDGDR = 100.000

Q(PSF)(1) = 60.247 ALPHA (1) = .010 BETA = .00000 RN/L = 1.4200

SECTION (1)GEAR DYN PRESS DEPENDENT VARIABLE CP-RMS

TAP	103.0000	107.0000	129.0000	135.0000	157.0000	203.0000	207.0000	229.0000	235.0000	257.0000	261.0000
D1	.000	.0265	.0253	.0233	.0231	.0512	.0238	.0258	.0779	.0232	.0507	.0908

Q(PSF)(1) = 60.529 ALPHA (2) = 5.380 BETA = .00000 RN/L = 1.4200

SECTION (1)GEAR DYN PRESS DEPENDENT VARIABLE CP-RMS

TAP	103.0000	107.0000	129.0000	135.0000	157.0000	203.0000	207.0000	229.0000	235.0000	257.0000	261.0000
D1	.000	.0293	.0289	.0281	.0281	.0540	.0179	.0252	.0635	.0256	.1367	.0705

Q(PSF)(1) = 60.710 ALPHA (3) = 10.710 BETA = .00000 RN/L = 1.4200

SECTION (1)GEAR DYN PRESS DEPENDENT VARIABLE CP-RMS

TAP	103.0000	107.0000	129.0000	135.0000	157.0000	203.0000	207.0000	229.0000	235.0000	257.0000	261.0000
D1	.000	.0322	.0316	.0319	.0320	.0491	.0261	.0319	.1039	.0545	.1257	.0963

Q(PSF)(1) = 61.211 ALPHA (4) = 16.140 BETA = .00000 RN/L = 1.4200

SECTION (1)GEAR DYN PRESS DEPENDENT VARIABLE CP-RMS

TAP	103.0000	107.0000	129.0000	135.0000	157.0000	203.0000	207.0000	229.0000	235.0000	257.0000	261.0000
D1	.000	.0258	.0253	.0243	.0268	.0373	.0248	.0277	.1026	.0426	.1004	.0914

NAAL 737 OA143 ORB/B66- GR WELL RMS DYN PRESS (RFCC01)

Q(PSF)(1) = 61.607 ALPHA (5) = 19.380 BETA = .00000 RN/L = 1.4200

SECTION (1)GEAR DYN PRESS DEPENDENT VARIABLE CP-RMS

TAP	103.0000	107.0000	129.0000	135.0000	157.0000	203.0000	207.0000	229.0000	235.0000	257.0000	261.0000
01	.000	.0246	.0240	.0224	.0252	.0356	.0277	.0283	.0995	.0362	.0945	.0894

NAAL 737 OA143 ORB/B66- GR WELL RMS DYN PRESS (RFCC02) (25 FEB 76)

REFERENCE DATA

SREF =	2690.0000 SQ.FT.	XMRP =	1076.7000 IN.XO		
LREF =	474.8000 IN	YMRP =	.0000 IN.YO		
BREF =	936.6800 IN.	ZMRP =	375.0000 IN.ZO		
SCALE =	.0405				

PARAMETRIC DATA

BETA =	-4.000	BDFLAP =	-11.700
ELEVON =	5.000	MACH =	.200
SPOBRK =	25.000	GRDPLN =	1.000
LNGRPS =	1.000	LNDGOR =	100.000

Q(PSF)(1) = 60.404 ALPHA (1) = .010 BETA = -4.0300 RN/L = 1.4200

SECTION (1)GEAR DYN PRESS DEPENDENT VARIABLE CP-RMS

TAP	103.0000	107.0000	129.0000	135.0000	157.0000	203.0000	207.0000	229.0000	235.0000	257.0000	261.0000
DI	.000	.0272	.0269	.0222	.0226	.0402	.0327	.0268	.0573	.0376	.1287	.2389

Q(PSF)(1) = 60.543 ALPHA (2) = 5.370 BETA = -4.0300 RN/L = 1.4200

SECTION (1)GEAR DYN PRESS DEPENDENT VARIABLE CP-RMS

TAP	103.0000	107.0000	129.0000	135.0000	157.0000	203.0000	207.0000	229.0000	235.0000	257.0000	261.0000
DI	.000	.0415	.0385	.0345	.0436	.0503	.0332	.0395	.1453	.0359	.1242	.1556

Q(PSF)(1) = 60.656 ALPHA (3) = 10.760 BETA = -4.0300 RN/L = 1.4200

SECTION (1)GEAR DYN PRESS DEPENDENT VARIABLE CP-RMS

TAP	103.0000	107.0000	129.0000	135.0000	157.0000	203.0000	207.0000	229.0000	235.0000	257.0000	261.0000
DI	.000	.0350	.0335	.0301	.0380	.0478	.0273	.0378	.1207	.0347	.1454	.1263

Q(PSF)(1) = 61.442 ALPHA (4) = 16.150 BETA = -4.0300 RN/L = 1.4200

SECTION (1)GEAR DYN PRESS DEPENDENT VARIABLE CP-RMS

TAP	103.0000	107.0000	129.0000	135.0000	157.0000	203.0000	207.0000	229.0000	235.0000	257.0000	261.0000
DI	.000	.0232	.0209	.0198	.0222	.0374	.0202	.0250	.0865	.0433	.0934	.0769

NAAL 737 OA143 ORB/B66- GR WELL RMS DYN PRESS (RFCC02)

Q(PSF)(1) = 61.536 ALPHA (5) = 19.360 BETA = -4.0300 RN/L = 1.4200

SECTION (1)GEAR DYN PRESS DEPENDENT VARIABLE CP-RMS

TAP	103.0000	107.0000	129.0000	135.0000	157.0000	203.0000	207.0000	229.0000	235.0000	257.0000	261.0000
D1	.000	.0297	.0275	.0241	.0284	.0412	.0229	.0281	.1086	.0395	.1119	.1178

NAAL 737 OA143 ORB/B66- OR WELL RMS DYN PRESS (RFCC03) (25 FEB 76)

REFERENCE DATA

SREF = 2690.0000 SQ.FT. XMRP = 1078.7000 IN.XO
LREF = 474.8000 IN YMRP = .0000 IN.YO
BREF = 936.6800 IN. ZMRP = 375.0000 IN.ZO
SCALE = .0405

PARAMETRIC DATA

BETA = -8.000 BOFLAP = -11.700
ELEVON = 5.000 MACH = .200
SPDBRK = 25.000 GRDPLN = 1.000
LNGRPS = 1.000 LNDGDR = 100.000

Q(PSF)(1) = 60.411 ALPHA (1) = .030 BETA = -8.0640 RN/L = 1.4200

SECTION (1)GEAR DYN PRESS DEFENDENT VARIABLE CP-RMS

TAP 103.0000107.0000129.0000135.0000157.0000203.0000207.0000229.0000235.0000257.0000261.0000

D1
.000 .0294 .0243 .0212 .0364 .0420 .0591 .0414 .1200 .1080 .0998 .2386

Q(PSF)(1) = 60.602 ALPHA (2) = 5.380 BETA = -8.0640 RN/L = 1.4200

SECTION (1)GEAR DYN PRESS DEPENDENT VARIABLE CP-RMS

TAP 103.0000107.0000129.0000135.0000157.0000203.0000207.0000229.0000235.0000257.0000261.0000

D1
.000 .0388 .0327 .0286 .0342 .0455 .0297 .0328 .1215 .0850 .1000 .1603

Q(PSF)(1) = 60.883 ALPHA (3) = 10.760 BETA = -8.0640 RN/L = 1.4200

SECTION (1)GEAR DYN PRESS DEPENDENT VARIABLE CP-RMS

TAP 103.0000107.0000129.0000135.0000157.0000203.0000207.0000229.0000235.0000257.0000261.0000

D1
.000 .0375 .0307 .0277 .0316 .0441 .0231 .0314 .1126 .0785 .1082 .1174

Q(PSF)(1) = 60.938 ALPHA (4) = 16.170 BETA = -8.0640 RN/L = 1.4200

SECTION (1)GEAR DYN PRESS DEPENDENT VARIABLE CP-RMS

TAP 103.0000107.0000129.0000135.0000157.0000203.0000207.0000229.0000235.0000257.0000261.0000

D1
.000 .0328 .0301 .0277 .0318 .0433 .0251 .0351 .1123 .0788 .1146 .1166

NAAL 737 OA143 ORB/B66- GR WELL RMS DYN PRESS (RFCC03)

Q(PSF)(1) = 61.324 ALPHA (5) = 19.400 BETA = -8.0640 RN/L = 1.4200

SECTION (1)GEAR DYN PRESS DEPENDENT VARIABLE CP-RMS

TAP	103.0000	107.0000	129.0000	135.0000	157.0000	203.0000	207.0000	229.0000	235.0000	257.0000	261.0000
DI	.000	.0365	.0346	.0314	.0365	.0464	.0289	.0366	.1341	.0989	.1176	.1366

NAAL 737 OA143 ORB/B66- GR WELL RMS DYN PRESS (RFCC04) (25 FEB 76)

REFERENCE DATA

SREF = 2690.0000 SQ.FT. XMRP = 1076.7000 IN.XO
LREF = 474.8000 IN YMRP = .0000 IN.YO
BREF = 936.6800 IN. ZMRP = 375.0000 IN.ZO
SCALE = .0405

PARAMETRIC DATA

BETA = 4.000 BDFLAP = -11.700
ELEVON = 5.000 MACH = .200
SPDBRK = 25.000 GRDPLN = 1.000
LNGRPS = 1.000 LNDGDR = 100.000

Q(PSF)(1) = 60.494 ALPHA (1) = .000 BETA = 4.0440 RN/L = 1.4200

SECTION (1)GEAR DYN PRESS DEPENDENT VARIABLE CP-RMS

TAP 103.0000107.0000129.0000135.0000157.0000203.0000207.0000229.0000235.0000257.0000261.0000

D1
.000 .0251 .0262 .0282 .0241 .0519 .0223 .0334 .1018 .0287 .1057 .0663

Q(PSF)(1) = 60.470 ALPHA (2) = 5.340 BETA = 4.0440 RN/L = 1.4200

SECTION (1)GEAR DYN PRESS DEPENDENT VARIABLE CP-RMS

TAP 103.0000107.0000129.0000135.0000157.0000203.0000207.0000229.0000235.0000257.0000261.0000

D1
.000 .0364 .0364 .0385 .0359 .0582 .0336 .0407 .1332 .0544 .1391 .1361

Q(PSF)(1) = 60.738 ALPHA (3) = 10.730 BETA = 4.0440 RN/L = 1.4200

SECTION (1)GEAR DYN PRESS DEPENDENT VARIABLE CP-RMS

TAP 103.0000107.0000129.0000135.0000157.0000203.0000207.0000229.0000235.0000257.0000261.0000

D1
.000 .0301 .0312 .0345 .0299 .0572 .0278 .0313 .1134 .0493 .1123 .1015

Q(PSF)(1) = 61.104 ALPHA (4) = 16.140 BETA = 4.0440 RN/L = 1.4200

SECTION (1)GEAR DYN PRESS DEPENDENT VARIABLE CP-RMS

TAP 103.0000107.0000129.0000135.0000157.0000203.0000207.0000229.0000235.0000257.0000261.0000

D1
.000 .0330 .0330 .0289 .0328 .0554 .0324 .0362 .1264 .0380 .1158 .1238

NAAL 737 OA143 ORB/B66- GR WELL RMS DYN PRESS (RFCC04)

Q(PSF)(1) = 61.530 ALPHA (5) = 19.370 BETA = 4.0440 RN/L = 1.4200

SECTION (1)GEAR DYN PRESS DEPENDENT VARIABLE CP-RMS

TAP	103.0000	107.0000	129.0000	135.0000	157.0000	203.0000	207.0000	229.0000	235.0000	257.0000	261.0000
D1	.000	.0258	.0272	.0233	.0259	.0613	.0321	.0313	.0939	.0303	.0905	.0919

NAAL 737 OA143 ORB/B66- GR WELL RMS DYN PRESS (RFCC05) (25 FEB 76)

REFERENCE DATA

SREF = 2690.0000 SQ.FT. XMRP = 1076.7000 IN.XO
LREF = 474.8000 IN YMRP = .0000 IN.YO
BREF = 936.6800 IN. ZMRP = 375.0000 IN.ZO
SCALE = .0405

PARAMETRIC DATA

BETA = 8.000 BOFLAP = -11.700
ELEVON = 5.000 MACH = .200
SPDBRK = 25.000 GRDPLN = 1.000
LNGRPS = 1.000 LNDGDR = 100.000

Q(PSF)(1) = 60.622 ALPHA (1) = .030 BETA = 8.0580 RN/L = 1.4200

SECTION (1)GEAR DYN PRESS DEPENDENT VARIABLE CP-RMS

TAP 103.0000107.0000129.0000135.0000157.0000203.0000207.0000229.0000235.0000257.0000261.0000

DI
.000 .0244 .0297 .0366 .0230 .0813 0354 .0289 .0544 .0299 .1121 .0474

Q(PSF)(1) = 60.507 ALPHA (2) = 5.360 BETA = 8.0580 RN/L = 1.4200

SECTION (1)GEAR DYN PRESS DEPENDENT VARIABLE CP-RMS

TAP 103.0000107.0000129.0000135.0000157.0000203.0000207.0000229.0000235.0000257.0000261.0000

DI
.000 .0319 .0384 .0293 .0311 .0891 .0422 .0372 .1310 .0622 .1437 .0752

Q(PSF)(1) = 60.862 ALPHA (3) = 10.770 BETA = 8.0580 RN/L = 1.4200

SECTION (1)GEAR DYN PRESS DEPENDENT VARIABLE CP-RMS

TAP 103.0000107.0000129.0000135.0000157.0000203.0000207.0000229.0000235.0000257.0000261.0000

DI
.000 .0283 .0334 .0264 .0277 .0885 .0360 .0333 .1189 .0500 .1318 .0655

Q(PSF)(1) = 61.093 ALPHA (4) = 16.160 BETA = 8.0580 RN/L = 1.4200

SECTION (1)GEAR DYN PRESS DEPENDENT VARIABLE CP-RMS

TAP 103.0000107.0000129.0000135.0000157.0000203.0000207.0000229.0000235.0000257.0000261.0000

DI
.000 .0199 .0226 .0230 .0212 .0822 .0429 .0309 .0635 .0324 .0911 .0457

NAAL 737 OA143 ORB/B66- OR WELL RMS DYN PRESS (RFCC05)

Q(PSF)(1) = 61.352 ALPHA (5) = 19 390 BETA = 8.0580 RN/L = 1.4200

SECTION (1)GEAR DYN PRESS DEPENDENT VARIABLE CP-RMS

TAP	103.0000	107.0000	129.0000	135.0000	157.0000	203.0000	207.0000	229.0000	235.0000	257.0000	261.0000
DI	.000	.0299	.0308	.0273	.0302	.0753	.0362	.0377	.1080	.0329	.1019	.0483

NAAL 737 OA143 ORB/B66- GR WELL RMS DYN PRESS (RFCC06) (25 FEB 76)

REFERENCE DATA

SREF = 2690.0000 SQ.FT. XMRP = 1076.7000 IN.XO
LREF = 474.8000 IN YMRP = .0000 IN.YO
BREF = 936.6800 IN. ZMRP = 375.0000 IN.ZO
SCALE = .0405

PARAMETRIC DATA

BETA = .000 BDFLAP = -11.700
ELEVON = 10.000 MACH = .200
SPDBRK = 25.000 GRDPLN = 1.000
LNGRPS = 1.000 LNDGDR = 100.000

Q(PSF)(1) = 60.087 ALPHA (1) = .110 BETA = .40000-02 RN/L = 1.4200

SECTION (1)GEAR DYN PRESS DEPENDENT VARIABLE CP-RMS

TAP 103.0000107.0000129.0000135.0000157.0000203.0000207.0000229.0000235.0000257.0000261.0000

D1
.000 .0404 .0254 .0230 .0231 .0473 .0220 .0217 .0454 .0198 .0510 .0842

Q(PSF)(1) = 60.247 ALPHA (2) = 5.470 BETA = .40000-02 RN/L = 1.4200

SECTION (1)GEAR DYN PRESS DEPENDENT VARIABLE CP-RMS

TAP 103.0000107.0000129.0000135.0000157.0000203.0000207.0000229.0000235.0000257.0000261.0000

D1
.000 .0454 .0325 .0304 .0330 .0529 .0216 .0306 .0952 .0289 .1427 .1007

Q(PSF)(1) = 61.027 ALPHA (3) = 10.840 BETA = .40000-02 RN/L = 1.4200

SECTION (1)GEAR DYN PRESS DEPENDENT VARIABLE CP-RMS

TAP 103.0000107.0000129.0000135.0000157.0000203.0000207.0000229.0000235.0000257.0000261.0000

D1
.000 .0426 .0277 .0303 .0288 .0429 .0231 .0290 .0858 .0511 .1168 .0715

Q(PSF)(1) = 61.097 ALPHA (4) = 16.230 BETA = .40000-02 RN/L = 1.4200

SECTION (1)GEAR DYN PRESS DEPENDENT VARIABLE CP-RMS

TAP 103.0000107.0000129.0000135.0000157.0000203.0000207.0000229.0000235.0000257.0000261.0000

D1
.000 .0417 .0288 .0266 .0305 .0392 .0267 .0353 .1129 .0433 .1079 .1080

NAAL 737 OA143 ORB/B66- GR WELL RMS DYN PRESS (RFCC08)

Q(PSF)(1) = 61.123 ALPHA (5) = 19.450 BETA = .40000-02 RN/L = 1.4200

SECTION (1)GEAR DYN PRESS DEPENDENT VARIABLE CP-RMS

TAP	103.0000	107.0000	129.0000	135.0000	157.0000	203.0000	207.0000	229.0000	235.0000	257.0000	281.0000	
D1	.000	.0353	.0193	.0195	.0202	.0332	.0247	.0277	.0800	.0338	.0808	.0647

NAAL 737 OA143 ORB/B66- GR WELL RMS DYN PRESS (RFCC07) (25 FEB 76)

REFERENCE DATA

SREF = 2690.0000 SQ.FT. XMRP = 1076.7000 IN.XO
LREF = 474.8000 IN YMRP = .0000 IN.YO
BREF = 936.6800 IN. ZMRP = 375.0000 IN.ZO
SCALE = .0405

PARAMETRIC DATA

BETA = -4.000 BDFLAP = -11.700
ELEVON = 10.000 MACH = .200
SPDBRK = 25.000 GROPLN = 1.000
LNGRPS = 1.000 LNDGDR = 100.000

Q(PSF)(1) = 60.528 ALPHA (1) = .130 BETA = -4.0540 RN/L = 1.4200

SECTION (1)GEAR DYN PRESS DEPENDENT VARIABLE CP-RMS

TAP 103.0000107.0000129.0000135.0000157.0000203.0000207.0000229.0000235.0000257.0000261.0000

DI
.000 .0394 .0238 .0216 .0247 .0413 .0315 .0290 .0470 .0337 .0762 .1991

Q(PSF)(1) = 60.632 ALPHA (2) = 5.470 BETA = -4.0540 RN/L = 1.4200

SECTION (1)GEAR DYN PRESS DEPENDENT VARIABLE CP-RMS

TAP 103.0000107.0000129.0000135.0000157.0000203.0000207.0000229.0000235.0000257.0000261.0000

DI
.000 .0448 .0318 .0277 .0369 .0459 .0261 .0324 .0363 .0269 .1030 .1249

Q(PSF)(1) = 60.546 ALPHA (3) = 10.870 BETA = -4.0540 RN/L = 1.4200

SECTION (1)GEAR DYN PRESS DEPENDENT VARIABLE CP-RMS

TAP 103.0000107.0000129.0000135.0000157.0000203.0000207.0000229.0000235.0000257.0000261.0000

DI
.000 .0392 .0241 .0226 .0299 .0411 .0203 .0314 .0288 .0286 .1306 .0816

Q(PSF)(1) = 61.061 ALPHA (4) = 16.240 BETA = -4.0540 RN/L = 1.4200

SECTION (1)GEAR DYN PRESS DEPENDENT VARIABLE CP-RMS

TAP 103.0000107.0000129.0000135.0000157.0000203.0000207.0000229.0000235.0000257.0000261.0000

DI
.000 .0470 .0348 .0307 .0360 .0452 .0297 .0420 .0700 .0492 .1234 .1377

NAAL 737 OA143 ORB/B66- GR WELL RMS DYN PRESS (RFCC07)

Q(PSF)(1) = 61.487 ALPHA (5) = 19.450 BETA = -4.0540 RN/L = 1.4200

SECTION (1)GEAR DYN PRESS DEPENDENT VARIABLE CP-RMS

TAP	103.0000	107.0000	129.0000	135.0000	157.0000	203.0000	207.0000	229.0000	235.0000	257.0000	261.0000
DI	.000	.0458	.0341	.0301	.0355	.0457	.0286	.0363	.0643	.0431	.1168	.1355

NAAL 737 OA143 ORB/B66- GR WELL RMS DYN PRESS (RFCC08) (25 FEB 76)

REFERENCE DATA

SREF =	2690.0000 SQ.FT.	XMRP =	1076.7000 IN.XO		
LREF =	474.8000 IN	YMRP =	.0000 IN.YO		
BREF =	936.6800 IN.	ZMRP =	375.0000 IN.ZO		
SCALE =	.0405				

PARAMETRIC DATA

BETA =	-8.000	BOFLAP =	-11.700
ELEVON =	10.000	MACH =	.200
SPDBRK =	25.000	GRDPLN =	1.000
LNGRPS =	1.000	LNDGDR =	100.000

Q(PSF)(1) = 60.404 ALPHA (1) = .120 BETA = -8.0780 RN/L = 1.4200

SECTION (1)GEAR DYN PRESS DEPENDENT VARIABLE CP-RMS

TAP	103.0000	107.0000	129.0000	135.0000	157.0000	203.0000	207.0000	229.0000	235.0000	257.0000	261.0000
DI	.000	.0406	.0210	.0192	.0346	.0408	.0613	.0447	.1214	.1082	.0922	.2303

Q(PSF)(1) = 60.608 ALPHA (2) = 5.490 BETA = -8.0780 RN/L = 1.4200

SECTION (1)GEAR DYN PRESS DEPENDENT VARIABLE CP-RMS

TAP	103.0000	107.0000	129.0000	135.0000	157.0000	203.0000	207.0000	229.0000	235.0000	257.0000	261.0000
DI	.000	.0487	.0310	.0276	.0323	.0449	.0275	.0317	.1109	.0769	.0921	.1461

Q(PSF)(1) = 60.902 ALPHA (3) = 10.870 BETA = -8.0780 RN/L = 1.4200

SECTION (1)GEAR DYN PRESS DEPENDENT VARIABLE CP-RMS

TAP	103.0000	107.0000	129.0000	135.0000	157.0000	203.0000	207.0000	229.0000	235.0000	257.0000	261.0000
DI	.000	.0479	.0322	.0287	.0329	.0442	.0245	.0334	.1193	.0858	.1130	.1249

Q(PSF)(1) = 61.086 ALPHA (4) = 16.230 BETA = -8.0780 RN/L = 1.4200

SECTION (1)GEAR DYN PRESS DEPENDENT VARIABLE CP-RMS

TAP	103.0000	107.0000	129.0000	135.0000	157.0000	203.0000	207.0000	229.0000	235.0000	257.0000	261.0000
DI	.000	.0452	.0308	.0284	.0327	.0442	.0258	.0403	.1144	.0826	.1164	.1194

NAAL 737 OA143 ORB/B66- GR WELL RMS DYN PRESS (RFCC08)

Q(PSF)(1) = 61.122 ALPHA (5) = 19.440 BETA = -8.0780 RN/L = 1.4200

SECTION (1)GEAR DYN PRESS DEPENDENT VARIABLE CP-RMS

TAP	103.0000	107.0000	129.0000	135.0000	157.0000	203.0000	207.0000	229.0000	235.0000	257.0000	261.0000
D1	.000	.0409	.0263	.0241	.0282	.0406	.0211	.0282	.0968	.0651	.0921	.0980

NAAL 737 OA143 ORB/866- GR WELL RMS DYN PRESS (RFCC09) (25 FEB 78)

REFERENCE DATA

SREF = 2690.0000 SQ.FT. XMRP = 1076.7000 IN.XO
LREF = 474.8000 IN YMRP = .0000 IN.YO
BREF = 936.6800 IN. ZMRP = 375.0000 IN.ZO
SCALE = .0405

PARAMETRIC DATA

BETA = 4.000 BDFLAP = -11.700
ELEVON = 10.000 MACH = .200
SPDBRK = 25.000 GRDPLN = 1.000
LNGRPS = 1.000 LNDGDR = 100.000

Q(PSF)(1) = 60.483 ALPHA (1) = .110 BETA = 4.0160 RN/L = 1.4200

SECTION (1)GEAR DYN PRESS DEPENDENT VARIABLE CP-RMS

TAP 103.0000107.0000129.0000135.0000157.0000203.0000207.0000229.0000235.0000257.0000261.0000

DI
.000 .0404 .0269 .0286 .0251 .0506 .0212 .0271 .0605 .0226 .1107 .0688

Q(PSF)(1) = 60.569 ALPHA (2) = 5.450 BETA = 4.0160 RN/L = 1.4200

SECTION (1)GEAR DYN PRESS DEPENDENT VARIABLE CP-RMS

TAP 103.0000107.0000129.0000135.0000157.0000203.0000207.0000229.0000235.0000257.0000261.0000

DI
.000 .0482 .0378 .0395 .0375 .0583 .0339 .0409 .1384 .0532 .1385 .1398

Q(PSF)(1) = 60.984 ALPHA (3) = 10.830 BETA = 4.0160 RN/L = 1.4200

SECTION (1)GEAR DYN PRESS DEPENDENT VARIABLE CP-RMS

TAP 103.0000107.0000129.0000135.0000157.0000203.0000207.0000229.0000235.0000257.0000261.0000

DI
.000 .0408 .0278 .0322 .0267 .0548 .0260 .0303 .0984 .0457 .1050 .0817

Q(PSF)(1) = 61.037 ALPHA (4) = 16.230 BETA = 4.0160 RN/L = 1.4200

SECTION (1)GEAR DYN PRESS DEPENDENT VARIABLE CP-RMS

TAP 103.0000107.0000129.0000135.0000157.0000203.0000207.0000229.0000235.0000257.0000261.0000

DI
.000 .0407 .0288 .0252 .0286 .0527 .0298 .0351 .1076 .0338 .1015 .1031

NAAL 737 OA143 ORB/B66- GR WELL RMS DYN PRESS (RFCC09)

Q(PSF)(1) = 61.234 ALPHA (5) = 19 440 BETA = 4.0160 RN/L = 1.4200

SECTION (1)GEAR DYN PRESS DEPENDENT VARIABLE CP-RMS

TAP	103.0000	107.0000	129.0000	135.0000	157.0000	203.0000	207.0000	229.0000	235.0000	257.0000	261.0000
D1	.000	.0375	.0248	.0219	.0238	.0591	.0300	.0291	.0831	.0283	.0827	.0786

NAAL 737 OA143 ORB/B66- GR WELL RMS DYN PRESS (RFCC10) (25 FEB 76)

REFERENCE DATA

SREF = 2690.0000 SQ.FT. XMRP = 1076.7000 IN.XO
LREF = 474.8000 IN YMRP = .0000 IN.YO
BREF = 936.6800 IN. ZMRP = 375.0000 IN.ZO
SCALE = .0405

PARAMETRIC DATA

BETA = 8.000 BDFLAP = -11.700
ELEVON = 10.000 MACH = .200
SPDBRK = 25.000 GRDPLN = 1.000
LNGRPS = 1.000 LNDGDR = 100.000

Q(PSF)(1) = 60.307 ALPHA (1) = .110 BETA = 8.0580 RN/L = 1.4200

SECTION (1)GEAR DYN PRESS DEPENDENT VARIABLE CP-RMS

TAP 103.0000107.0000129.0000135.0000157.0000203.0000207.0000229.0000235.0000257.0000261.0000

D1
.000 .0382 .0303 .0359 .0327 .1206 .0280 .0301 .0639 .0298 .1311 .1191

Q(PSF)(1) = 60.428 ALPHA (2) = 5.430 BETA = 8.0580 RN/L = 1.4200

SECTION (1)GEAR DYN PRESS DEPENDENT VARIABLE CP-RMS

TAP 103.0000107.0000129.0000135.0000157.0000203.0000207.0000229.0000235.0000257.0000261.0000

D1
.000 .0462 .0409 .0328 .0354 .1541 .0354 .0419 .1428 .0623 .1478 .1325

Q(PSF)(1) = 60.600 ALPHA (3) = 10.830 BETA = 8.0580 RN/L = 1.4200

SECTION (1)GEAR DYN PRESS DEPENDENT VARIABLE CP-RMS

TAP 103.0000107.0000129.0000135.0000157.0000203.0000207.0000229.0000235.0000257.0000261.0000

D1
.000 .0432 .0368 .0295 .0323 .1382 .0290 .0392 .1315 .0492 .1348 .1184

Q(PSF)(1) = 61.183 ALPHA (4) = 16.230 BETA = 8.0580 RN/L = 1.4200

SECTION (1)GEAR DYN PRESS DEPENDENT VARIABLE CP-RMS

TAP 103.0000107.0000129.0000135.0000157.0000203.0000207.0000229.0000235.0000257.0000261.0000

D1
.000 .0424 .0321 .0283 .0308 .1257 .0371 .0404 .1093 .0363 .1071 .1076

NAAL 737 OA143 ORB/B66- GR WELL RMS DYN PRESS (RFCC10)

Q(PSF)(1) = 61.298 ALPHA (5) = 19.430 BETA = 8.0580 RN/L = 1.4200

SECTION (1)GEAR DYN PRESS DEPENDENT VARIABLE CP-RMS

TAP	103.0000	107.0000	129.0000	135.0000	157.0000	203.0000	207.0000	229.0000	235.0000	257.0000	261.0000
D1	.000	.0384	.0267	.0244	.0261	.1058	.0304	.0330	.0879	.0291	.0867	.0884

NAAL 737 OA143 ORB/866- GR WELL RMS DYN PRESS (RFCC11) (25 FEB 76)

REFERENCE DATA

SREF = 2690.0000 SQ.FT. XMRP = 1076.7000 IN.XO
LREF = 474.8000 IN YMRP = .0000 IN.YO
BREF = 936.6800 IN. ZMRP = 375.0000 IN.ZO
SCALE = .0405

PARAMETRIC DATA

BETA = .000 BDFLAP = -11.700
ELEVON = 15.000 MACH = .200
SPDBRK = 25.000 GRDPLN = 1.000
LNGRPS = 1.000 LNDGDR = 100.000

Q(PSF)(1) = 60.240 ALPHA (1) = .190 BETA = -.40000-02 RN/L = 1.4200

SECTION (1)GEAR DYN PRESS DEPENDENT VARIABLE CP-RMS

TAP 103.0000107.0000129.0000135.0000157.0000203.0000207.0000229.0000235.0000257.0000261.0000

D1
.000 .0400 .0254 .0231 .0236 .0491 .0209 .0221 .0397 .0190 .0500 .0777

Q(PSF)(1) = 60.343 ALPHA (2) = 5.560 BETA = -.40000-02 RN/L = 1.4200

SECTION (1)GEAR DYN PRESS DEPENDENT VARIABLE CP-RMS

TAP 103.0000107.0000129.0000135.0000157.0000203.0000207.0000229.0000235.0000257.0000261.0000

D1
.000 .0499 .0383 .0346 .0399 .0601 .0285 .0398 .1300 .0360 .1510 .1359

Q(PSF)(1) = 60.599 ALPHA (3) = 10.920 BETA = -.40000-02 RN/L = 1.4200

SECTION (1)GEAR DYN PRESS DEPENDENT VARIABLE CP-RMS

TAP 103.0000107.0000129.0000135.0000157.0000203.0000207.0000229.0000235.0000257.0000261.0000

D1
.000 .0470 .0343 .0340 .0359 .0510 .0275 .0363 .1166 .0520 .1234 .1112

Q(PSF)(1) = 61.188 ALPHA (4) = 16.300 BETA = -.40000-02 RN/L = 1.4200

SECTION (1)GEAR DYN PRESS DEPENDENT VARIABLE CP-RMS

TAP 103.0000107.0000129.0000135.0000157.0000203.0000207.0000229.0000235.0000257.0000261.0000

D1
.000 .0396 .0262 .0246 .0279 .0396 .0249 .0323 .0997 .0410 .0997 .0935

NAAL 737 OA143 ORB/B66- GR WELL RMS DYN PRESS (RFCC11)

Q(PSF)(1) = 61.684 ALPHA (5) = 19.510 BETA = -.40000-02 RN/L = 1.4200

SECTION (1)GEAR DYN PRESS DEPENDENT VARIABLE CP-RMS

TAP	103.0000	107.0000	129.0000	135.0000	157.0000	203.0000	207.0000	229.0000	235.0000	257.0000	261.0000
DI	.000	.0362	.0207	.0197	.0220	.0350	.0260	.0263	.0849	.0322	.0823	.0727

NAAL 737 OA143 ORB/B66- GR WELL RMS DYN PRESS (RFCC12) (25 FEB 76)

REFERENCE DATA

SREF = 2690.0000 SQ.FT. XMRP = 1076.7000 IN.XO
LREF = 474.8000 IN YMRP = .0000 IN.YO
BREF = 936.6800 IN. ZMRP = 375.0000 IN.ZO
SCALE = .0405

PARAMETRIC DATA

BETA = -4.000 BDFLAP = -11.700
ELEVON = 15.000 MACH = .200
SPDBRK = 25.000 GRDPLN = 1.000
LNGRPS = 1.000 LNDGDR = 100.000

Q(PSF)(1) = 60.319 ALPHA (1) = .200 BETA = -4.0600 RN/L = 1.4200

SECTION (1)GEAR DYN PRESS DEPENDENT VARIABLE CP-RMS

TAP 103.0000107.0000129.0000135.0000157.0000203.0000207.0000229.0000235.0000257.0000261.0000

D1
.000 .0384 .0220 .0209 .0236 .0415 .0308 .0288 .0447 .0287 .0679 .1718

Q(PSF)(1) = 60.392 ALPHA (2) = 5.570 BETA = -4.0600 RN/L = 1.4200

SECTION (1)GEAR DYN PRESS DEPENDENT VARIABLE CP-RMS

TAP 103.0000107.0000129.0000135.0000157.0000203.0000207.0000229.0000235.0000257.0000261.0000

D1
.000 .0439 .0298 .0262 .0362 .0484 .0237 .0312 .0334 .0250 .0972 .1138

Q(PSF)(1) = 60.712 ALPHA (3) = 10.970 BETA = -4.0600 RN/L = 1.4200

SECTION (1)GEAR DYN PRESS DEPENDENT VARIABLE CP-RMS

TAP 103.0000107.0000129.0000135.0000157.0000203.0000207.0000229.0000235.0000257.0000261.0000

D1
.000 .0394 .0244 .0232 .0304 .0436 .0209 .0357 .0315 .0293 .1304 .0831

Q(PSF)(1) = 60.864 ALPHA (4) = 16.300 BETA = -4.0600 RN/L = 1.4200

SECTION (1)GEAR DYN PRESS DEPENDENT VARIABLE CP-RMS

TAP 103.0000107.0000129.0000135.0000157.0000203.0000207.0000229.0000235.0000257.0000261.0000

D1
.000 .0411 .0277 .0239 .0289 .0433 .0236 .0357 .0670 .0433 .1036 .1055

NAAL 737 OA143 ORB/B66- GR WELL RMS DYN PRESS (RFCC12)

Q(PSF)(1) = 61.318 ALPHA (5) = 19.500 BETA = -4.0600 RN/L = 1.4200

SECTION (1)GEAR DYN PRESS DEPENDENT VARIABLE CP-RMS

TAP	103.0000	107.0000	129.0000	135.0000	157.0000	203.0000	207.0000	229.0000	235.0000	257.0000	261.0000
DI	.000	.0450	.0319	.0278	.0340	.0487	.0268	.0344	.0637	.0399	.1094	.1252

NAAL 737 OA143 ORB/B66- GR WELL RMS DYN PRESS (RFCC13) (25 FEB 76)

REFERENCE DATA

SREF =	2690.0000 SQ.FT.	XMRP =	1076.7000 IN.XO		
LREF =	474.8000 IN	YMRP =	.0000 IN.YO		
BREF =	936.6800 IN.	ZMRP =	375.0000 IN.ZO		
SCALE =	.0405				

PARAMETRIC DATA

BETA =	-8.000	BDFLAP =	-11.700
ELEVON =	15.000	MACH =	.200
SPDBRK =	25.000	GRDPLN =	1.000
LNGRPS =	1.000	LNDGDR =	100.000

Q(PSF)(1) = 60.531 ALPHA (1) = .210 BETA = -8.0820 RN/L = 1.4200

SECTION (1)GEAR DYN PRESS DEPENDENT VARIABLE CP-RMS

TAP	103.0000	107.0000	129.0000	135.0000	157.0000	203.0000	207.0000	229.0000	235.0000	257.0000	261.0000
DI	.000	.0410	.0213	.0194	.0354	.0415	.0367	.0364	.0613	.0544	.0783	.2492

Q(PSF)(1) = 60.456 ALPHA (2) = 5.590 BETA = -8.0820 RN/L = 1.4200

SECTION (1)GEAR DYN PRESS DEPENDENT VARIABLE CP-RMS

TAP	103.0000	107.0000	129.0000	135.0000	157.0000	203.0000	207.0000	229.0000	235.0000	257.0000	261.0000
DI	.000	.0466	.0284	.0250	.0300	.0463	.0243	.0296	.0423	.0244	.0803	.1290

Q(PSF)(1) = 60.847 ALPHA (3) = 10.970 BETA = -8.0820 RN/L = 1.4200

SECTION (1)GEAR DYN PRESS DEPENDENT VARIABLE CP-RMS

TAP	103.0000	107.0000	129.0000	135.0000	157.0000	203.0000	207.0000	229.0000	235.0000	257.0000	261.0000
DI	.000	.0443	.0245	.0226	.0250	.0417	.0169	.0269	.0248	.0201	.0950	.0811

Q(PSF)(1) = 60.926 ALPHA (4) = 16.340 BETA = -8.0820 RN/L = 1.4200

SECTION (1)GEAR DYN PRESS DEPENDENT VARIABLE CP-RMS

TAP	103.0000	107.0000	129.0000	135.0000	157.0000	203.0000	207.0000	229.0000	235.0000	257.0000	261.0000
DI	.000	.0380	.0203	.0210	.0232	.0383	.0181	.0373	.0450	.0343	.0899	.0687

NAAL 737 OA143 ORB/B66- GR WELL RMS DYN PRESS (RFCC13)

Q(PSF)(1) = 51.244 ALPHA (5) = 19.520 BETA = -8.0820 RN/L = 1.4200

SECTION (1)GEAR DYN PRESS DEPENDENT VARIABLE CP-RMS

TAP	103.0000	107.0000	129.0000	135.0000	157.0000	203.0000	207.0000	229.0000	235.0000	257.0000	281.0000
DI	.000	.0387	.0234	.0221	.0259	.0404	.0190	.0305	.0519	.0336	.0811	.0841

NAAL 737 OA143 ORB/B66- GR WELL RMS DYN PRESS (RFCC14) (25 FEB 76)

REFERENCE DATA

SREF = 2690.0000 SQ.FT. XMRP = 1076.7000 IN.XO
LREF = 474.8000 IN YMRP = .0000 IN.YO
BREF = 936.6800 IN. ZMRP = 375.0000 IN.ZO
SCALE = .0405

PARAMETRIC DATA

BETA = 4.000 BDFLAP = -11.700
ELEVON = 15.000 MACH = .200
SPDBRK = 25.000 GRDPLN = 1.000
LNGRPS = 1.000 LNDGDR = 100.000

Q(PSF)(1) = 60.290 ALPHA (1) = .170 BETA = 4.0040 RN/L = 1.4200

SECTION (1)GEAR DYN PRESS DEPENDENT VARIABLE CP-RMS

TAP 103.0000107.0000129.0000135.0000157.0000203.0000207.0000229.0000235.0000257.0000261.0000

DI
.000 .0386 .0238 .0264 .0221 .0514 .0198 .0318 .0216 .0233 .1102 .0439

Q(PSF)(1) = 60.460 ALPHA (2) = 5.550 BETA = 4.0040 RN/L = 1.4200

SECTION (1)GEAR DYN PRESS DEPENDENT VARIABLE CP-RMS

TAP 103.0000107.0000129.0000135.0000157.0000203.0000207.0000229.0000235.0000257.0000261.0000

DI
.000 .0407 .0295 .0331 .0285 .0576 .0264 .0381 .1008 .0484 .1140 .0614

Q(PSF)(1) = 60.584 ALPHA (3) = 10.910 BETA = 4.0040 RN/L = 1.4200

SECTION (1)GEAR DYN PRESS DEPENDENT VARIABLE CP-RMS

TAP 103.0000107.0000129.0000135.0000157.0000203.0000207.0000229.0000235.0000257.0000261.0000

DI
.000 .0421 .0306 .0344 .0310 .0589 .0279 .0427 .1076 .0454 .1087 .0575

Q(PSF)(1) = 61.261 ALPHA (4) = 16.300 BETA = 4.0040 RN/L = 1.4200

SECTION (1)GEAR DYN PRESS DEPENDENT VARIABLE CP-RMS

TAP 103.0000107.0000129.0000135.0000157.0000203.0000207.0000229.0000235.0000257.0000261.0000

DI
.000 .0413 .0292 .0255 .0293 .0558 .0295 .0422 .1081 .0340 .1001 .0477

NAAL 737 OA143 ORB/B66- GR WELL RMS DYN PRESS (RFCC14)

Q(PSF)(1) = 61.137 ALPHA (5) = 19.500 BETA = 4.0040 RN/L = 1.4200

SECTION (1)GEAR DYN PRESS DEPENDENT VARIABLE CP-RMS

TAP	103.0000	107.0000	129.0000	135.0000	157.0000	203.0000	207.0000	229.0000	235.0000	257.0000	261.0000
DI	.000	.0374	.0236	.0210	.0226	.0617	.0282	.0309	.0745	.0269	.0763	.0374

NAAL 737 OA143 ORB/B56- GR WELL RMS DYN PRESS (RFCC15) (25 FEB 76)

REFERENCE DATA

SREF = 2690.0000 SQ.FT. XMRP = 1076.7000 IN.XO
LREF = 474.8000 IN YMRP = .0000 IN.YO
BREF = 936.6800 IN. ZMRP = 375.0000 IN.ZO
SCALE = .0405

PARAMETRIC DATA

BETA = 8.000 BOFLAP = -11.700
ELEVON = 15.000 MACH = .200
SPDBRK = 25.000 GROPLN = 1.000
LNGRPS = 1.000 LNDGDR = 100.000

Q(PSF)(1) = 60.482 ALPHA (1) = .200 BETA = 8.0480 RN/L = 1.4200

SECTION (1)GEAR DYN PRESS DEPENDENT VARIABLE CP-RMS

TAP 103.0000107.0000129.0000135.0000157.0000203.0000207.0000229.0000235.0000257.0000261.0000

D1
.000 .0382 .0277 .0361 .0324 .1212 .0277 .0381 .0394 .0309 .1121 .0453

Q(PSF)(1) = 60.393 ALPHA (2) = 5.550 BETA = 8.0480 RN/L = 1.4200

SECTION (1)GEAR DYN PRESS DEPENDENT VARIABLE CP-RMS

TAP 103.0000107.0000129.0000135.0000157.0000203.0000207.0000229.0000235.0000257.0000261.0000

D1
.000 .0418 .0361 .0272 .0295 .1299 .0304 .0466 .1215 .0579 .1392 .0704

Q(PSF)(1) = 60.910 ALPHA (3) = 10.930 BETA = 8.0480 RN/L = 1.4200

SECTION (1)GEAR DYN PRESS DEPENDENT VARIABLE CP-RMS

TAP 103.0000107.0000129.0000135.0000157.0000203.0000207.0000229.0000235.0000257.0000261.0000

D1
.000 .0422 .0337 .0271 .0292 .1238 .0261 .0473 .1172 .0454 .1239 .0598

Q(PSF)(1) = 61.018 ALPHA (4) = 16.300 BETA = 8.0480 RN/L = 1.4200

SECTION (1)GEAR DYN PRESS DEPENDENT VARIABLE CP-RMS

TAP 103.0000107.0000129.0000135.0000157.0000203.0000207.0000229 0000235.0000257.0000261.0000

D1
.000 .0384 .0268 .0241 .0255 .1030 .0343 .0459 .0830 .0320 .0944 .0441

NAAL 737 OA143 ORB/B66- GR WELL RMS DYN PRESS (RFCC15)

Q(PSF)(1) = 61.484 ALPHA (5) = 19.510 BETA = 8.0480 RN/L = 1.4200

SECTION (1)GEAR DYN PRESS DEPENDENT VARIABLE CP-RMS

TAP	103.0000	107.0000	129.0000	135.0000	157.0000	203.0000	207.0000	229.0000	235.0000	257.0000	281.0000
DI	.000	.0383	.0267	.0242	.0267	.1050	.0314	.0374	.0871	.0297	.0865	.0423

NAAL 737 OA143 ORB/B66- GR WELL RMS DYN PRESS (RFCC16) (25 FEB 76)

REFERENCE DATA

SREF = 2690.0000 SQ.FT. XMRP = 1076.7000 IN.XO
LREF = 474.8000 IN YMRP = .0000 IN.YO
BREF = 936.6800 IN. ZMRP = 375.0000 IN.ZO
SCALE = .0405

PARAMETRIC DATA

BETA = .000 BDFLAP = -11.700
ELEVON = 15.000 MACH = .200
SPDBRK = 25.000 GRDPLN = .000
LNGRPS = 1.000 LNDGDR = 100.000

Q(PSF)(1) = 74.347 ALPHA (1) = .120 BETA = -.12000-01 RN/L = 1.6000

SECTION (1)GEAR DYN PRESS DEPENDENT VARIABLE CP-RMS

TAP 103.0000107.0000129.0000135.0000157.0000203.0000207.0000229.0000235.0000257.0000261.0000

D1
.000 .0235 .0258 .0198 .0204 .0542 .0240 .0244 .0407 .0199 .0498 .0986

Q(PSF)(1) = 75.273 ALPHA (2) = 5.370 BETA = -.12000-01 RN/L = 1.6000

SECTION (1)GEAR DYN PRESS DEPENDENT VARIABLE CP-RMS

TAP 103.0000107.0000129.0000135.0000157.0000203.0000207.0000229.0000235.0000257.0000261.0000

D1
.000 .0254 .0277 .0215 .0230 .0515 .0165 .0242 .0378 .0161 .0790 .0550

Q(PSF)(1) = 75.212 ALPHA (3) = 10.620 BETA = -.12000-01 RN/L = 1.6000

SECTION (1)GEAR DYN PRESS DEPENDENT VARIABLE CP-RMS

TAP 103.0000107.0000129.0000135.0000157.0000203.0000207.0000229.0000235.0000257.0000261.0000

D1
.000 .0230 .0252 .0203 .0198 .0460 .0161 .0338 .0319 .0277 .1441 .0593

Q(PSF)(1) = 74.755 ALPHA (4) = 15.880 BETA = -.12000-01 RN/L = 1.6000

SECTION (1)GEAR DYN PRESS DEPENDENT VARIABLE CP-RMS

TAP 103.0000107.0000129.0000135.0000157.0000203.0000207.0000229.0000235.0000257.0000261.0000

D1
.000 .0199 .0233 .0195 .0201 .0411 .0244 .0395 .0768 .0521 .1329 .0826

NAAL 737 OA143 ORB/B66- OR WELL RMS DYN PRESS (RFCC16)

Q(PSF)(1) = 75.084 ALPHA (5) = 19.030 BETA = -.12000-01 RN/L = 1.6000

SECTION (1)GEAR DYN PRESS DEPENDENT VARIABLE CP-RMS

TAP	103.0000	107.0000	129.0000	135.0000	157.0000	203.0000	207.0000	229.0000	235.0000	257.0000	261.0000
DI	.000	.0171	.0202	.0181	.0169	.0395	.0228	.0296	.0900	.0546	.1166	.0684

NAAL 737 OA143 ORB/B66- GR WELL RMS DYN PRESS (RFCC17) (25 FEB 76)

REFERENCE DATA

SREF = 2690.0000 SQ.FT. XMRP = 1076.7000 IN.XO
LREF = 474.8000 IN YMRP = .0000 IN.YO
BREF = 936.6800 IN. ZMRP = 375.0000 IN.ZO
SCALE = .0405

PARAMETRIC DATA

BETA = -4.000 BDFLAP = -11.700
ELEVON = 15.000 MACH = .200
SPDBRK = 25.000 GRDPLN = .000
LNGRPS = 1.000 LNDGDR = 100.000

Q(PSF)(1) = 74.625 ALPHA (1) = .130 BETA = -4.0750 RN/L = 1.6000

SECTION (1)GEAR DYN PRESS DEPENDENT VARIABLE CP-RMS

TAP 103.0000107.0000129.0000135.0000157.0000203.0000207.0000229.0000235.0000257.0000261.0000

D1
.000 .0225 .0221 .0190 .0211 .0465 .0355 .0318 .0529 .0316 .0623 .1887

Q(PSF)(1) = 75.009 ALPHA (2) = 5.410 BETA = -4.0750 RN/L = 1.6000

SECTION (1)GEAR DYN PRESS DEPENDENT VARIABLE CP-RMS

TAP 103.0000107.0000129.0000135.0000157.0000203.0000207.0000229.0000235.0000257.0000261.0000

D1
.000 .0236 .0218 .0202 .0282 .0459 .0227 .0235 .0374 .0204 .0467 .0966

Q(PSF)(1) = 74.710 ALPHA (3) = 10.640 BETA = -4.0750 RN/L = 1.6000

SECTION (1)GEAR DYN PRESS DEPENDENT VARIABLE CP-RMS

TAP 103.0000107.0000129.0000135.0000157.0000203.0000207.0000229.0000235.0000257.0000261.0000

D1
.000 .0238 .0222 .0217 .0283 .0460 .0151 .0248 .0221 .0163 .0853 .0448

Q(PSF)(1) = 74.587 ALPHA (4) = 15.910 BETA = -4.0750 RN/L = 1.6000

SECTION (1)GEAR DYN PRESS DEPENDENT VARIABLE CP-RMS

TAP 103.0000107.0000129.0000135.0000157.0000203.0000207.0000229.0000235.0000257.0000261.0000

D1
.000 .0213 .0191 .0189 .0190 .0422 .0163 .0413 .0273 .0271 .1272 .0577

NAAL 737 OA143 ORB/B66- GR WELL RMS DYN PRESS (RFCC17)

Q(PSF)(1) = 75.106 ALPHA (5) = 19.060 BETA = -4.0750 RN/L = 1.6000

SECTION (1)GEAR DYN PRESS DEPENDENT VARIABLE CP-RMS

TAP	103.0000	107.0000	129.0000	135.0000	157.0000	203.0000	207.0000	229.0000	235.0000	257.0000	261.0000
DI	.000	.0218	.0181	.0182	.0189	.0443	.0205	.0376	.0539	.0458	.1214	.0763

NAAL 737 OA143 ORB/866- GR WELL RMS DYN PRESS (RFCC18) (25 FEB 76)

REFERENCE DATA

SREF = 2690.0000 SQ.FT. XMRP = 1076.7000 IN.XO
LREF = 474.8000 IN YMRP = .0000 IN.YO
BREF = 936.6800 IN. ZMRP = 375.0000 IN.ZO
SCALE = .0405

PARAMETRIC DATA

BETA = -8.000 BDFLAP = -11.700
ELEVON = 15.000 MACH = .200
SPOBRK = 25.000 GRDPLN = .000
LNGRPS = 1.000 LNDGOR = 100.000

Q(PSF)(1) = 74.648 ALPHA (1) = .140 BETA = -8.0920 RN/L = 1.6000

SECTION (1)GEAR DYN PRESS DEPENDENT VARIABLE CP-RMS

TAP 103.0000107.0000129.0000135.0000157.0000203.0000207.0000229.0000235.0000257.0000261.0000

D1
.000 .0257 .0213 .0178 .0327 .0461 .0296 .0260 .0434 .0243 .0646 .2564

Q(PSF)(1) = 75.027 ALPHA (2) = 5.420 BETA = -8.0920 RN/L = 1.6000

SECTION (1)GEAR DYN PRESS DEPENDENT VARIABLE CP-RMS

TAP 103.0000107.0000129.0000135.0000157.0000203.0000207.0000229.0000235.0000257.0000261.0000

D1
.000 .0294 .0213 .0197 .0230 .0439 .0234 .0217 .0522 .0191 .0482 .1563

Q(PSF)(1) = 74.745 ALPHA (3) = 10.650 BETA = -8.0920 RN/L = 1.6000

SECTION (1)GEAR DYN PRESS DEPENDENT VARIABLE CP-RMS

TAP 103.0000107.0000129.0000135.0000157.0000203.0000207.0000229.0000235.0000257.0000261.0000

D1
.000 .0294 .0208 .0204 .0204 .0463 .0226 .0217 .0343 .0204 .0525 .1092

Q(PSF)(1) = 74.766 ALPHA (4) = 15.920 BETA = -8.0920 RN/L = 1.6000

SECTION (1)GEAR DYN PRESS DEPENDENT VARIABLE CP-RMS

TAP 103.0000107.0000129.0000135.0000157.0000203.0000207.0000229.0000235.0000257.0000261.0000

D1
.000 .0231 .0192 .0205 .0217 .0422 .0140 .0272 .0284 .0158 .0929 .0899

NAAL 737 OA143 ORB/B66- GR WELL RMS DYN PRESS (RFCC18)

Q(PSF)(1) = 74.939 ALPHA (5) = 19.070 BETA = -8.0920 RN/L = 1.6000

SECTION (1)GEAR DYN PRESS DEPENDENT VARIABLE CP-RMS

TAP	103.0000	107.0000	129.0000	135.0000	157.0000	203.0000	207.0000	229.0000	235.0000	257.0000	261.0000
DI	.000	.0205	.0182	.0192	.0205	.0413	.0141	.0292	.0270	.0235	.1184	.0840

NAAL 737 OA143 ORB/B66- GR WELL RMS DYN PRESS (RFCC19) (23 FEB 76)

REFERENCE DATA

SREF = 2690.0000 SQ.FT. XMRP = 1076.7000 IN.XO
LREF = 474.8000 IN YMRP = .0000 IN.YO
BREF = 936.6800 IN. ZMRP = 375.0000 IN.ZO
SCALE = .0405

PARAMETRIC DATA

BETA = 4.000 BDFLAP = -11.700
ELEVON = 15.000 MACH = .200
SPDBRK = 25.000 GRDPLN = .000
LNGRPS = 1.000 LNDGDR = 100.000

Q(PSF)(1) = 74.953 ALPHA (1) = .150 BETA = 4.0000 RN/L = 1.6000

SECTION (1)GEAR DYN PRESS DEPENDENT VARIABLE CP-RMS

TAP 103.0000107.0000129.0000135.0000157.0000203.0000207.0000229.0000235.0000257.0000261.0000

D1
.000 .0205 .0227 .0219 .0194 .0522 .0169 .0187 .0205 .0160 .0568 .0575

Q(PSF)(1) = 74.926 ALPHA (2) = 5.360 BETA = 4.0000 RN/L = 1.6000

SECTION (1)GEAR DYN PRESS DEPENDENT VARIABLE CP-RMS

TAP 103.0000107.0000129.0000135.0000157.0000203.0000207.0000229.0000235.0000257.0000261.0000

D1
.000 .0224 .0251 .0285 .0218 .0568 .0190 .0244 .0333 .0268 .1280 .0503

Q(PSF)(1) = 74.797 ALPHA (3) = 10.620 BETA = 4.0000 RN/L = 1.6000

SECTION (1)GEAR DYN PRESS DEPENDENT VARIABLE CP-RMS

TAP 103.0000107.0000129.0000135.0000157.0000203.0000207.0000229.0000235.0000257.0000261.0000

D1
.000 .0246 .0272 .0309 .0239 .0578 .0241 .0268 .0742 .0461 .1218 .0697

Q(PSF)(1) = 75.129 ALPHA (4) = 15.860 BETA = 4.0000 RN/L = 1.6000

SECTION (1)GEAR DYN PRESS DEPENDENT VARIABLE CP-RMS

TAP 103.0000107.0000129.0000135.0000157.0000203.0000207.0000229.0000235.0000257.0000261.0000

D1
.000 .0188 .0204 .0182 .0174 .0540 .0239 .0338 .0874 .0517 .1143 .0648

NAAL 737 OA143 ORB/B66- OR WELL RMS DYN PRESS (RFCC19)

Q(PSF)(1) = 75.229 ALPHA (5) = 19.040 BETA = 4.0000 RN/L = 1.6000

SECTION (1)GEAR DYN PRESS DEPENDENT VARIABLE CP-RMS

TAP	103.0000	107.0000	129.0000	135.0000	157.0000	203.0000	207.0000	229.0000	235.0000	257.0000	261.0000
DI	.000	.0187	.0214	.0184	.0185	.0641	.0240	.0299	.0943	.0512	.1178	.0634

NAAL 737 OA143 ORB/B66- GR WELL RMS DYN PRESS (RFCC20) (25 FEB 76)

REFERENCE DATA

SREF = 2690.0000 SQ.FT. XMRP = 1076.7000 IN.XO
LREF = 474.8000 IN YMRP = .0000 IN.YO
BREF = 936.6800 IN. ZMRP = 375.0000 IN.ZO
SCALE = .0405

PARAMETRIC DATA

BETA = 8.000 BDFLAP = -11.700
ELEVON = 15.000 MACH = .200
SPDBRK = 25.000 GRDPLN = .000
LNGRPS = 1.000 LNDGDR = 100.000

Q(PSF)(1) = 75.177 ALPHA (1) = .130 BETA = 8.0600 RN/L = 1.6000

SECTION (1)GEAR DYN PRESS DEPENDENT VARIABLE CP-RMS

TAP 103.0000107.0000129.0000135.0000157.0000203.0000207.0000229.0000235.0000257.0000261.0000

D1
.000 .0211 .0266 .0339 .0229 .0882 .0225 .0255 .0318 .0236 .0970 .0487

Q(PSF)(1) = 74.762 ALPHA (2) = 5.350 BETA = 8.0600 RN/L = 1.6000

SECTION (1)GEAR DYN PRESS DEPENDENT VARIABLE CP-RMS

TAP 103.0000107.0000129.0000135.0000157.0000203.0000207.0000229.0000235.0000257.0000261.0000

D1
.000 .0238 .0335 .0245 .0232 .1095 .0253 .0276 .0684 .0451 .1073 .0743

Q(PSF)(1) = 75.148 ALPHA (3) = 10.610 BETA = 8.0600 RN/L = 1.6000

SECTION (1)GEAR DYN PRESS DEPENDENT VARIABLE CP-RMS

TAP 103.0000107.0000129.0000135.0000157.0000203.0000207.0000229.0000235.0000257.0000261.0000

D1
.000 .0224 .0311 .0225 .0219 .0993 .0262 .0295 .0990 .0569 .1271 .0695

Q(PSF 1) = 74.803 ALPHA (4) = 15.840 BETA = 8.0600 RN/L = 1.6000

SECTION (1)GEAR DYN PRESS DEPENDENT VARIABLE CP-RMS

TAP 103.0000107.0000129.0000135.0000157.0000203.0000207.0000229.0000235.0000257.0000261.0000

D1
.000 .0213 .0259 .0224 .0218 .0919 .0231 .0292 .1110 .0536 .1358 .0694

NAAL 737 OA143 ORB/866- GR WELL RMS DYN PRESS (RFCC20)

Q(PSF)(1) = 74.856 ALPHA (5) = 19.010 BETA = 8.0600 RN/L = 1.6000

SECTION (1)GEAR DYN PRESS DEPENDENT VARIABLE CP-RMS

TAP	103.0000	107.0000	129.0000	135.0000	157.0000	203.0000	207.0000	229.0000	235.0000	257.0000	261.0000	
D1	.000	.0189	.0219	.0205	.0195	.0829	.0224	.0285	.1053	.0482	.1254	.0644

NAAL 737 OA143 ORB/B66- GR WELL RMS DYN PRESS (RFCC21) (25 FEB 76)

REFERENCE DATA

SREF = 2690.0000 SQ.FT. XMRP = 1076.7000 IN.XO
LREF = 474.8000 IN YMRP = .0000 IN.YO
BREF = 936.6800 IN. ZMRP = 375.0000 IN.ZO
SCALE = .0405

PARAMETRIC DATA

BETA = .000 BDFLAP = -11.700
ELEVON = 10.000 MACH = .200
SPDBRK = 25.000 GRDPLN = .000
LNGRPS = 1.000 LNDGDR = 100.000

Q(PSF)(1) = 74.925 ALPHA (1) = .080 BETA = -.40000-02 RN/L = 1.6000

SECTION (1)GEAR DYN PRESS DEPENDENT VARIABLE CP-RMS

TAP	103.0000	107.0000	129.0000	135.0000	157.0000	203.0000	207.0000	229.0000	235.0000	257.0000	261.0000
DI	.000	.0224	.0220	.0252	.0206	.0527	.0240	.0197	.0440	.0199	.0511	.1013

Q(PSF)(1) = 74.840 ALPHA (2) = 5.340 BETA = -.40000-02 RN/L = 1.6000

SECTION (1)GEAR DYN PRESS DEPENDENT VARIABLE CP-RMS

TAP	103.0000	107.0000	129.0000	135.0000	157.0000	203.0000	207.0000	229.0000	235.0000	257.0000	261.0000
DI	.000	.0251	.0251	.0276	.0229	.0545	.0164	.0188	.0338	.0159	.0762	.0554

Q(PSF)(1) = 75.163 ALPHA (3) = 10.550 BETA = -.40000-02 RN/L = 1.6000

SECTION (1)GEAR DYN PRESS DEPENDENT VARIABLE CP-RMS

TAP	103.0000	107.0000	129.0000	135.0000	157.0000	203.0000	207.0000	229.0000	235.0000	257.0000	261.0000
DI	.000	.0222	.0223	.0263	.0195	.0427	.0155	.0243	.0259	.0277	.1441	.0552

Q(PSF)(1) = 74.509 ALPHA (4) = 15.810 BETA = -.40000-02 RN/L = 1.6000

SECTION (1)GEAR DYN PRESS DEPENDENT VARIABLE CP-RMS

TAP	103.0000	107.0000	129.0000	135.0000	157.0000	203.0000	207.0000	229.0000	235.0000	257.0000	261.0000
DI	.000	.0192	.0196	.0250	.0198	.0403	.0242	.0333	.0724	.0519	.1381	.0832

NAAL 737 OA143 ORB/BBB- GR WELL RMS DYN PRESS (RFCC21)

Q(PSF)(1) = 74.878 ALPHA (5) = 18.980 BETA = -.40000-02 RN/L = 1.6000

SECTION (1)GEAR DYN PRESS DEPENDENT VARIABLE CP-RMS

TAP	103.0000	107.0000	129.0000	135.0000	157.0000	203.0000	207.0000	229.0000	235.0000	257.0000	281.0000
DI	.000	.0167	.0166	.0241	.0166	.0379	.0233	.0282	.0890	.0550	.1151	.0712

NAAL 737 OA143 ORB/B66- GR WELL RMS DYN PRESS (RFCC22) (25 FEB 76)

REFERENCE DATA

SREF = 2690.0000 SQ.FT. XMRP = 1076.7000 IN.XO
LREF = 474.8000 IN YMRP = .0000 IN.YO
BREF = 936.6800 IN. ZMRP = 375.0000 IN.ZO
SCALE = .0405

PARAMETRIC DATA

BETA = -4.000 BDFLAP = -11.700
ELEVON = 10.000 MACH = .200
SPDBRK = 25.000 GRDHLN = .000
LNGRPS = 1.000 LNDGDR = 100.000

Q(PSF)(1) = 74.554 ALPHA (1) = .090 BETA = -4.0760 RN/L = 1.6000

SECTION (1)GEAR DYN PRESS DEPENDENT VARIABLE CP-RMS

TAP 103.0000107.0000129.0000135.0000157.0000203.0000207.0000229.0000235.0000257.0000261.0000

DI
.000 .0227 .0222 .0182 .0211 .0418 .0352 .0278 .0520 .0372 .0624 .1958

Q(PSF)(1) = 74.721 ALPHA (2) = 5.300 BETA = -4.0760 RN/L = 1.6000

SECTION (1)GEAR DYN PRESS DEPENDENT VARIABLE CP-RMS

TAP 103.0000107.0000129.0000135.0000157.0000203.0000207.0000229.0000235.0000257.0000261.0000

DI
.000 .0232 .0217 .0197 .0273 .0441 .0220 .0202 .0385 .0256 .0466 .0990

Q(PSF)(1) = 75.219 ALPHA (3) = 10.570 BETA = -4.0760 RN/L = 1.6000

SECTION (1)GEAR DYN PRESS DEPENDENT VARIABLE CP-RMS

TAP 103.0000107.0000129.0000135.0000157.0000203.0000207.0000229.0000235.0000257.0000261.0000

DI
.000 .0236 .0221 .0213 .0279 .0430 .0154 .0209 .0259 .0228 .0835 .0475

Q(PSF)(1) = 75.080 ALPHA (4) = 15.810 BETA = -4.0760 RN/L = 1.6000

SECTION (1)GEAR DYN PRESS DEPENDENT VARIABLE CP-RMS

TAP 103.0000107.0000129.0000135.0000157.0000203.0000207.0000229.0000235.0000257.0000261.0000

DI
.000 .0216 .0194 .0185 .0194 .0405 .0159 .0306 .0314 .0316 .1293 .0572

NAAL 737 OA143 ORB/B66- GR WELL RMS DYN PRESS (RFCC22)

Q(PSF)(1) = 75.091 ALPHA (5) = 18.980 BETA = -4.0760 RN/L = 1.6000

SECTION (1)GEAR DYN PRESS DEPENDENT VARIABLE CP-RMS

TAP	103.0000	107.0000	129.0000	135.0000	157.0000	203.0000	207.0000	229.0000	235.0000	257.0000	261.0000
DI	.000	.0213	.0179	.0175	.0189	.0401	.0204	.0319	.0526	.0465	.1231	.0785

NAAL 737 OA143 ORB/B66- GR WELL RMS DYN PRESS (RFCC23) (25 FEB 76)

REFERENCE DATA

SREF =	2690.0000 SQ.FT.	XMRP =	1076.7000 IN.XO		
LREF =	474.8000 IN	YMRP =	.0000 IN.YO		
BREF =	936.6800 IN.	ZMRP =	375.0000 IN.ZO		
SCALE =	.0405				

PARAMETRIC DATA

BETA =	-8.000	BDFLAP =	-11.700
ELEVON =	10.000	MACH =	.200
SPDBRK =	25.000	GRDPLN =	.000
LNGRPS =	1.000	LNDGDR =	100.000

Q(PSF)(1) = 74.536 ALPHA (1) = .100 BETA = -8.1160 RN/L = 1.6000

SECTION (1)GEAR DYN PRESS DEPENDENT VARIABLE CP-RMS

TAP 103.0000107.0000129.0000135.0000157.0000203.0000207.0000229.0000235.0000257.0000261.0000

D1
.000 .0253 .0208 .0172 .0327 .0429 .0299 .0222 .0611 .0304 .0558 .2210

Q(PSF)(1) = 74.663 ALPHA (2) = 5.320 BETA = -8.1160 RN/L = 1.6000

SECTION (1)GEAR DYN PRESS DEPENDENT VARIABLE CP-RMS

TAP 103.0000107.0000129.0000135.0000157.0000203.0000207.0000229.0000235.0000257.0000261.0000

D1
.000 .0297 .0213 .0197 .0235 .0422 .0251 .0207 .0542 .0272 .0515 .1654

Q(PSF)(1) = 74.856 ALPHA (3) = 10.590 BETA = -8.1160 RN/L = 1.6000

SECTION (1)GEAR DYN PRESS DEPENDENT VARIABLE CP-RMS

TAP 103.0000107.0000129.0000135.0000157.0000203.0000207.0000229.0000235.0000257.0000261.0000

D1
.000 .0295 .0205 .0200 .0206 .0415 .0226 .0210 .0364 .0267 .0513 .0921

Q(PSF)(1) = 74.917 ALPHA (4) = 15.850 BETA = -8.1160 RN/L = 1.6000

SECTION (1)GEAR DYN PRESS DEPENDENT VARIABLE CP-RMS

TAP 103.0000107.0000129.0000135.0000157.0000203.0000207.0000229.0000235.0000257.0000261.0000

D1
.000 .0228 .0190 .0202 .0218 .0397 .0141 .0215 .0263 .0230 .0894 .0429

NAAL 737 OA143 ORB/B66- GR WELL RMS DYN PRESS (RFCC23)

Q(PSF)(1) = 75.071 ALPHA (5) = 19.010 BETA = -8.1160 RN/L = 1.6000

SECTION (1)GEAR DYN PRESS DEPENDENT VARIABLE CP-RMS

TAP	103.0000	107.0000	129.0000	135.0000	157.0000	203.0000	207.0000	229.0000	235.0000	257.0000	261.0000
DI	.000	.0205	.0179	.0191	.0209	.0413	.0145	.0320	.0269	.0277	.1176	.0464

NAAL 737 OA143 ORB/866- OR WELL RMS DYN PRESS (RFCC24) (25 FEB 76)

REFERENCE DATA

SREF = 2690.0000 SQ.FT. XMRP = 1076.7000 IN.XO
LREF = 474.8000 IN YMRP = .0000 IN.YO
BREF = 933.6800 IN. ZMRP = 375.0000 IN.ZO
SCALE = .0405

PARAMETRIC DATA

BETA = 4.000 BDFLAP = -11.700
ELEVON = 10.000 MACH = .200
SPDBRK = 25.000 GRDPLN = .000
LNGRPS = 1.000 LNDGDR = 100.000

Q(PSF)(1) = 75.221 ALPHA (1) = .070 BETA = 4.0020 RN/L = 1.6000

SECTION (1)GEAR DYN PRESS DEPENDENT VARIABLE CP-RMS

TAP 103.0000107.0000129.0000135.0000157.0000203.0000207.0000229.0000235.0000257.0000261.0000

D1
.000 .0204 .0223 .0215 .0198 .0501 .0172 .0184 .0196 .0240 .0531 .0590

Q(PSF)(1) = 74.876 ALPHA (2) = 5.290 BETA = 4.0020 RN/L = 1.6000

SECTION (1)GEAR DYN PRESS DEPENDENT VARIABLE CP-RMS

TAP 103.0000107.0000129.0000135.0000157.0000203.0000207.0000229.0000235.0000257.0000261.0000

D1
.000 .0232 .0259 .0284 .0225 .0563 .0191 .0247 .0477 .0308 .1302 .0595

Q(PSF)(1) = 75.091 ALPHA (3) = 10.530 BETA = 4.0020 RN/L = 1.6000

SECTION (1)GEAR DYN PRESS DEPENDENT VARIABLE CP-RMS

TAP 103.0000107.0000129.0000135.0000157.0000203.0000207.0000229.0000235.0000257.0000261.0000

D1
.000 .0240 .0266 .0300 .0233 .0567 .0235 .0263 .0702 .0498 .1233 .0705

Q(PSF)(1) = 74.978 ALPHA (4) = 15.790 BETA = 4.0020 RN/L = 1.6000

SECTION (1)GEAR DYN PRESS DEPENDENT VARIABLE CP-RMS

TAP 103.0000107.0000129.0000135.0000157.0000203.0000207.0000229.0000235.0000257.0000261.0000

D1
.000 .0191 .0206 .0183 .0180 .0527 .0248 .0306 .0858 .0547 .1147 .0649

NAAL 737 OA143 ORB/B66- GR WELL RMS DYN PRESS (RFCC24)

Q(PSF)(1) = 75.430 ALPHA (5) = 18.950 BETA = 4.0020 RN/L = 1.6000

SECTION (1)GEAR DYN PRESS DEPENDENT VARIABLE CP-RMS

TAP	103.0000	107.0000	129.0000	135.0000	157.0000	203.0000	207.0000	229.0000	235.0000	257.0000	261.0000
D1	.000	.0180	.0203	.0178	.0182	.0625	.0240	.0264	.0940	.0526	.1158	.0625

NAAL 737 OA143 ORB/B66- GR WELL RMS DYN PRESS (RFCC25) (25 FEB 76)

REFERENCE DATA

SREF = 2690.0000 SQ.FT. XMRP = 1076.7000 IN.XO
LREF = 474.8000 IN YMRP = .0000 IN.YO
BREF = 936.6800 IN. ZMRP = 375.0000 IN.ZO
SCALE = .0405

PARAMETRIC DATA

BETA = 8.000 BDFLAP = -11.700
ELEVON = 10.000 MACH = .200
SPDBRK = 25.000 GRDPLN = .000
LNGRPS = 1.000 LNDGDR = 100.000

Q(PSF)(1) = 74.855 ALPHA (1) = .100 BETA = 8.0760 RN/L = 1.6000

SECTION (1)GEAR DYN PRESS DEPENDENT VARIABLE CP-RMS

TAP 103.0000107.0000129.0000135.0000157.0000203.0000207.0000229.0000235.0000257.0000261.0000

D1
.000 .0207 .0268 .0332 .0190 .1004 .0220 .0256 .0382 .0284 .0983 .0521

Q(PSF)(1) = 74.578 ALPHA (2) = 5.310 BETA = 8.0760 RN/L = 1.6000

SECTION (1)GEAR DYN PRESS DEPENDENT VARIABLE CP-RMS

TAP 103.0000107.0000129.0000135.0000157.0000203.0000207.0000229.0000235.0000257.0000261.0000

D1
.000 .0233 .0324 .0241 .0226 .1055 .0239 .0263 .0629 .0458 .1090 .0715

Q(PSF)(1) = 74.714 ALPHA (3) = 10.550 BETA = 8.0760 RN/L = 1.6000

SECTION (1)GEAR DYN PRESS DEPENDENT VARIABLE CP-RMS

TAP 103.0000107.0000129.0000135.0000157.0000203.0000207.0000229.0000235.0000257.0000261.0000

D1
.000 .0224 .0306 .0224 .0221 .0988 .0274 .0291 .0971 .0600 .1245 .0707

Q(PSF)(1) = 74.917 ALPHA (4) = 15.830 BETA = 8.0760 RN/L = 1.6000

SECTION (1)GEAR DYN PRESS DEPENDENT VARIABLE CP-RMS

TAP 103.0000107.0000129.0000135.0000157.0000203.0000207.0000229.0000235.0000257.0000261.0000

D1
.000 .0207 .0252 .0217 .0215 .0906 .0233 .0293 .1082 .0567 .1378 .0686

NAAL 737 OA143 ORB/866- GR WELL RMS DYN PRESS (RFCC25)

Q(PSF)(1) = 75.012 ALPHA (5) = 18.970 BETA = 8.0760 RN/L = 1.6000

SECTION (1)GEAR DYN PRESS DEPENDENT VARIABLE CP-RMS

TAP	103.0000	107.0000	129.0000	135.0000	157.0000	203.0000	207.0000	229.0000	235.0000	257.0000	261.0000
D1	.000	.0189	.0219	.0203	.0198	.0809	.0226	.0287	.1059	.0509	.1309	.0638

NAAL 737 OA143 ORB/B66- GR WELL RMS DYN PRESS (RFCC26) (25 FEB 76)

REFERENCE DATA

SREF = 2690.0000 SQ.FT. XMRP = 1076.7000 IN.XO
LREF = 474.8000 IN YMRP = .0000 IN.YO
BREF = 936.6800 IN. ZMRP = 375.0000 IN.ZO
SCALE = .0405

PARAMETRIC DATA

BETA = 8.000 BDFLAP = -11.700
ELEVON = 10.000 MACH = .200
SPDBRK = 25.000 GRDPLN = .000
LNGRPS = .000 LNDGDR = .000

Q(PSF)(1) = 74.630 ALPHA (1) = .070 BETA = 8.0640 RN/L = 1.6000

SECTION (1)GEAR DYN PRESS DEPENDENT VARIABLE CP-RMS

TAP 103.0000107.0000129.0000135.0000157.0000203.0000207.0000229.0000235.0000257.0000261.0000

D1
.000 .0214 .0061 .0056 .0047 .0198 .0134 .0090 .0096 .0066 .0083 .0064

Q(PSF)(1) = 74.673 ALPHA (2) = 5.330 BETA = 8.0640 RN/L = 1.6000

SECTION (1)GEAR DYN PRESS DEPENDENT VARIABLE CP-RMS

TAP 103.0000107.0000129.0000135.0000157.0000203.0000207.0000229.0000235.0000257.0000261.0000

D1
.000 .0209 .0058 .0194 .0048 .0199 .0144 .0069 .0045 .0233 .0074 .0060

Q(PSF)(1) = 74.754 ALPHA (3) = 10.570 BETA = 8.0640 RN/L = 1.6000

SECTION (1)GEAR DYN PRESS DEPENDENT VARIABLE CP-RMS

TAP 103.0000107.0000129.0000135.0000157.0000203.0000207.0000229.0000235.0000257.0000261.0000

D1
.000 .0217 .0074 .0061 .0060 .0205 .0181 .0079 .0066 .0065 .0071 .0076

Q(PSF)(1) = 75.142 ALPHA (4) = 15.850 BETA = 8.0640 RN/L = 1.6000

SECTION (1)GEAR DYN PRESS DEPENDENT VARIABLE CP-RMS

TAP 103.0000107.0000129.0000135.0000157.0000203.0000207.0000229.0000235.0000257.0000261.0000

D1
.000 .0077 .0063 .0059 .0049 .0201 .0152 .0135 .0057 .0067 .0079 .0079

NAAL 737 OA143 ORB/B66- GR WELL RMS DYN PRESS (RFCC28)

Q(PSF)(1) = 75.281 ALPHA (5) = 19.010 BETA = 8.0640 RN/L = 1.6000

SECTION (1)GEAR DYN PRESS DEPENDENT VARIABLE CP-RMS

TAP	103.0000	107.0000	129.0000	135.0000	157.0000	203.0000	207.0000	229.0000	235.0000	257.0000	281.0000
DI	.000	.0076	.0064	.0058	.0049	.0202	.0131	.0139	.0058	.0190	.0070	.0076

NAAL 737 OA143 ORB/B68- GR WELL RMS DYN PRESS (RFCC27) (25 FEB 76)

REFERENCE DATA

SREF = 2690.0000 SQ.FT. XMRP = 1076.7000 IN.XO
LREF = 474.8000 IN YMRP = .0000 IN.YO
BREF = 936.6800 IN. ZMRP = 375.0000 IN.ZO
SCALE = .0405

PARAMETRIC DATA

BETA = 8.000 BDFLAP = -11.700
ELEVON = 10.000 MACH = .200
SPDBRK = 25.000 GRDPLN = .000
LNGRPS = .000 LNDGDR = 40.000

Q(PSF)(1) = 74.825 ALPHA (1) = .080 BETA = 8.0460 RN/L = 1.6000

SECTION (1)GEAR DYN PRESS DEPENDENT VARIABLE CP-RMS

TAP 103.0000107.0000129.0000135.0000157.0000203.0000207.0000229.0000235.0000257.0000261.0000

D1
.000 .0132 .0157 .0120 .0111 .0575 .0318 .0298 .0366 .0332 .0516 .0900

Q(PSF)(1) = 74.635 ALPHA (2) = 5.320 BETA = 8.0460 RN/L = 1.6000

SECTION (1)GEAR DYN PRESS DEPENDENT VARIABLE CP-RMS

TAP 103.0000107.0000129.0000135.0000157.0000203.0000207.0000229.0000235.0000257.0000261.0000

D1
.000 .0121 .0159 .0117 .0117 .0600 .0287 .0302 .0315 .0335 .0683 .0690

Q(PSF)(1) = 74.745 ALPHA (3) = 10.550 BETA = 8.0460 RN/L = 1.6000

SECTION (1)GEAR DYN PRESS DEPENDENT VARIABLE CP-RMS

TAP 103.0000107.0000129.0000135.0000157.0000203.0000207.0000229.0000235.0000257.0000261.0000

D1
.000 .0118 .0165 .0132 .0121 .0646 .0371 .0453 .0655 .0862 .1749 .1146

Q(PSF)(1) = 75.047 ALPHA (4) = 15.820 BETA = 8.0460 RN/L = 1.6000

SECTION (1)GEAR DYN PRESS DEPENDENT VARIABLE CP-RMS

TAP 103.0000107.0000129.0000135.0000157.0000203.0000207.0000229.0000235.0000257.0000261.0000

D1
.000 .0113 .0164 .0136 .0118 .0736 .0339 .0420 .0707 .0832 .1534 .1073

NAAL 737 OA143 ORB/B66- GR WELL RMS DYN PRESS (RFCC27)

Q(PSF)(1) = 75.219 ALPHA (5) = 18.970 BETA = 8.0460 RN/L = 1.6000

SECTION (1)GEAR DYN PRESS DEPENDENT VARIABLE CP-RMS

TAP	103.0000	107.0000	129.0000	135.0000	157.0000	203.0000	207.0000	229.0000	235.0000	257.0000	261.0000
DI	.000	.0118	.0167	.0126	.0138	.0997	.0309	.0365	.0816	.0703	.1385	.0961

NAAL 737 OA143 ORB/B66- GR WELL RMS DYN PRESS (RFCC29) (25 FEB 76)

REFERENCE DATA

SREF = 2690.0000 SQ.FT. XMRP = 1076.7000 IN.XO
LREF = 474.8000 IN YMRP = .0000 IN.YO
BREF = 936.6800 IN. ZMRP = 375.0000 IN.ZO
SCALE = .0405

PARAMETRIC DATA

BETA = 8.000 BDFLAP = -11.700
ELEVON = 10.000 MACH = .200
SPDBRK = 25.000 GRDPLN = .000
LNGRPS = .000 LNDGDR = 80.000

Q(PSF)(1) = 74.852 ALPHA (1) = .090 BETA = 8.0640 RN/L = 1.6000

SECTION (1)GEAR DYN PRESS DEPENDENT VARIABLE CP-RMS

TAP 103.0000107.0000129.0000135.0000157.0000203.0000207.0000229.0000235.0000257.0000261.0000

D1
.000 .0173 .0232 .0216 .0153 .0817 .0287 .0302 .0379 .0328 .0846 .0773

Q(PSF)(1) = 74.912 ALPHA (2) = 5.330 BETA = 8.0640 RN/L = 1.6000

SECTION (1)GEAR DYN PRESS DEPENDENT VARIABLE CP-RMS

TAP 103.0000107.0000129.0000135.0000157.0000203.0000207.0000229.0000235.0000257.0000261.0000

D1
.000 .0162 .0206 .0180 .0160 .0779 .0244 .0291 .0495 .0647 .1772 .0932

Q(PSF)(1) = 74.701 ALPHA (3) = 10.560 BETA = 8.0640 RN/L = 1.6000

SECTION (1)GEAR DYN PRESS DEPENDENT VARIABLE CP-RMS

TAP 103.0000107.0000129.0000135.0000157.0000203.0000207.0000229.0000235.0000257.0000261.0000

D1
.000 .0157 .0221 .0169 .0180 .0820 .0302 .0350 .0886 .0793 .2093 .1240

Q(PSF)(1) = 74.945 ALPHA (4) = 15.810 BETA = 8.0640 RN/L = 1.6000

SECTION (1)GEAR DYN PRESS DEPENDENT VARIABLE CP-RMS

TAP 103.0000107.0000129.0000135.0000157.0000203.0000207.0000229.0000235.0000257.0000261.0000

D1
.000 .0146 .0207 .0201 .0177 .0835 .0244 .0298 .0936 .0477 .1544 .0938

NAAL 737 OA143 ORB/B66- GR WELL RMS DYN PRESS (RFCC29)

Q(PSF)(1) = 75.068 ALPHA (5) = 18.970 BETA = 8.0640 RN/L = 1.6000

SECTION (1)GEAR DYN PRESS DEPENDENT VARIABLE CP-RMS

TAP	103.0000	107.0000	129.0000	135.0000	157.0000	203.0000	207.0000	229.0000	235.0000	257.0000	261.0000
DI	.000	.0151	.0209	.0213	.0191	.0830	.0220	.0264	.0903	.0405	.1278	.0800

NAAL 737 OA143 ORB/B66- GR WELL RMS DYN PRESS (RFCC30) (25 FEB 76)

REFERENCE DATA

SREF = 2690.0000 SQ.FT. XMRP = 1076.7000 IN.XO
LREF = 474.8000 IN YMRP = .0000 IN.YO
BREF = 936.6800 IN. ZMRP = 375.0000 IN.ZO
SCALE = .0405

PARAMETRIC DATA

BETA = .000 BDFLAP = -11.700
ELEVON = 5.000 MACH = .200
SPDBRK = 25.000 GRDPLN = .000
LNGRPS = 1.000 LNDGDR = 100.000

Q(PSF)(1) = 74.778 ALPHA (1) = .010 BETA = -.20000-02 RN/L = 1.6000

SECTION (1)GEAR DYN PRESS DEPENDENT VARIABLE CP-RMS

TAP 103.0000107.0000129.0000135.0000157.0000203.0000207.0000229.0000235.0000257.0000261.0000

DI
.000 .0231 .0215 .0193 .0206 .0481 .0273 .0200 .0432 .0244 .0554 .1074

Q(PSF)(1) = 75.107 ALPHA (2) = 5.240 BETA = -.20000-02 RN/L = 1.6000

SECTION (1)GEAR DYN PRESS DEPENDENT VARIABLE CP-RMS

TAP 103.0000107.0000129.0000135.0000157.0000203.0000207.0000229.0000235.0000257.0000261.0000

DI
.000 .0257 .0257 .0234 .0240 .0506 .0181 .0190 .0232 .0184 .0758 .0546

Q(PSF)(1) = 74.917 ALPHA (3) = 10.470 BETA = -.20000-02 RN/L = 1.6000

SECTION (1)GEAR DYN PRESS DEPENDENT VARIABLE CP-RMS

TAP 103.0000107.0000129.0000135.0000157.0000203.0000207.0000229.0000235.0000257.0000261.0000

DI
.000 .0243 .0241 .0217 .0213 .0551 .0167 .0260 .0468 .0354 .1523 .0636

Q(PSF)(1) = 74.581 ALPHA (4) = 15.730 BETA = -.20000-02 RN/L = 1.6000

SECTION (1)GEAR DYN PRESS DEPENDENT VARIABLE CP-RMS

TAP 103.0000107.0000129.0000135.0000157.0000203.0000207.0000229.0000235.0000257.0000261.0000

DI
.000 .0204 .0200 .0202 .0204 .0463 .0258 .0333 .0599 .0548 .1729 .0850

NAAL 737 OA143 ORB/866- GR WELL RMS DYN PRESS (RFCC30)

Q(PSF)(1) = 74.671 ALPHA (5) = 18.890 BETA = -.20000-02 RN/L = 1.6000

SECTION (1)GEAR DYN PRESS DEPENDENT VARIABLE CP-RMS

TAP	103.0000	107.0000	129.0000	135.0000	157.0000	203.0000	207.0000	229.0000	235.0000	257.0000	261.0000
D1	.000	.0176	.0174	.0174	.0186	.0423	.0247	.0311	.0945	.0605	.1221	.0738

NAAL 737 OA143 ORB/B66- GR WELL RMS DYN PRESS (RFCC31) (25 FEB 76)

REFERENCE DATA

SREF = 2690.0000 SQ.FT. XMRP = 1076.7000 IN.XO
LREF = 474.8000 IN YMRP = .0000 IN.YO
BREF = 936.6800 IN. ZMRP = 375.0000 IN.ZO
SCALE = .0405

PARAMETRIC DATA

BETA = -4.000 BDFLAP = -11.700
ELEVON = 5.000 MACH = .200
SPDBRK = 25.000 GRDPLN = .000
LNGRPS = 1.000 LNDGDR = 100.000

Q(PSF)(1) = 74.774 ALPHA (1) = .000 BETA = -4.0520 RN/L = 1.6000

SECTION (1)GEAR DYN PRESS DEPENDENT VARIABLE CP-RMS

TAP 103.0000107.0000129.0000135.0000157.0000203.0000207.0000229.0000235.0000257.0000261.0000

DI
.000 .0234 .0221 .0189 .0210 .0457 .0384 .0291 .0511 .0370 .0777 .2194

Q(PSF)(1) = 74.830 ALPHA (2) = 5.250 BETA = -4.0520 RN/L = 1.6000

SECTION (1)GEAR DYN PRESS DEPENDENT VARIABLE CP-RMS

TAP 103.0000107.0000129.0000135.0000157.0000203.0000207.0000229.0000235.0000257.0000261.0000

DI
.000 .0243 .0222 .0217 .0284 .0487 .0234 .0208 .0375 .0216 .0506 .1362

Q(PSF)(1) = 74.740 ALPHA (3) = 10.480 BETA = -4.0520 RN/L = 1.6000

SECTION (1)GEAR DYN PRESS DEPENDENT VARIABLE CP-RMS

TAP 103.0000107.0000129.0000135.0000157.0000203.0000207.0000229.0000235.0000257.0000261.0000

DI
.000 .0233 .0214 .0210 .0296 .0456 .0177 .0226 .0185 .0183 .0890 .0524

Q(PSF)(1) = 74.902 ALPHA (4) = 15.760 BETA = -4.0520 RN/L = 1.6000

SECTION (1)GEAR DYN PRESS DEPENDENT VARIABLE CP-RMS

TAP 103.0000107.0000129.0000135.0000157.0000203.0000207.0000229.0000235.0000257.0000261.0000

DI
.000 .0209 .0188 .0184 .0189 .0418 .0168 .0282 .0213 .0280 .1399 .0560

NAAL 737 OA143 ORB/B66- GR WELL RMS DYN PRESS (RFCC31)

Q(PSF)(1) = 75.008 ALPHA (5) = 18.910 BETA = -4.0520 RN/L = 1.6000

SECTION (1)GEAR DYN PRESS DEPENDENT VARIABLE CP-RMS

TAP	103.0000	107.0000	129.0000	135.0000	157.0000	203.0000	207.0000	229.0000	235.0000	257.0000	261.0000
DI	.000	.0215	.0178	.0186	.0194	.0413	.0221	.0339	.0437	.0426	.1410	.0751

NAAL 737 OA143 ORB/B66- GR WELL RMS DYN PRESS (RFCC32) (25 FEB 76)

REFERENCE DATA

SREF = 2690.0000 SQ.FT. XMRP = 1076.7000 IN.XO
LREF = 474.8000 IN YMRP = .0000 IN.YO
BREF = 936.6800 IN. ZMRP = 375.0000 IN.ZO
SCALE = .0405

PARAMETRIC DATA

BETA = -8.000 BDFLAP = -11.700
ELEVON = 5.000 MACH = .200
SPDBRK = 25.000 GRDPLN = .000
LNGRPS = 1.000 LNDGDR = 100.000

Q(PSF)(1) = 74.794 ALPHA (1) = .050 BETA = -8.0950 RN/L = 1.6000

SECTION (1)GEAR DYN PRESS DEPENDENT VARIABLE CP-RMS

TAP 103.0000107.0000129.0000135.0000157.0000203.0000207.0000229.0000235.0000257.0000261.0000

D1
.000 .0268 .0217 .0189 .0326 .0449 .0323 .0234 .0626 .0300 .0566 .3024

Q(PSF)(1) = 74.711 ALPHA (2) = 5.250 BETA = -8.0950 RN/L = 1.6000

SECTION (1)GEAR DYN PRESS DEPENDENT VARIABLE CP-RMS

TAP 103.0000107.0000129.0000135.0000157.0000203.0000207.0000229.0000235.0000257.0000261.0000

D1
.000 .0312 .0221 .0210 .0243 .0404 .0294 .0220 .0545 .0306 .0584 .1872

Q(PSF)(1) = 75.015 ALPHA (3) = 10.520 BETA = -8.0950 RN/L = 1.6000

SECTION (1)GEAR DYN PRESS DEPENDENT VARIABLE CP-RMS

TAP 103.0000107.0000129.0000135.0000157.0000203.0000207.0000229.0000235.0000257.0000261.0000

D1
.000 .0293 .0208 .0218 .0211 .0403 .0222 .0202 .0358 .0235 .0490 .1143

Q(PSF)(1) = 74.620 ALPHA (4) = 15.790 BETA = -8.0950 RN/L = 1.6000

SECTION (1)GEAR DYN PRESS DEPENDENT VARIABLE CP-RMS

TAP 103.0000107.0000129.0000135.0000157.0000203.0000207.0000229.0000235.0000257.0000261.0000

D1
.000 .0232 .0192 .0217 .0228 .0392 .0152 .0227 .0270 .0191 .0935 .0450

NAAL 737 OA143 ORB/B66- GR WELL RMS DYN PRESS (RFCC32)

Q(PSF)(1) = 75.159 ALPHA (5) = 18.960 BETA = -8.0950 RN/L = 1.6000

SECTION (1)GEAR DYN PRESS DEPENDENT VARIABLE CP-RMS

TAP	103.0000	107.0000	129.0000	135.0000	157.0000	203.0000	207.0000	229.0000	235.0000	257.0000	281.0000
DI	.000	.0206	.0181	.0200	.0215	.0380	.0151	.0294	.0181	.0219	.1232	.0448

NAAL 737 OA143 OR8/B66- GR WELL RMS DYN PRESS (RFCC33) (25 FEB 76)

REFERENCE DATA

SREF = 2690.0000 SQ.FT. XMRP = 1076.7000 IN.XO
LREF = 474.8000 IN YMRP = .0000 IN.YO
BREF = 936.6800 IN. ZMRP = 375.0000 IN.ZO
SCALE = .0405

PARAMETRIC DATA

BETA = 4.000 BDFLAP = -11.700
ELEVON = 5.000 MACH = .200
SPDBRK = 25.000 GRDPLN = .000
LNGRPS = 1.000 LNDGDR = 100.000

Q(PSF)(1) = 74.447 ALPHA (1) = .010 BETA = 4.0220 RN/L = 1.6000

SECTION (1)GEAR DYN PRESS DEPENDENT VARIABLE CP-RMS

TAP 103.0000107.0000129.0000135.0000157.0000203.0000207.0000229.0000235.0000257.0000261.0000

D1
.000 .0209 .0226 .0222 .0203 .0499 .0194 .0193 .0195 .0182 .0527 .0633

Q(PSF)(1) = 74.778 ALPHA (2) = 5.230 BETA = 4.0220 RN/L = 1.6000

SECTION (1)GEAR DYN PRESS DEPENDENT VARIABLE CP-RMS

TAP 103.0000107.0000129.0000135.0000157.0000203.0000207.0000229.0000235.0000257.0000261.0000

D1
.000 .0234 .0258 .0294 .0229 .0574 .0210 .0259 .0237 .0265 .1344 .0504

Q(PSF)(1) = 74.920 ALPHA (3) = 10.470 BETA = 4.0220 RN/L = 1.6000

SECTION (1)GEAR DYN PRESS DEPENDENT VARIABLE CP-RMS

TAP 103.0000107.0000129.0000135.0000157.0000203.0000207.0000229.0000235.0000257.0000261.0000

D1
.000 .0249 .0266 .0307 .0244 .0581 .0244 .0265 .1129 .0703 .1310 .0684

Q(PSF)(1) = 74.943 ALPHA (4) = 15.750 BETA = 4.0220 RN/L = 1.6000

SECTION (1)GEAR DYN PRESS DEPENDENT VARIABLE CP-RMS

TAP 103.0000107.0000129.0000135.0000157.0000203.0000207.0000229.0000235.0000257.0000261.0000

D1
.000 .0198 .0213 .0189 .0189 .0565 .0271 .0289 .0877 .0579 .1161 .0675

NAAL 737 OA143 ORB/B66- GR WELL RMS DYN PRESS (RFCC33)

Q(PSF)(1) = 75.033 ALPHA (5) = 18.910 BETA = 4.0220 RN/L = 1.6000

SECTION (1)GEAR DYN PRESS DEPENDENT VARIABLE CP-RMS

TAP	103.0000	107.0000	129.0000	135.0000	157.0000	203.0000	207.0000	229.0000	235.0000	257.0000	281.0000
DI	.000	.0186	.0213	.0194	.0189	.1166	.0268	.0256	.0948	.0547	.1127	.0630

NAAL 737 OA143 ORB/B66- GR WELL RMS DYN PRESS (RFCC34) (25 FEB 76)

REFERENCE DATA

SREF = 2690.0000 SQ.FT. XMRP = 1076.7000 IN.XO
LREF = 474.8000 IN YMRP = .0000 IN.YO
BREF = 936.6800 IN. ZMRP = 375.0000 IN.ZO
SCALE = .0405

PARAMETRIC DATA

BETA = 8.000 BDFLAP = -11.700
ELEVON = 5.000 MACH = .200
SPDBRK = 25.000 GRDPLN = .000
LNGRPS = 1.000 LNDGDR = 100.000

Q(PSF)(1) = 74.899 ALPHA (1) = -4.170 BETA = 8.0825 RN/L = 1.6000

SECTION (1)GEAR DYN PRESS DEPENDENT VARIABLE CP-RMS

TAP 103.0000107.0000129.0000135.0000157.0000203.0000207.0000229.0000235.0000257.0000261.0000

D1
.000 .0212 .0251 .0294 .0188 .0726 .0241 .0234 .0270 .0210 .0604 .0715

Q(PSF)(1) = 74.671 ALPHA (2) = -2.060 BETA = 8.0825 RN/L = 1.6000

SECTION (1)GEAR DYN PRESS DEPENDENT VARIABLE CP-RMS

TAP 103.0000107.0000129.0000135.0000157.0000203.0000207.0000229.0000235.0000257.0000261.0000

D1
.000 .0212 .0259 .0324 .0189 .0705 .0254 .0261 .0284 .0240 .0870 .0599

Q(PSF)(1) = 74.844 ALPHA (3) = .020 BETA = 8.0825 RN/L = 1.6000

SECTION (1)GEAR DYN PRESS DEPENDENT VARIABLE CP-RMS

TAP 103.0000107.0000129.0000135.0000157.0000203.0000207.0000229.0000235.0000257.0000261.0000

D1
.000 .0216 .0274 .0343 .0194 .0790 .0255 .0272 .0317 .0273 .1033 .0513

Q(PSF)(1) = 74.740 ALPHA (4) = 2.090 BETA = 8.0825 RN/L = 1.6000

SECTION (1)GEAR DYN PRESS DEPENDENT VARIABLE CP-RMS

TAP 103.0000107.0000129.0000135.0000157.0000203.0000207.0000229.0000235.0000257.0000261.0000

D1
.000 .0220 .0281 .0298 .0200 .0862 .0227 .0253 .0321 .0275 .1175 .0459

NAAL 737 OA143 ORB/B66- GR WELL RMS DYN PRESS (RFCC34)

Q(PSF)(1) = 74.755 ALPHA (5) = 4.170 BETA = 8.0825 RN/L = 1.6000

SECTION (1)GEAR DYN PRESS DEPENDENT VARIABLE CP-RMS

TAP	103.0000	107.0000	129.0000	135.0000	157.0000	203.0000	207.0000	229.0000	235.0000	257.0000	261.0000
DI	.000	.0243	.0349	.0260	.0238	.1087	.0251	.0272	.0373	.0310	.1238	.0583

Q(PSF)(1) = 74.548 ALPHA (6) = 6.270 BETA = 8.0825 RN/L = 1.6000

SECTION (1)GEAR DYN PRESS DEPENDENT VARIABLE CP-RMS

TAP	103.0000	107.0000	129.0000	135.0000	157.0000	203.0000	207.0000	229.0000	235.0000	257.0000	261.0000
DI	.000	.0248	.0353	.0251	.0243	.1083	.0318	.0317	.0809	.0526	.1138	.0742

Q(PSF)(1) = 74.908 ALPHA (7) = 8.370 BETA = 8.0825 RN/L = 1.6000

SECTION (1)GEAR DYN PRESS DEPENDENT VARIABLE CP-RMS

TAP	103.0000	107.0000	129.0000	135.0000	157.0000	203.0000	207.0000	229.0000	235.0000	257.0000	261.0000
DI	.000	.0238	.0329	.0241	.0234	.1046	.0321	.0328	.1002	.0619	.1296	.0754

Q(PSF)(1) = 74.802 ALPHA (8) = 10.470 BETA = 8.0825 RN/L = 1.6000

SECTION (1)GEAR DYN PRESS DEPENDENT VARIABLE CP-RMS

TAP	103.0000	107.0000	129.0000	135.0000	157.0000	203.0000	207.0000	229.0000	235.0000	257.0000	261.0000
DI	.000	.0233	.0306	.0238	.0234	.1010	.0306	.0312	.1061	.0659	.1342	.0779

Q(PSF)(1) = 74.974 ALPHA (9) = 12.570 BETA = 8.0825 RN/L = 1.6000

SECTION (1)GEAR DYN PRESS DEPENDENT VARIABLE CP-RMS

TAP	103.0000	107.0000	129.0000	135.0000	157.0000	203.0000	207.0000	229.0000	235.0000	257.0000	261.0000
DI	.000	.0224	.0290	.0238	.0230	.0986	.0283	.0292	.1078	.0654	.1351	.0754

NAAL 737 OA143 ORB/B66- GR WELL RMS DYN PRESS (RFCC34)

Q(PSF)(1) = 75.025 ALPHA (10) = 14.650 BETA = 8.0825 RN/L = 1.6000

SECTION (1)GEAR DYN PRESS DEPENDENT VARIABLE CP-RMS

TAP 103.0000107.0000129.0000135.0000157.0000203.0000207.0000229.0000235.0000257.0000261.0000

D1
.000 .0217 .0262 .0238 .0227 .0950 .0263 .0279 .1057 .0605 .1303 .0698

Q(PSF)(1) = 74.833 ALPHA (11) = 16.770 BETA = 8.0825 RN/L = 1.6000

SECTION (1)GEAR DYN PRESS DEPENDENT VARIABLE CP-RMS

TAP 103.0000107.0000129.0000135.0000157.0000203.0000207.0000229.0000235.0000257.0000261.0000

D1
.000 .0210 .0235 .0228 .0218 .0931 .0260 .0288 .1074 .0593 .1271 .0683

Q(PSF)(1) = 75.143 ALPHA (12) = 18.880 BETA = 8.0825 RN/L = 1.6000

SECTION (1)GEAR DYN PRESS DEPENDENT VARIABLE CP-RMS

TAP 103.0000107.0000129.0000135.0000157.0000203.0000207.0000229.0000235.0000257.0000261.0000

D1
.000 .0193 .0219 .0215 .0207 .0872 .0250 .0284 .1079 .0518 .1234 .0648

NAAL 737 OA143 ORB/B65- GR WELL RMS DYN PRESS (RFCC35) (25 FEB 78)

REFERENCE DATA

SREF = 2690.0000 SQ.FT. XMRP = 1076.7000 IN.XO
LREF = 474.8000 IN YMRP = .0000 IN.YO
BREF = 936.6800 IN. ZMRP = 375.0000 IN.ZO
SCALE = .0405

PARAMETRIC DATA

BETA = .000 BDFLAP = -11.700
ELEVON = 5.000 MACH = .200
SPDBRK = 25.000 GRDPLN = .000
LNGRPS = 1.000 LNDGDR = 100.000

Q(PSF)(1) = 74.750 ALPHA (1) = .030 BETA = -.40000-02 RN/L = 1.6000

SECTION (1)GEAR DYN PRESS DEPENDENT VARIABLE CP-RMS

TAP 103.0000107.0000129.0000135.0000157.0000203.0000207.0000229.0000235.0000257.0000261.0000

DI
.000 .0232 .0215 .0195 .0210 .0530 .0279 .0213 .0470 .0278 .0579 .1070

Q(PSF)(1) = 75.016 ALPHA (2) = 5.230 BETA = -.40000-02 RN/L = 1.6000

SECTION (1)GEAR DYN PRESS DEPENDENT VARIABLE CP-RMS

TAP 103.0000107.0000129.0000135.0000157.0000203.0000207.0000229.0000235.0000257.0000261.0000

DI
.000 .0253 .0253 .0228 .0240 .0508 .0183 .0194 .0174 .0172 .0728 .0554

Q(PSF)(1) = 74.848 ALPHA (3) = 10.470 BETA = -.40000-02 RN/L = 1.6000

SECTION (1)GEAR DYN PRESS DEPENDENT VARIABLE CP-RMS

TAP 103.0000107.0000129.0000135.0000157.0000203.0000207.0000229.0000235.0000257.0000261.0000

DI
.000 .0232 .0227 .0217 .0210 .0436 .0165 .0248 .0202 .0273 .1516 .0551

Q(PSF)(1) = 74.845 ALPHA (4) = 15.750 BETA = -.40000-02 RN/L = 1.6000

SECTION (1)GEAR DYN PRESS DEPENDENT VARIABLE CP-RMS

TAP 103.0000107.0000129.0000135.0000157.0000203.0000207.0000229.0000235.0000257.0000261.0000

DI
.000 .0199 .0194 .0197 .0207 .0414 .0260 .0332 .1099 .0531 .1557 .0825

NAAL 737 OA143 ORB/865- GR WELL RMS DYN PRESS (RFCC35)

Q(PSF)(1) = 74.685 ALPHA (5) = 18.910 BETA = -.40000-02 RN/L = 1.6000

SECTION (1)GEAR DYN PRESS DEPENDENT VARIABLE CP-RMS

TAP	103.0000	107.0000	129.0000	135.0000	157.0000	203.0000	207.0000	229.0000	235.0000	257.0000	261.0000
DI	.000	.0174	.0170	.0170	.0184	.0327	.0247	.0297	.0897	.0603	.1197	.0718

NAAL 737 OA143 ORB/B65- GR WELL RMS DYN PRESS (RFCC36) (25 FEB 78)

REFERENCE DATA

SREF = 2690.0000 SQ.FT. XMRP = 1076.7000 IN.XO
LREF = 474.8000 IN YMRP = .0000 IN.YO
BREF = 936.6800 IN. ZMRP = 375.0000 IN.ZO
SCALE = .0405

PARAMETRIC DATA

BETA = -4.000 BDFLAP = -11.700
ELEVON = 5.000 MACH = .200
SPDBRK = 25.000 GRDPLN = .000
LNGRPS = 1.000 LNDGDR = 100.000

Q(PSF)(1) = 74.682 ALPHA (1) = .000 BETA = -4.0540 RN/L = 1.6000

SECTION (1)GEAR DYN PRESS DEPENDENT VARIABLE CP-RMS

TAP 103.0000107.0000129.0000135.0000157.0000203.0000207.0000229.0000235.0000257.0000261.0000

DI
.000 .0231 .0218 .0188 .0209 .0387 .0375 .0289 .0516 .0377 .0644 .2063

Q(PSF)(1) = 74.647 ALPHA (2) = 5.260 BETA = -4.0540 RN/L = 1.6000

SECTION (1)GEAR DYN PRESS DEPENDENT VARIABLE CP-RMS

TAP 103.0000107.0000129.0000135.0000157.0000203.0000207.0000229.0000235.0000257.0000261.0000

DI
.000 .0235 .0214 .0209 .0272 .0404 .0234 .0210 .0414 .0246 .0482 .1186

Q(PSF)(1) = 74.957 ALPHA (3) = 10.490 BETA = -4.0540 RN/L = 1.6000

SECTION (1)GEAR DYN PRESS DEPENDENT VARIABLE CP-RMS

TAP 103.0000107.0000129.0000135.0000157.0000203.0000207.0000229.0000235.0000257.0000261.0000

DI
.000 .0237 .0217 .0209 .0303 .0397 .0178 .0229 .0338 .0178 .0874 .0527

Q(PSF)(1) = 75.156 ALPHA (4) = 15.770 BETA = -4.0540 RN/L = 1.6000

SECTION (1)GEAR DYN PRESS DEPENDENT VARIABLE CP-RMS

TAP 103.0000107.0000129.0000135.0000157.0000203.0000207.0000229.0000235.0000257.0000261.0000

DI
.000 .0202 .0182 .0182 .0186 .0342 .0170 .0273 .0204 .0289 .1377 .0535

NAAL 737 OA143 ORB/B65- GR WELL RMS DYN PRESS (RFCC36)

Q(PSF)(1) = 75.204 ALPHA (5) = 18.920 BETA = -4.0540 RN/L = 1.6000

SECTION (1)GEAR DYN PRESS DEPENDENT VARIABLE CP-RMS

TAP	103.0000	107.0000	129.0000	135.0000	157.0000	203.0000	207.0000	229.0000	235.0000	257.0000	261.0000
DI	.000	.0212	.0175	.0181	.0192	.0375	.0247	.0320	.0437	.0423	.1390	.0752

NAAL 737 OA143 ORB/B65- GR WELL RMS DYN PRESS (RFCC37) (25 FEB 78)

REFERENCE DATA

SREF = 2690.0000 SQ.FT. XMRP = 1076.7000 IN.XO
LREF = 474.8000 IN YMRP = .0000 IN.YO
BREF = 936.6800 IN. ZMRP = 375.0000 IN.ZO
SCALE = .0405

PARAMETRIC DATA

BETA = -8.000 BDFLAP = -11.700
ELEVON = 5.000 MACH = .200
SPDBRK = 25.000 GRDPLN = .000
LNGRPS = 1.000 LNDGDR = 100.000

Q(PSF)(1) = 74.767 ALPHA (1) = .030 BETA = -8.0850 RN/L = 1.6000

SECTION (1)GEAR DYN PRESS DEPENDENT VARIABLE CP-RMS

TAP	103.0000	107.0000	129.0000	135.0000	157.0000	203.0000	207.0000	229.0000	235.0000	257.0000	261.0000
DI	.000	.0267	.0212	.0187	.0326	.0395	.0326	.0231	.0509	.0260	.0572	.2944

Q(PSF)(1) = 74.743 ALPHA (2) = 5.250 BETA = -8.0860 RN/L = 1.6000

SECTION (1)GEAR DYN PRESS DEPENDENT VARIABLE CP-RMS

TAP	103.0000	107.0000	129.0000	135.0000	157.0000	203.0000	207.0000	229.0000	235.0000	257.0000	261.0000
DI	.000	.0306	.0217	.0206	.0238	.0386	.0317	.0240	.0528	.0301	.0596	.1968

Q(PSF)(1) = 74.750 ALPHA (3) = 10.510 BETA = -8.0860 RN/L = 1.6000

SECTION (1)GEAR DYN PRESS DEPENDENT VARIABLE CP-RMS

TAP	103.0000	107.0000	129.0000	135.0000	157.0000	203.0000	207.0000	229.0000	235.0000	257.0000	261.0000
DI	.000	.0290	.0202	.0207	.0208	.0384	.0225	.0207	.0355	.0203	.0495	.1134

Q(PSF)(1) = 74.926 ALPHA (4) = 15.790 BETA = -8.0860 RN/L = 1.6000

SECTION (1)GEAR DYN PRESS DEPENDENT VARIABLE CP-RMS

TAP	103.0000	107.0000	129.0000	135.0000	157.0000	203.0000	207.0000	229.0000	235.0000	257.0000	261.0000
DI	.000	.0236	.0196	.0218	.0232	.0398	.0164	.0230	.0308	.0158	.0904	.0451

NAAL 737 OA143 ORB/B65- GR WELL RMS DYN PRESS (RFCC37)

Q(PSF)(1) = 74.972 ALPHA (5) = 18.950 BETA = -8.0860 RN/L = 1.6000

SECTION (1)GEAR DYN PRESS DEPENDENT VARIABLE CP-RMS

TAP	103.0000	107.0000	129.0000	135.0000	157.0000	203.0000	207.0000	229.0000	235.0000	257.0000	261.0000
DI	.000	.0210	.0185	.0200	.0217	.0374	.0157	.0251	.0180	.0220	.1220	.0482

NAAL 737 OA143 ORB/B65- GR WELL RMS DYN PRESS (RFCC38) (25 FEB 76)

REFERENCE DATA

SREF = 2690.0000 SQ.FT. XMRP = 1076.7000 IN.XO
LREF = 474.8000 IN YMRP = .0000 IN.YO
BREF = 936.6800 IN. ZMRP = 375.0000 IN.ZO
SCALE = .0405

PARAMETRIC DATA

SETA = 4.000 BDFLAP = -11.700
ELEVON = 5.000 MACH = .200
SPDBRK = 25.000 GRDPLN = .000
LNGRPS = 1.000 LNDGDR = 100.000

Q(PSF)(1) = 74.791 ALPHA (1) = .010 BETA = 4.0220 RN/L = 1.6000

SECTION (1)GEAR DYN PRESS DEPENDENT VARIABLE CP-RMS

TAP 103.0000107.0000129.0000135.0000157.0000203.0000207.0000229.0000235.0000257.0000261.0000

DI
.000 .0210 .0225 .0226 .0202 .0482 .0199 .0200 .0199 .0178 .0524 .0647

Q(PSF)(1) = 74.546 ALPHA (2) = 5.240 BETA = 4.0220 RN/L = 1.6000

SECTION (1)GEAR DYN PRESS DEPENDENT VARIABLE CP-RMS

TAP 103.0000107.0000129.0000135.0000157.0000203.0000207.0000229.0000235.0000257.0000261.0000

DI
.000 .0229 .0248 .0298 .0224 .0545 .0208 .0255 .0228 .0259 .1337 .0491

Q(PSF)(1) = 74.742 ALPHA (3) = 10.090 BETA = 4.0220 RN/L = 1.6000

SECTION (1)GEAR DYN PRESS DEPENDENT VARIABLE CP-RMS

TAP 103.0000107.0000129.0000135.0000157.0000203.0000207.0000229.0000235.0000257.0000261.0000

DI
.000 .0187 .0211 .0184 .0188 .0635 .0267 .0275 .0953 .0596 .1098 .0655

Q(PSF)(1) = 74.786 ALPHA (4) = 10.460 BETA = 4.0220 RN/L = 1.6000

SECTION (1)GEAR DYN PRESS DEPENDENT VARIABLE CP-RMS

TAP 103.0000107.0000129.0000135.0000157.0000203.0000207.0000229.0000235.0000257.0000261.0000

DI
.000 .0245 .0262 .0298 .0244 .0574 .0244 .0266 .0929 .0477 .1338 .0683

NAAL 737 OA143 ORB/B65- GR WELL RMS DYN PRESS (RFCC38)

Q(PSF)(1) = 74.865 ALPHA (5) = 15.730 BETA = 4.0220 RN/L = 1.6000

SECTION (1)GEAR DYN.PRESS DEPENDENT VARIABLE CP-RMS

TAP	103.0000	107.0000	129.0000	135.0000	157.0000	203.0000	207.0000	229.0000	235.0000	257.0000	261.0000
DI	.000	.0197	.0210	.0188	.0190	.0551	.0264	.0283	.0867	.0567	.1179	.0665

NAAL 737 OA143 ORB/B65- GR WELL RMS DYN PRESS (RFCC39) (25 FEB 76)

REFERENCE DATA

SREF = 2690.0000 SQ.FT. XMRP = 1076.7000 IN.XO
LREF = 474.8000 IN YMRP = .0000 IN.YO
BREF = 936.6800 IN. ZMRP = 375.0000 IN.ZO
SCALE = .0405

PARAMETRIC DATA

BETA = 8.000 BOFLAP = -11.700
ELEVON = 5.000 MACH = .200
SPDBRK = 25.000 GRDPLN = .000
LNGRPS = 1.000 LNDGDR = 100.000

Q(PSF)(1) = 74.683 ALPHA (1) = .020 BETA = 8.1160 RN/L = 1.6000

SECTION (1)GEAR DYN PRESS DEPENDENT VARIABLE CP-RMS

TAP 103.0000107.0000129.0000135.0000157.0000203.0000207.0000229.0000235.0000257.0000261.0000

D1
.000 .0214 .0271 .0337 .0195 .0936 .0257 .0271 .0367 .0297 .1013 .0531

Q(PSF)(1) = 74.875 ALPHA (2) = 5.250 BETA = 8.1160 RN/L = 1.6000

SECTION (1)GEAR DYN PRESS DEPENDENT VARIABLE CP-RMS

TAP 103.0000107.0000129.0000135.0000157.0000203.0000207.0000229.0000235.0000257.0000261.0000

D1
.000 .0245 .0346 .0256 .0242 .1074 .0275 .0276 .0567 .0415 .1111 .0689

Q(PSF)(1) = 74.962 ALPHA (3) = 10.460 BETA = 8.1160 RN/L = 1.6000

SECTION (1)GEAR DYN PRESS DEPENDENT VARIABLE CP-RMS

TAP 103.0000107.0000129.0000135.0000157.0000203.0000207.0000229.0000235.0000257.0000261.0000

D1
.000 .0229 .0303 .0234 .0230 .1144 .0303 .0315 .1054 .0668 .1339 .0783

Q(PSF)(1) = 74.939 ALPHA (4) = 15.740 BETA = 8.1160 RN/L = 1.6000

SECTION (1)GEAR DYN PRESS DEPENDENT VARIABLE CP-RMS

TAP 103.0000107.0000129.0000135.0000157.0000203.0000207.0000229.0000235.0000257.0000261.0000

D1
.000 .0214 .0248 .0233 .0225 .0930 .0256 .0285 .1056 .0597 .1264 .0687

NAAL 737 OA143 ORB/B65- GR WELL RMS DYN PRESS (RFCC39)

Q(PSF)(1) = 74.947 ALPHA (5) = 18.890 BETA = 8.1160 RN/L = 1.6000

SECTION (1)GEAR DYN PRESS DEPENDENT VARIABLE CP-RMS

TAP	103.0000	107.0000	129.0000	135.0000	157.0000	203.0000	207.0000	229.0000	235.0000	257.0000	261.0000
DI	.000	.0199	.0219	.0218	.0206	.0882	.0255	.0294	.1041	.0534	.1233	.0664